G. F. MILLS.

APPARATUS FOR BUILDING FOUNDATIONS AND WALLS.

APPLICATION FILED JUNE 16, 1911.

1,068,442. **Patented July 29, 1913.**

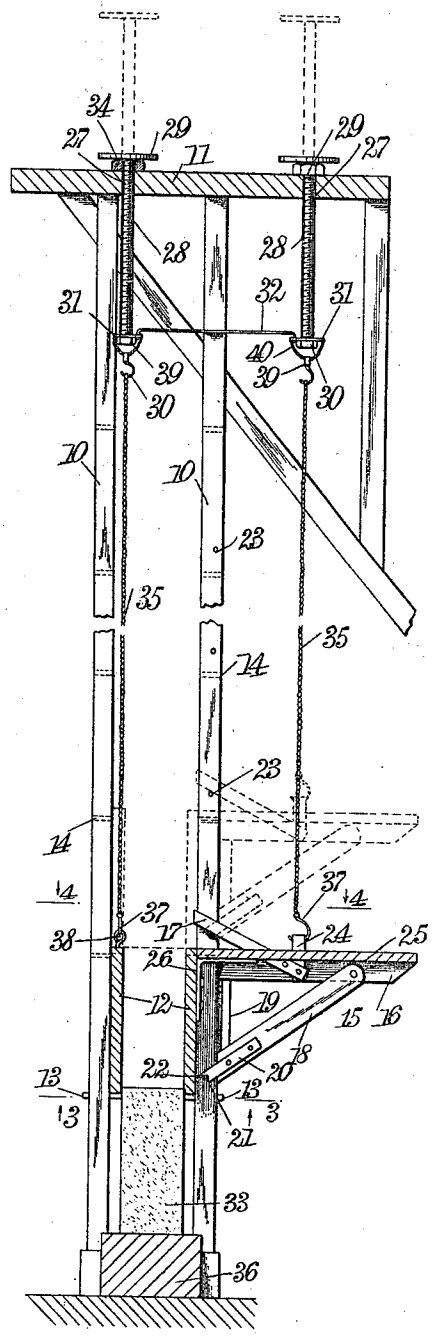

WITNESSES

Howard L. Thompson

E. B. Marshall

INVENTOR

George F. Mills

BY Munn & Co.

ATTORNEYS

COLUMBIA PLANOGRAPH CO., WASHINGTON, D. C.

UNITED STATES PATENT OFFICE.

GEORGE FLETCHER MILLS, OF COTTAGEHILL, FLORIDA.

APPARATUS FOR BUILDING FOUNDATIONS AND WALLS.

1,068,442. Specification of Letters Patent. Patented July 29, 1913.

Application filed June 16, 1911. Serial No. 633,464.

To all whom it may concern:

Be it known that I, GEORGE F. MILLS, a citizen of the United States, and a resident of Cottagehill, in the county of Escambia and State of Florida, have invented a new and Improved Apparatus for Building Foundations and Walls, of which the following is a full, clear, and exact description.

My invention relates to the construction of foundations and walls, and it has for its object to provide an apparatus having forms, spaced apart, between which the concrete may be deposited, a bracket being connected with one of the forms for carrying a platform, which is used when the concrete is deposited, there being means for raising the forms and the bracket simultaneously.

Still other objects of the invention will appear in the following complete description, in which the preferred form of the invention is disclosed.

The drawing is a sectional elevation of the invention.

By referring to the drawings, it will be seen that guides 10 are provided, which are spaced apart, as shown in the drawing, these guides are connected at their upper terminals by a platform 11, which extends beyond the guides. Disposed between the guides, and adapted to slide against the guides are the forms 12, which may be supported by the pins 13, which are inserted through the openings 14 in the guides 10. Brackets 15 are provided, the said brackets having horizontal members 16, which fit against the outer guides 10, loops 17 being provided, which extend around the said outer guides 10, and which have their terminals secured to the said horizontal members 16.

It will be seen by referring to the drawing, that these loop members 17 extend upwardly obliquely, so that they may bear against the outer guides 10, and assist in supporting the horizontal members 16 of the brackets 15. Secured to and extending downwardly from the horizontal members 16, in the direction of the guides 10, there are braces 18, these braces 18 resting against the said guides 10. Disposed against the guides 10, and secured to the horizontal members 16, and also to the braces 18, there are struts 19. Plates 20 are secured to the sides of the braces 18, the said plates 20 extending beyond the said braces, and having recesses 21, in which may be disposed the pins 22, which are inserted in the orifices 23 in the outer guides 10.

An upwardly extending eye member 24 is secured to each of the horizontal members 16 of the braces 15, platforms 25 being mounted on the horizontal members 16, and these platforms 25 are secured to the outer forms 12, by angle irons 26. There are openings 27 in the platform 11, and through these openings extend screws 28, the said screws 28 meshing in the threaded members 29, which rest on the platform 11. Nuts 30 are permanently secured to the lower terminals of the screws 28, preferably by riveting, the said nuts forming heads, which support the plates 31, which are mounted freely on the screws 28. Each pair of the plates 31 is connected by a link 32, the said links preventing the rotation of either of the said plates 31.

It will be understood that the concrete 33 is deposited between the forms 12 from the platforms 25, after which the platforms are raised by turning the screws 28, by their heads 34, relatively to the threaded members 29, and as the plates 31 are connected by means of the chains 35, one with the inner form 12, and the other with the horizontal member 16, the said inner form 12, the outer form 12, and the bracket 15, will be raised relatively to the foundation 36. When the forms have been raised, the pins 13 may be used to support the forms, while the chains are readjusted.

In the drawings I have shown the chains with hooks 37, one of which engages the eye member 24, secured to the horizontal members 16, on the brackets 15, the other hook 37 engaging the eye 38 on the inner form 12. When the bracket 15 is raised, it will carry with it the platform 25 which is mounted thereon, and also the outer form 12, which as has been described, is secured to the said platform 25 by means of the angle iron 26. The upper terminals of the chains 35 are secured to the hooks 39, supported on the chains 40, which are secured to the plates 31.

Having thus described my invention, I claim as new, and desire to secure by Letters Patent:

In an apparatus for building walls guides spaced apart, a platform having openings therein, screws disposed through the openings, and having heads on their lower ter-

minals, thread members on the platform with which the screws mesh, plates mounted on the heads, means for preventing the plates from turning relatively to each other, and depending supports secured to the plates.

In testimony whereof I have signed my name to this specification in the presence of two subscribing witnesses.

GEO. FLETCHER MILLS.

Witnesses:
E. PARKER,
S. BROWN.

Copies of this patent may be obtained for five cents each, by addressing the "Commissioner of Patents, Washington, D. C."