June 23, 1925. 1,543,193

C. E. SMITH

TYPEWRITING MACHINE

Filed Nov. 8, 1924 2 Sheets-Sheet 1

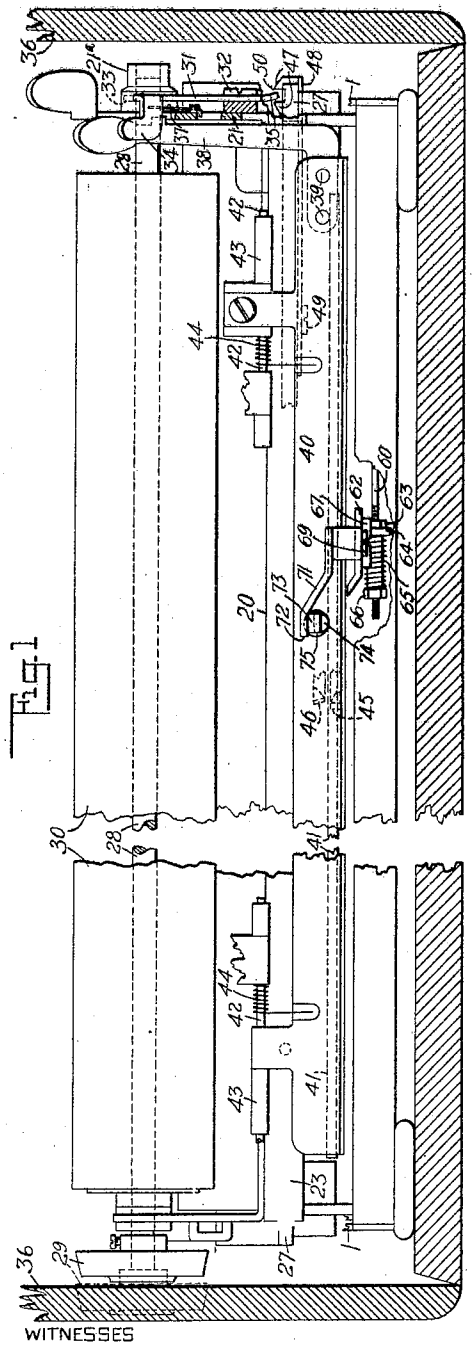

Fig. 1

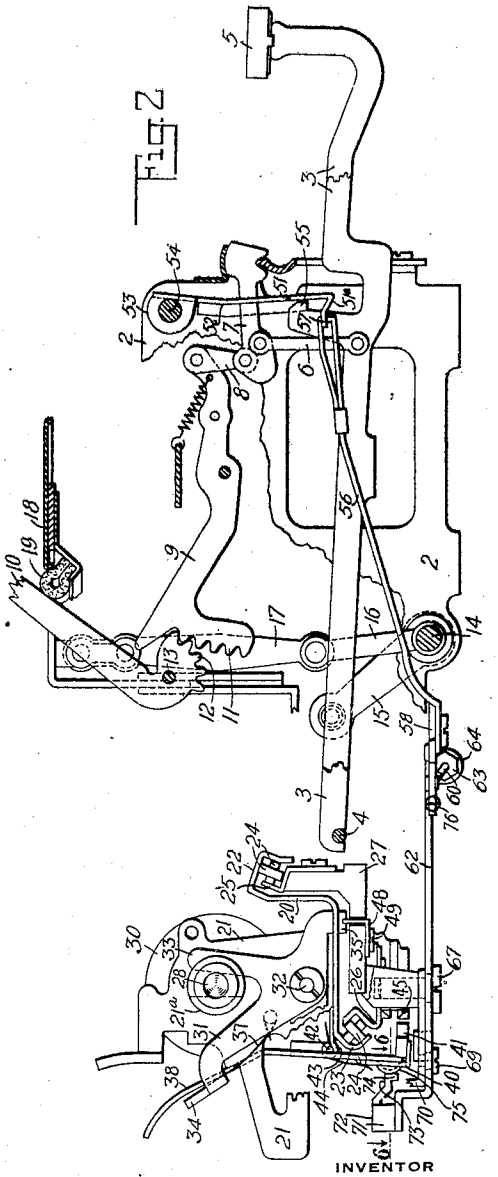

Fig. 2

WITNESSES

E. M. Wells.

L. Nelson.

INVENTOR

Charles E. Smith

BY

Jacob Felbel

ATTORNEY

June 23, 1925. 1,543,193

C. E. SMITH

TYPEWRITING MACHINE

Filed Nov. 8, 1924 2 Sheets-Sheet 2

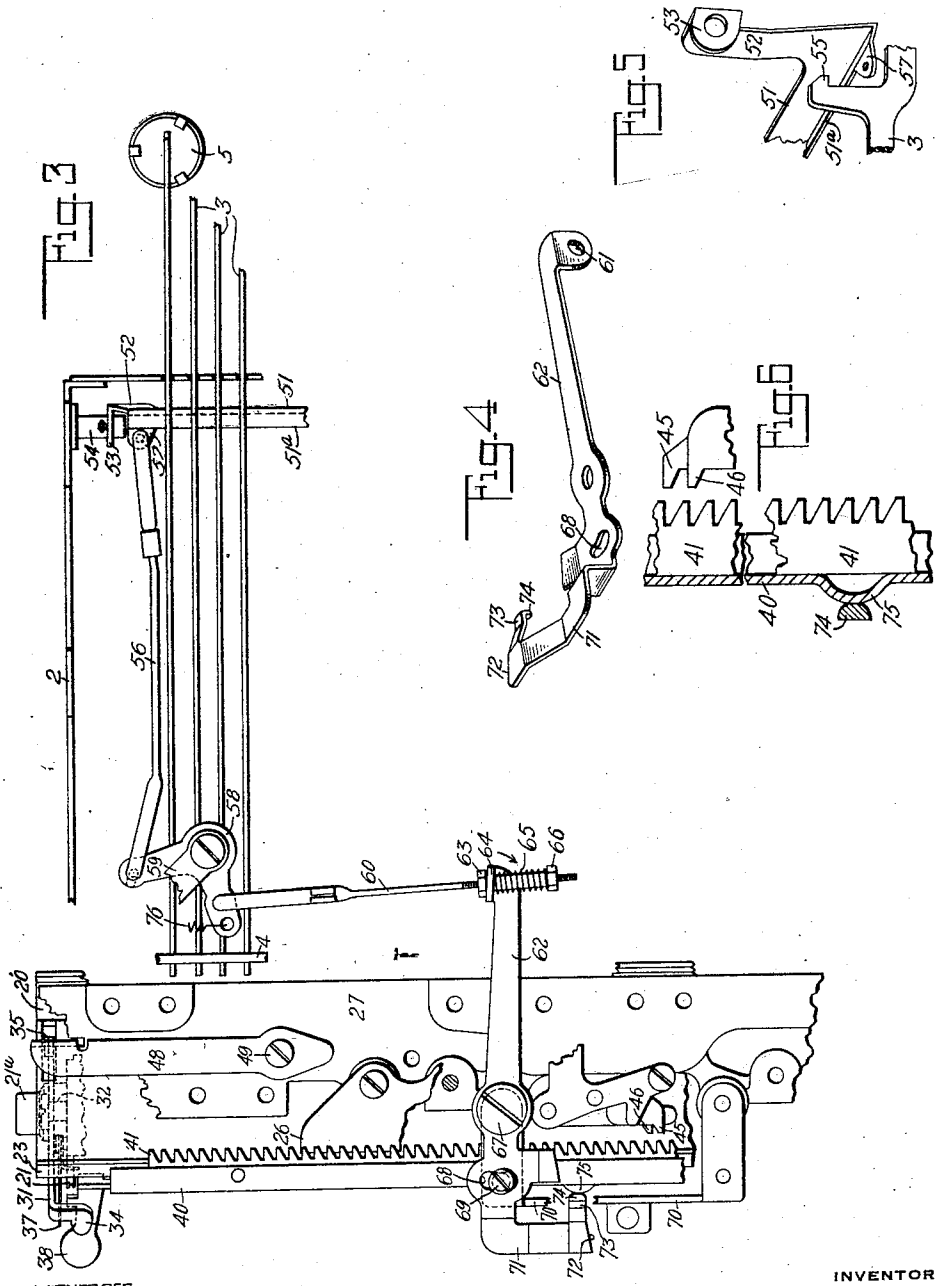

WITNESSES

E. M. Wells.

L. Nelson.

INVENTOR

Charles E. Smith

BY

Jacob Felbel

ATTORNEY

Patented June 23, 1925. 1,543,193

UNITED STATES PATENT OFFICE.

CHARLES E. SMITH, OF BROOKLYN, NEW YORK, ASSIGNOR TO REMINGTON TYPEWRITER COMPANY, OF ILION, NEW YORK, A CORPORATION OF NEW YORK.

TYPEWRITING MACHINE.

Application filed November 8, 1924. Serial No. 748,515.

To all whom it may concern:

Be it known that I, CHARLES E. SMITH, a citizen of the United States, and resident of the borough of Brooklyn, city of New York, in the county of Kings and State of New York, have invented certain new and useful Improvements in Typewriting Machines, of which the following is a specification.

My invention relates to typewriting and like machines and more particularly to portable machines.

In such machines it is common to condition them to prevent injury to parts thereof while they are being carried or transported, and to recondition them again for use. In some such machines it is possible to operate the printing instrumentalities to strike the platen or the paper thereon before the machine has been fully conditioned for use. This may result in destroying or marring the work sheet before the operator observes that the machine is not fully conditioned to proceed with the work.

The main object of my invention is to provide, in such a machine, improved means for overcoming this objection, and to compel a complete conditioning of the machine for use before the operator is enabled to operate the printing instrumentalities.

To the above and other ends which will hereinafter appear, my invention consists in the features of construction, combinations of devices and arrangements of parts hereinafter described and particularly pointed out in the claims.

In the accompanying drawings, wherein like reference characters indicate corresponding parts in the different views,

Figure 1 is a rear elevation with parts in section of a Remington Portable machine embodying my invention, the machine being shown enclosed within its carrying case.

Figure 2 is a fragmentary vertical fore-and-aft sectional view of the machine with parts omitted, the machine being shown only partly conditioned for use.

Figure 3 is a detail fragmentary bottom plan view of the machine with parts omitted.

Figure 4 is a detail perspective view of the key locking lever modified in accordance with my present invention.

Figure 5 is a detail fragmentary perspective view showing a portion of one of the printing key levers and the locking bar with which it coacts to lock the printing instrumentalities against printing operation.

Figure 6 is an enlarged detail fragmentary sectional view taken on the line 6—6 of Figure 2 and looking in the direction of the arrows at said line.

I have shown my invention embodied, in the present instance, in a Remington Portable machine, in which the invention may be readily included with but a very slight change in the existing structure.

In the Remington Portable machine in order to condition the machine for use, the type bars must first be expanded by one operation to a position where they are free to strike against a platen, and the center lock for the carriage must be hand released and the escapement rendered effective, by another operation. It sometimes happens that the operator will expand the type bars and forget to hand release the center lock and render the escapement effective to restrain the movement of the carriage. The operator may then proceed to write and not discover that the carriage cannot be fed until the work sheet is marred, mutilated or destroyed. In accordance with my invention, as it is exemplified in the present instance, this difficulty is overcome by automatically locking the printing keys when the hand controlled center lock is rendered effective and the carriage is centered and the escapement is rendered ineffective to restrain the carriage, and by automatically releasing said keys when the center lock is rendered ineffective and the escapement rendered effective to restrain the carriage. It follows, therefore, that the printing keys cannot be actuated if the center lock is hand positioned to lock the carriage and render the escapement ineffective to restrain the carriage, thereby notifying the operator that the machine must be further conditioned for use by releasing the center lock and re-establishng the escapement in operative condition.

Various parts of the present construction are disclosed and claimed in the application of Joseph B. Holden, filed Oct. 9, 1924, Sr. No. 742,528, the claims of this case being restricted to features not disclosed in said Holden application.

In the ordinary operation of a typewriting machine it is necessary at times for an operator when making corrections to crowd in

several characters in a space formerly occupied by fewer characters. This is sometimes done by releasing the carriage by the ordinary release key and moving the carriage by one hand to, and holding it at, the desired fractional letter space point to insert a character, while the operator, with the other hand, strikes the appropriate key to print the desired character to be inserted at the point in question, and so on with the remaining characters to be inserted. The main object of the present invention is to accomplish the general ends hereinbefore pointed out and yet enable crowded insertions to be made in the manner indicated above, as will hereinafter more clearly appear.

In the accompanying drawings I have shown only so much of a Remington Portable machine as is necessary to arrive at an understanding of my invention in its embodiment therein.

The machine comprises an outer sheet metal frame 1 and an inner frame 2, which latter supports most of the working parts of the machine. Each type action comprises a key lever 3 fulcrumed at 4 and provided with a key 5. Each key lever is connected through a link 6, sub-lever 7, second link 8, and second sub-lever 9 with a type bar 10. Operative connection is established between each sub-lever 9 and the associated type bar by segmental rack sections 11 and 12. The type bars are all mounted on a pivot wire 13, on which they are adapted to be turned from a collapsed locked position to the effective position for use, shown in Fig. 2, when ordinarily they may be actuated to strike downwardly against the top face of the platen always maintained in the path thereof. The means for effecting this conditioning of the type bars for use or for transportation of the machine, comprises a rock shaft 14, controlled by a hand actuated crank arm 15. This rock shaft also carries crank arms 16, pivoted to links 17; the latter being pivoted at their upper ends to a vertically shiftable support 18, having a pad 19 on which the type bars rest.

The non-folding carriage of this machine is mounted on its support in the usual manner to travel from side to side of the machine, and to shift with the support fore-and-aft of the machine in the case-shifting movements of said support; the carriage always supporting the platen in position for use. That portion of the case shift frame on which the carriage support is mounted, and the means for shifting it to change the case position of the platen, are of the usual construction, but are not shown in order to avoid confusion and afford a better illustration of other parts of the construction. The carriage comprises a body plate or portion 20 to which end plates 21 are secured. The plate 20 is formed with bearing portions 22 and 23 in which crossed bearing rollers 24 are received. Said rollers bear against companion tracks 25 and 26 on the carriage support 27, and thus support the carriage for traveling movement and always maintain it in operative position. A platen spindle 28 is mounted to turn and to slide longitudinally in bearings in the end plates 21, the spindle being provided at one end with a finger wheel 29. A platen 30 is mounted on the spindle 28 to turn therewith and permit a longitudinal shifting movement of the spindle independently of the platen, by reason of a pin and slot connection (not shown) between the platen and shaft. This feature, and the co-operation of the spindle with the center lock for the carriage, and the release of the carriage by the center lock, to be hereinafter described, are fully disclosed and are claimed in the co-pending application of Joseph B. Holden, Sr. No. 547,128, filed March 27, 1922.

A hand controlled lever 31 is pivoted at 32 on the left-hand end plate 21 of the carriage. This lever comprises three arms, one of which constitutes a locking finger or member 33, whereas the second terminates in a finger piece 34, and the third terminates in a locking finger or member 35. The locking finger 33 passes into a transverse slot in the bearing member 21ª for the left-hand end portion of the platen spindle 28. In one position of the finger 33, it extends across the bore of said slotted bearing member 21ª and in the path of the spindle, to prevent a longitudinal displacement of the latter and the finger wheel 29 from the dotted to the full line position shown in Figure 1. From an inspection of this figure, it will be seen that when the finger wheel 29 is drawn out to the dotted line position for use, it extends into the path of a side wall of the carrying case 36 and prevents the cover from being closed. The operator is compelled therefore to shift the lever 31 from the position where the finger 33 thereon locks the spindle 28 against longitudinal movement, to the Fig. 2 position before the finger wheel 29 can be shifted from its obstructing position. In this last mentioned position the spindle with finger wheel is free to be shifted from the dotted to the full line position in Figure 1. When thus shifted, the spindle extends across the path of return movement of the locking finger 33, effected by a spring 37, and locks the lever 31 in the Fig. 2 position. The effect of this is to leave the carriage free from restraint of its escapement mechanism and to maintain the center lock effective. Thus it will be seen that the finger piece 34 is bent

off laterally from the lever 31 and extends behind the ordinary carriage release lever or arm 38. The lower end of this arm is secured at 39 (Fig. 1) to a sheet metal plate or controlling member 40 that extends substantially throughout the length of the carriage and constitutes a support for the feed rack 41 of the carriage escapement mechanism. The plate, controlling member, or rack-support 40 is pivoted at 42 for independent movement on bracket arms 43 secured to the body plate 20 of the carriage. Springs 44 bear against the plate 40 and normally hold the plate at the limit of its forward movement with the teeth of the feed rack engaging the feed dog 45. When the dog 45 is thus engaged, a printing operation is effective, through a train of connections not shown, to lower the feed dog 45 and bring the holding dog 46 into engagement with the rack, and during the return movement of the dogs the carriage advances one letter space. When, however, the lever 31 is locked in the Fig. 2 position the finger piece 34 co-acting with the carriage release lever 38 holds the feed rack 41 disengaged from the normally engaged feed dog 45, as shown. This frees the spring-propelled carriage from the restraint of its escapement mechanism and relieves the feed dogs and rack from any injury that might result from shocks or jars from the carriage in transporting the machine in its case. Since the carriage is free from restraint of its escapement mechanism at this time, it is desirable to provide other means for holding the carriage. The center lock, one member of which is formed by the locking finger 35, is provided for this purpose. When the lever 31 is moved to and locked in the Fig. 2 position, as explained, the locking finger 35 is projected down through a slot in the carriage plate 20 and into effective position. In this position the lower edge of the locking finger 35 has a path of movement with the carriage in the normal line of travel of the latter which will bring it into co-operation with one or the other of two oppositely beveled faces 47 on the upstanding part of a companion spring locking member 48, secured by a screw 49 to the bottom of the carriage support 27. A locking slot or notch 50 is located between the two bevel edges 47 on the locking member 48. When the finger 35 is locked in its projected, Fig. 2, position, and the carriage is moved in either direction to center it in its line of travel, the finger 35 will be seated in the locking notch 50 when said centered position is reached, thus holding the carriage against movement either to right or left. The machine will thus be maintained with the feed rack released and the carriage center-locked as long as the finger wheel remains in the compacted, full line position, shown in Fig. 1. This conditions the machine for enclosure and transportation within its carrying case after the type bars have been collapsed. To recondition the machine for use, it is merely necessary to expand the type bars, as shown in Fig. 2, and pull the finger wheel 29 to the dotted line position in Fig. 1, thereby freeing the lever 31 and bringing about a release of the center lock and a re-engagement of the feed rack with the feed dog 45. However, it sometimes occurs that the operator in conditioning the machine for use will expand the type bars but will forget to pull out the finger wheel 29 before attempting to write on the machine. In the Remington Portable machine the printing keys are free to be actuated at this time to cause the type bars to strike the platen or the paper thereon even though the carriage cannot be moved from its centered position. In accordance with the present invention this objection is overcome by locking the printing keys against actuation until the center lock has been released and the rack re-engaged with the feed dog 45. This compels the operator to pull out the finger wheel 29 to effect this result before the printing keys can be actuated. The act of pulling out the finger wheel 29 and producing the above mentioned result is effective to automatically release the locked printing keys, as will now appear.

The detail construction thus far described is part of the regular equipment of the Remington Portable machine. In addition said machine is equipped with line lock mechanism comprising a locking bar 51 having arms 52 at the ends thereof. These arms have ears 53 perforated to receive pins 54 which project inwardly from the side plates of the inner frame 2 of the machine. In this manner the locking bar is pivotally mounted to swing fore-and-aft of the machine. The lower edge of this bar is bent rearwardly to form a flange 51ª which, when the bar is in locking position shown in Fig. 2, extends beneath the forwardly extending bills 55 of the hook-like projections on the printing key levers. While the locking bar does not prevent all depressions of the key levers, it does, when in effective position, prevent a full depression of any of the key levers and prevents a movement of any type bar to printing position. A link 56 extends fore-and-aft of the machine and is connected at one end to a perforated ear 57 on the locking bar, and at the other end to one arm of a bell crank lever 58. This lever is mounted on a bracket arm 59 secured to a fixed part of the machine. The other arm of the lever 58 is connected to one end of a link 60 that extends transversely of the machine, and at its other end projects through an opening 61 in a lever 62, shown in detail in Fig. 4. A nut 63 is received on the inner

threaded end portion of the link 60 and bears against one side of the ear 64 of the lever 62. A coiled expansion spring 65 surrounds the link 60 and bears at one end against the ear 64, and at its other end against a nut 66 on the link 60. Motion is transmitted from the lever 62 to the link 60 and the parts controlled thereby through the spring 65. The lever 62 is pivoted at 67 on the carriage support 27 and extends rearwardly of its fulcrum where it is slotted at 68 to receive a headed screw 69 threaded into a supporting bracket 70, and operating to limit the motion of the lever 62. The rear end of the lever 62 is provided with an off-set arm 71 that terminates in an edge 72, with which the usual adjustable line lock actuating member (not shown) on the carriage co-acts to turn the lever 62 when the carriage reaches the end of a line. This motion is transmitted through the intermediate train of connections to the locking bar 51 to move it to the locking position, shown in Fig. 2.

The key locking construction as thus far described constitutes part of the usual line lock equipment of the Remington Portable machine. In accordance with my invention, as shown in the present embodiment thereof, I have provided a forwardly extending finger 73 on the outer end of the arm 71, said finger terminating in a rounded contact 74. This contact, as will be seen from an inspection of Fig. 3 is located to one side of a vertical fore-and-aft plane extending through the body portion of the lever 62 and the pivot 67 thereof. The contact 74 is located, in the present instance, in the rear of and normally free from contact with, the plate or feed rack support 40. The feed rack support 40 is provided or formed with a rearwardly extended rounded proturberance, contact, actuating projection, or interponent 75. This contact is located about midway of the rack support and has a path of travel with the carriage which will bring it into alignment or register with the contact 74 when the carriage is centered in its line of travel, and where the center lock is effective to hold the carriage centered. At all other points or letter space positions in the travel of the carriage the contact 75 is out of register with the contact 74. The construction and arrangement of the parts are such that when the contacts 74 and 75 are out of register the release of the feed rack, by either the release key 38 or the center lock key 34, will be ineffective to actuate the lever 62 and the key lock controlled thereby. When, however, the carriage is centered or in position where the center lock is effective to lock the carriage, the interponent 74 will be brought into register with the contact 75. A forward movement of the center lock key 34 at this time is effective to move the locking finger 35 down into the slot 50, to move the rack support or member 40 rearwardly to disengage the rack from the dog 45, and through the registering contacts 74 and 75 actuate the member 62 to cause it to turn on its pivot in the direction of the curved arrow in Fig. 3, and to move the locking bar 51 to effective position. The parts will remain in this condition as long as the feed rack is maintained disengaged from the feed dog 45. When the rack is returned to its normal position to re-engage said dog 45, the lever 62 and the locking bar 51 will be returned to normal position by a returning spring 76 connected to the bell crank lever 58.

By this arrangement the carriage release key may be actuated at any one of, say, 84 of the 85 letter space positions of the carriage without actuating the key lock, so that characters may be crowded in in the manner hereinbefore described. Yet said key lock will be actuated by a throwing out of the feed rack by the center lock key at the only point in the travel of the carriage where the key lock under control of the center lock is necessary for the purpose of the present invention; that is to say, when the carriage is centered in position to be held by the center lock, at which time it is also desired to lock the rack released.

From an inspection of Fig. 6, it will be seen that the co-acting faces of the contacts 74 and 75 are rounded. It will be understood therefore that if the operator should actuate the key 34 when the carriage is at either side of its centered position, and run the carriage to such position to center lock it, the following operation will result: An actuation of the key 34 while the carriage is off-centered will not result in actuating the key lock. When, however, the carriage is moved to its centered position while pressure is maintained on the key 34, the projected contact 75 will act with a camming effect on the contact 74 and actuate the key lock just as the carriage reaches the centered position and the center lock engages. It will be understood therefore that the operation of the key lock by the center lock or the carriage release key is dependent on the position of the carriage in its line of travel and that at only one point in this line can the keys be locked by such means, and that point is where the center lock is active or effective.

I have hereinbefore noted that there is only one point in the line of travel of the carriage where the key lock will be actuated by the carriage release key 38. If, however, the operator should find it necessary to crowd in a letter at this point, it is merely necessary to free the release key permitting the rack to re-engage the dog when the carriage is at the selected point; or at the

nearest letter space position to the left thereof if the insert is in a fractional space position. If the insert is to be made at the exact letter space position in question the operator has merely to operate the desired printing key after the engagement of the rack has been effected. If the insert is to be made at a fractional space position, then the carriage is forced to the right to such position without actuating the carriage release key. While the carriage is held by the operator in such position with one hand the other hand may actuate the requisite printing key to insert the character to be printed. The backward movement of the carriage to the right referred to above may be effected either by an end pressure exerted on the carriage or by an operation of the usual back spacing key. It will be understood, however, that it is only when the carriage is at this one point in its line of travel that it is necessary to effect an insert in this manner. At all other points an insert may be effected by a direct movement of the carriage thereto and while the carriage release key is held in its actuated position as previously described.

From the foregoing it will be understood that whenever the carriage is centered, and the lever 31 is locked in the Fig. 2 position to release the feed rack and render the center lock effective, as shown, the printing keys will be locked against printing actuation, even though the type bars be expanded ready for use. When, however, the finger wheel 29 is pulled out to the dotted line position, this will release the locked lever 31 and it will be returned by its spring 37 to normal position. The effect of this is to release the center lock, return the feed rack to dog-engaging position and move the key locking bar 51 to releasing position, so that the machine is fully conditioned for use, assuming that the type bars have been moved to expanded position. But until the machine has thus been fully conditioned for use, the type bars cannot be actuated to print on the work sheet.

From the foregoing description it will be understood that by my present invention I have provided, with but slight change, a construction which embodies a train of operative connections intermediate both finger pieces 34 and 38 and the key lock, and that such connections include an interponent 75 moved by the carriage at a given point only in its line of travel to a position that renders said train of connections effective to transmit movement from either of said finger pieces to said key lock to actuate it and thereby prevent printing actuation of the printing keys.

I am aware that various changes may be made without departing from my invention as it is defined in the accompanying claims.

What I claim as new and desire to secure by Letters Patent is:—

1. In a typewriting or like machine, the combination of a carriage, printing keys, a lock for preventing a printing actuation of said keys, a finger piece for actuating said lock to render it effective, and means which render said finger piece effective to thus actuate said lock only when the carriage is at a given point in its travel.

2. In a typewriting or like machine, the combination of a carriage, printing keys, a lock for preventing a printing actuation of said keys, a finger piece, and means which render said finger piece effective to actuate said lock only when the carriage is centered in its line of travel.

3. In a typewriting or like machine, the combination of a carriage, a center lock for locking the carriage centered in its line of travel, printing keys, a key lock for locking said keys against printing actuation, and means by which the center lock is rendered effective to control the key lock only when the carriage is centered to render the center lock active.

4. In a typewriting or like machine, the combination of a carriage, escapement mechanism therefor, printing keys, a lock for locking said keys against printing actuation, carriage releasing means for freeing the carriage from restraint of the escapement mechanism, and means which enable the carriage releasing means to control said lock only when the carriage is at a given point in its travel.

5. In a typewriting or like machine, the combination of a carriage, escapement mechanism therefor, a center lock for locking the carriage centered in its line of travel, printing keys, a key lock for locking said keys against printing actuation, means which enable the center lock to free the carriage from restraint of its escapement mechanism, and means which enable said center lock to control said key lock only when the carriage is centered in its line of travel.

6. In a typewriting or like machine, the combination of a carriage, printing keys, a lock therefor, a finger piece displaceable from normal position for rendering said lock effective, and means dependent on the position of the carriage in its line of travel to determine the effectiveness or ineffectiveness of said displaceable finger piece to actuate said lock to render it effective.

7. In a typewriting or like machine, the combination of a carriage, printing keys, a lock therefor, a finger piece, and a train of operative connections intermediate said finger piece and lock including an interponent moved by the carriage at a given point in the line of travel of the latter to a position that renders the train of con-

nections effective to transmit movement from said finger piece to said lock to actuate it and thereby prevent printing actuation of said keys.

8. In a typewriting or like machine, the combination of a carriage, printing keys, a lock therefor, a finger piece, and a train of operative connections intermediate said finger piece and lock including a member carried by the carriage to travel therewith and receive an independent movement thereon and which is given such independent movement by said finger piece, said member carrying a contact that registers with a coacting member only at a given point in the travel of the carriage and only at such point transmits the independent movement of the carriage carried member to its coacting member to actuate the lock.

9. In a typewriting or like machine, the combination of a carriage, printing keys, a lock therefor, a key carried by the carriage and operative to release it from restraint of its feed mechanism, and means capable of being controlled by said key at only one point in the line of travel of the carriage for actuating said lock.

10. In a typewriting or like machine, the combination of a carriage, escapement mechanism therefor, a center lock for locking the carriage centered in its line of travel, printing keys, locking means for locking said keys against printing actuation, a controlling key, and means controlled thereby for releasing the carriage from the restraint of its escapement mechanism, for rendering said center lock effective and for actuating said key locking means to prevent printing actuation of the printing keys, the construction and arrangement of the parts being such as to render said controlling key capable of actuating said key locking means at only one point in the travel of the carriage.

11. In a typewriting or like machine, the combination of a carriage, escapement mechanism therefor comprising a releasable rack, which when released frees the carriage from restraint of its escapement mechanism, printing keys, locking means for preventing printing actuation of said keys, and means for actuating said locking means to lock the keys when the rack is released and the carriage is centered in its line of travel but ineffective to actuate the locking means at other points in the travel of the carriage.

12. In typewriting or like machine, the combination of a carriage, escapement mechanism therefor, a center lock for locking the carriage centered in its line of travel, printing keys, locking means for locking said keys against printing actuation, a controlling key, and means controlled thereby for releasing the carriage from the restraint of its escapement mechanism, for rendering said center lock effective and for actuating said key locking means to prevent printing actuation of the printing keys, a return movement of said controlling key to normal position restoring the carriage to control of its escapement mechanism, rendering the center lock ineffective and releasing the printing keys from restraint of their locking means, the construction and arrangement of the parts being such that the effectiveness of the said controlling key to actuate the key lock is determined by the position of the carriage in its line of travel.

13. In a typewriting or like machine, the combination of a carriage, escapement mechanism therefor including a releasable feed rack for freeing the carriage from restraint of the escapement mechanism, printing keys, and locking means for said keys operative by the releasing movement of said feed rack only if the carriage is centered in its line of travel.

14. In a typewriting or like machine, the combination of a carriage, escapement mechanism therefor, printing keys, and a lock for locking said keys against printing actuation including a controlling member carried by the carriage support and a second hand-actuated controlling member carried by the carriage and co-operative with said first mentioned controlling member at only a given point in the travel of the carriage to actuate the lock and also operative at the same time to free the carriage from restraint of its escapement mechanism.

15. In a typewriting or like machine, the combination of a carriage, a center lock for locking the carriage centered in its line of travel, printing keys, a lock for locking said keys against printing actuation, a finger piece carried by and movable on the carriage, and means controlled by said finger piece for rendering said center lock effective and for actuating said key lock to prevent a printing operation of said keys, the construction and arrangement of the parts being such that said finger piece is effective on said key lock only when the carriage is centered in its line of travel.

16. In a typewriting or like machine, the combination of a carriage, escapement mechanism therefor, a center lock for locking the carriage centered in its line of travel, printing keys, a lock for locking said keys against printing actuation, a finger piece carried by and movable on the carriage, and means controlled by said finger piece for rendering said center lock effective for actuating said key lock to prevent a printing operation of said keys and for freeing the carriage from restraint of its escapement mechanism, the effectiveness of said finger piece to actuate the key lock depending on the position of the carriage in its line of travel.

17. In a typewriting or like machine, the combination of a carriage, a plate carried by and extending lengthwise in the direction of the travel of the carriage and movable independently thereon, means for controlling the independent movement of said plate, escapement mechanism for the carriage, printing keys, a lock for locking said keys against printing actuation, and means that enable the independent movement of said plate to release the carriage at any point in its travel from restraint of its escapement mechanism but to actuate said lock to prevent printing actuation of said keys only in the event that the carriage is centered in its line of travel.

18. In a typewriting or like machine, the combination of a carriage, a plate carried by and extending lengthwise in the direction of the travel of the carriage and movable thereon, a center lock for locking the carriage centered in its line of travel, printing keys, and key locking means controlled by said plate only when the carriage is centered in its line of travel.

19. In a typewriting or like machine, the combination of a carriage, a plate carried by and extending lengthwise in the direction of the travel of the carriage and independently movable thereon, an actuating projection at a given point in the length of said plate, escapement mechanism for the carriage releasable to free the carriage from restraint thereof by an independent movement of said plate, a center lock for locking the carriage centered in its line of travel, printing keys, and key locking means controlled by said actuating projection.

20. In a typewriting or like machine, the combination of a carriage, a plate carried by and extending lengthwise in the direction of the travel of the carriage and movable independently thereon, an actuating projection carried by said plate substantially midway in the length thereof, escapement mechanism for the carriage including a feed rack carried by said plate and which frees the carriage from restraint of such escapement mechanism by the independent movement of said plate, a center lock for locking the carriage against movement in either direction in its line of travel, printing keys, and key locking means controlled by said actuating projection, whereby a movement of the center lock to effective position is operative to release the carriage from restraint of its escapement mechanism but is operative to render the key lock effective only in the event that the carriage is centered in its line of travel.

21. In a typewriting or like machine, the combination of a carriage, a platen carried thereby, a finger wheel for said platen movable into and out of compact position, a center lock for locking the carriage in its line of travel and which includes a finger piece for moving it to effective position, means by which the finger wheel is prevented from being moved to the compact position when said center lock is ineffective and which retains the center lock effective when the finger wheel is in compact position, printing keys, a lock therefor, and means for operatively connecting the center lock and key lock only when the carriage is centered in its line of travel so that at this time only is the center lock effective on the key lock.

22. In a typewriting or like machine, the combination of a carriage, printing keys, line lock mechanism for locking said keys against printing operation when the carriage reaches the end of a line, a center lock for locking the carriage centered in its line of travel, and means by which said center lock is rendered effective to actuate said line lock mechanism only in the event that the carriage is centered in its line of travel, whereby said keys will be maintained locked as long as the center lock is effective and will be released when said center lock is released.

Signed at the borough of Manhattan, city of New York, in the county of New York and State of New York, this 30th day of October, A. D. 1924.

CHARLES E. SMITH.

Witnesses:

E. M. WELLS,

L. NELSON.