(12) INTERNATIONAL APPLICATION PUBLISHED UNDER THE PATENT COOPERATION TREATY (PCT)

(19) World Intellectual Property Organization
International Bureau

(43) International Publication Date
31 October 2019 (31.10.2019)

WIPO | PCT

(10) International Publication Number
WO 2019/207497 A2

(51) International Patent Classification:
Not classified

(21) International Application Number:
PCT/IB2019/053372

(22) International Filing Date:
24 April 2019 (24.04.2019)

(25) Filing Language: English

(26) Publication Language: English

(30) Priority Data:
62/662,889 26 April 2018 (26.04.2018) US

(72) Inventor; and
(71) Applicant: MINX, Timo [DE/DE]; Schubertstrasse 17, 40699 Erkrath (DE).

(81) Designated States *(unless otherwise indicated, for every kind of national protection available)*: AE, AG, AL, AM, AO, AT, AU, AZ, BA, BB, BG, BH, BN, BR, BW, BY, BZ, CA, CH, CL, CN, CO, CR, CU, CZ, DE, DJ, DK, DM, DO, DZ, EC, EE, EG, ES, FI, GB, GD, GE, GH, GM, GT, HN, HR, HU, ID, IL, IN, IR, IS, JO, JP, KE, KG, KH, KN, KP, KR, KW, KZ, LA, LC, LK, LR, LS, LU, LY, MA, MD, ME, MG, MK, MN, MW, MX, MY, MZ, NA, NG, NI, NO, NZ, OM, PA, PE, PG, PH, PL, PT, QA, RO, RS, RU, RW, SA, SC, SD, SE, SG, SK, SL, SM, ST, SV, SY, TH, TJ, TM, TN, TR, TT, TZ, UA, UG, US, UZ, VC, VN, ZA, ZM, ZW.

(84) Designated States *(unless otherwise indicated, for every kind of regional protection available)*: ARIPO (BW, GH, GM, KE, LR, LS, MW, MZ, NA, RW, SD, SL, ST, SZ, TZ, UG, ZM, ZW), Eurasian (AM, AZ, BY, KG, KZ, RU, TJ, TM), European (AL, AT, BE, BG, CH, CY, CZ, DE, DK, EE, ES, FI, FR, GB, GR, HR, HU, IE, IS, IT, LT, LU, LV, MC, MK, MT, NL, NO, PL, PT, RO, RS, SE, SI, SK, SM, TR), OAPI (BF, BJ, CF, CG, CI, CM, GA, GN, GQ, GW, KM, ML, MR, NE, SN, TD, TG).

Declarations under Rule 4.17:
— *as to the identity of the inventor (Rule 4.17(i))*
— *as to applicant's entitlement to apply for and be granted a patent (Rule 4.17(ii))*
— *as to the applicant's entitlement to claim the priority of the earlier application (Rule 4.17(iii))*
— *of inventorship (Rule 4.17(iv))*

Published:
— *without international search report and to be republished upon receipt of that report (Rule 48.2(g))*

(54) Title: IMPROVED TWO-PHASE THERMAL MANAGEMENT SYSTEM

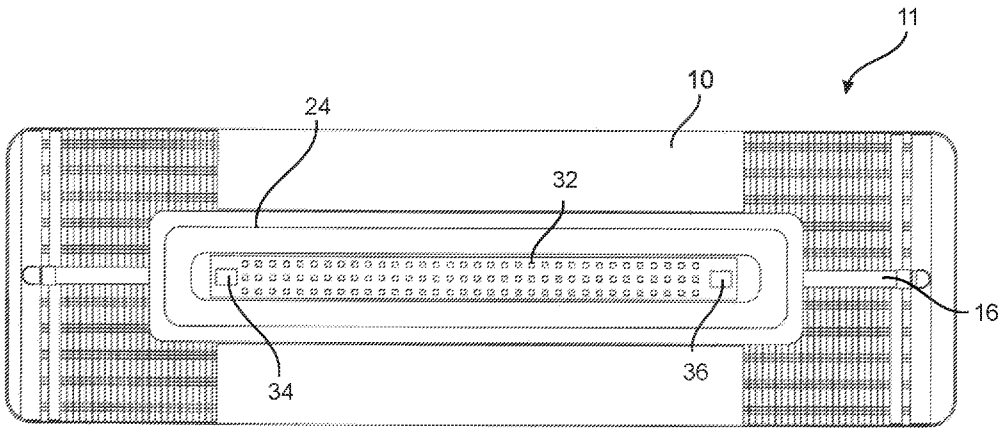

FIG. 3

(57) Abstract: An improved two-phase thermal management system is provided. The system is a passive two phase heat transfer system without the use of a mechanical pump or wick. The system may be incorporated with an LED lighting system. The system includes at least two transport paths, at least one evaporator and a condenser assembly in fluid communication. The condenser assembly has a plurality of heat transfer fins, at least one exchange tube, and at least two headers. The headers are positioned below the at least one exchange tube. A pair of thermal cut-off switches is also provided.

WO 2019/207497 A2

IMPROVED TWO-PHASE THERMAL MANAGEMENT SYSTEM

CROSS-REFERENCE TO RELATED APPLICATIONS

[0001] The present application claims priority to United States provisional application serial number 62/662,889 filed on April 26, 2018 entitled "Two- phase based thermal management system for electronics", the disclosure of which is hereby incorporated in its entirety at least by reference.

FIELD OF THE INVENTION

[0002] The present invention generally relates to cooling systems, more particularly related to an improved two-phase thermal management system for high temperature and high heat flux electronics devices.

DESCRIPTION OF RELATED ART

[0003] As well known in the art, the thermal management for lighting systems, such as LED lighting systems, is a major design issue. Passive two-phase cooling systems, such as closed looped thermosiphon heat exchange systems, are well established for electronic cooling applications. However, they have several disadvantages. For instance, to operate effectively, thermosiphons must be mounted and positioned such that the condensed liquid can return to the evaporator. Furthermore, improperly designed thermal management systems lead to inefficient operation, decreasing the life span of the system and the appliances.

[0004] A two phase thermosiphon requires gravity to operate, and unless it has pumped assistance (either via mechanical pump for fluid circulation or wick for capillary pumping) the output heat exchanger must be above the input.

[0005] Thermosiphons and other two phase thermal management systems are generally designed to operate within a set temperature range. A working fluid is chosen accordingly to the operating temperature range, assuring that efficient evaporation and condensation can occur within this range.

[0006] These technologies are of great interest because heat density in computer chips, photovoltaics, IGBTs and LEDs is rapidly increasing, posing heat removal problems. Two phase, or boiling, heat transfer is up several hundred times faster than heat transfer through copper, which is the best performing easily available material. However, in two phase transfer, it is critically important that liquid returns to the evaporator so that heat can be removed via the phase change (boiling) from liquid to vapor. If no liquid returns to the evaporator "dry out" occurs and heat transfer stops. This is a problem that limits the maximum performance and correct operation of all boiling heat transfer devices including heat pipes and two phase thermosiphons.

[0007] Thus, an efficient and effective thermal management that is not limited to the disadvantages of the prior art is needed to assure efficient operation and longevity. Consequently, an improved two-phase thermal management system is provided.

[0008] This background information is provided for the purpose of making known information believed by the applicant to be of possible relevance to the present invention. No admission is necessarily intended, nor should be construed, that any of the preceding information constitutes prior art against the present invention.

BRIEF SUMMARY OF THE INVENTION

[0009] In one aspect of the invention an improved two-phase thermal management system is provided, comprising an evaporator (such as, but not limited to a tube); a condenser assembly comprising a plurality of heat transfer fins, at least one exchange tube, and at least two headers, wherein the pair of headers are positioned below the at least one exchange tube; at least two transport tubes, which are in fluid communication with the evaporator and the condenser assembly, wherein the transport tubes are configured to transport vapor from the evaporator to the condenser assembly, and liquid from the condenser assembly to the evaporator; and, the two phase heat transfer system is a passive heat exchange system without the use of a mechanical pump or wick. The condenser may either be passively cooled (natural convection) or actively cooled (forced convection).

[0010] In another embodiment, the system is for a LED lighting system having electronics equipment including LED drivers and LED lights. An upper and lower heat transfer blocks are provided, wherein the evaporator tube is thermally coupled to the upper and lower heat transfer block. An enclosure having a pair of large air openings is provided, wherein the LED drivers are positioned between the pair of large air openings.

[0011] In another embodiment, the upper and lower heat transfer blocks are constructed of aluminum or copper and any other suitable material.

[0012] In another embodiment, the first and the second transport tubes are constructed of aluminum or copper or any other suitable material.

[0013] In another embodiment, the plurality of heat transfer fins is constructed of aluminum or copper or any other suitable material.

[0014] In yet another embodiment, a pair of thermal cutoff switches is provided, wherein each thermal cutoff switch is positioned on each end of the electronics equipment such that during operation a thermal cutoff switch, the pair of thermal cutoff switches will trip and turn off the system, if the system is tiled too far to a left direction or a right direction before "evaporator dry out" occurs and damages the electronics equipment, due to overheating.

[0015] In another aspect of the invention, a condenser assembly is provided, comprising a plurality of heat transfer fins, at least one exchange tube, and at least two headers, wherein the headers are positioned below the at least one exchange tube.

[0016] In another embodiment, the use of a fan with the condenser forms the forced convection cooling system. The similar can be implemented as per one of the embodiment of this invention.

[0017] In another embodiment, the condenser is incorporated with a two-phase thermal management system for cooling electronics. In another embodiment, the condenser is incorporated with a two-phase thermal management LED lighting system. In yet another embodiment, the condenser incorporated with a looped two phase passive heat exchange system without the use of a mechanical pump or wick. The condenser of which may be either cooled using natural convection (passive) or forced convection (active) cooling.

BRIEF DESCRIPTION OF THE DRAWINGS

[0018] The accompanying drawings are included to provide a further understanding of the present disclosure, and are incorporated in and constitute a part of this specification. The drawings illustrate exemplary embodiments of the present disclosure and, together with the

description, serve to explain the principles of the present disclosure. The diagrams are for illustration only, which thus is not a limitation of the present disclosure, and wherein:

[0019] FIG. **1** is a side view of an improved two-phase thermal management LED lighting system according to an embodiment of the present invention;

[0020] FIG. **2** is a side view of the improved two-phase thermal management LED lighting system with the enclosure removed according to an embodiment of the present invention;

[0021] FIG. **3** is a bottom view of the improved two-phase thermal management LED lighting system according to an embodiment of the present invention; and,

[0022] FIG. **4** is a perspective view of the improved two-phase thermal management LED lighting system according to an embodiment of the present invention.

DETAILED DESCRIPTION OF THE PREFERRED EMBODIMENT

[0023] As used in the description herein and throughout the claims that follow, the meaning of "a," "an," and "the" includes plural reference unless the context clearly dictates otherwise. Also, as used in the description herein, the meaning of "in" includes "in" and "on" unless the context clearly dictates otherwise.

[0024] The following description is provided to enable any person skilled in the art to make and use the invention and sets forth the best modes contemplated by the inventor of carrying out their invention. Various modifications, however, will remain readily apparent to those skilled in the art, since the general principles of the present invention have been defined herein to specifically provide an improved two-phase thermal management system.

[0025] Unless defined otherwise, all technical and scientific terms used herein have the same meaning as commonly understood by one of ordinary skill in the art to which this invention belongs.

[0026] If the specification states a component or feature "may", "can", "could", or "might" be included or have a characteristic, that particular component or feature is not required to be included or have the characteristic.

[0027] As used in the description herein and throughout the claims that follow, the meaning of "a," "an," and "the" includes plural reference unless the context clearly dictates otherwise. Also, as used in the description herein, the meaning of "in" includes "in" and "on" unless the context clearly dictates otherwise.

[0028] Exemplary embodiments will now be described more fully hereinafter with reference to the accompanying drawings, in which exemplary embodiments are shown. These exemplary embodiments are provided only for illustrative purposes and so that this disclosure will be thorough and complete and will fully convey the scope of the invention to those of ordinary skill in the art. The invention disclosed may, however, be embodied in many different forms and should not be construed as limited to the embodiments set forth herein. Various modifications will be readily apparent to persons skilled in the art.

[0029] Each of the appended claims defines a separate invention, which for infringement purposes is recognized as including equivalents to the various elements or limitations specified in the claims. Depending on the context, all references below to the "invention" may in some cases refer to certain specific embodiments only. In other cases it will be recognized that references to the "invention" will refer to subject matter recited in one or more, but not necessarily all, of the claims.

[0030] All methods described herein can be performed in any suitable order unless otherwise indicated herein or otherwise clearly contradicted by context. The use of any and all examples, or exemplary language (e.g., "such as") provided with respect to certain embodiments herein is intended merely to better illuminate the invention and does not pose a limitation on the scope of the invention otherwise claimed. No language in the specification should be construed as indicating any non-claimed element essential to the practice of the invention

[0031] It is a particular object of the present invention to provide a two-phase heat transfer thermal management system utilizing a design configured to reduce the dependence on positional orientation of conventional thermal systems during operation that is typically associated with two-phase systems of the prior art, such as thermosiphons systems as previously discussed. Advantageously, the present invention provides a condenser design positioning the headers at or below the lowest row of heat exchange tubes (top of the headers are positioned below the top of the heat exchange tube), such that efficient liquid evacuation can be assured with vastly increased orientational independence, i.e. the system can be tilted left, right, or be horizontal during operation (without liquid pooling inside the heat exchange tubes of the condenser). Further, advantageously, the present invention removes the need to install the condenser at an angle, which is typically done in order to remove liquid efficiently, reducing the size requirement of the system.

[0032] In a preferred embodiment, the system is a LED lighting system. However, it should be understood that the system may be adapted for other applications without departing from the spirt and scope of the invention. The components of the system will be disclosed in more detail below.

[0033] FIG. **1** is a side view of an improved two-phase thermal management LED lighting system **1** according to an embodiment of the present invention. Referring now to FIG. **1**, the two-phase thermal management LED lighting system comprises an enclosure **10**, a first transport tube **12**, a second transport tube **14**, an evaporator tube **16**, a first connection **18**, a second connection **20**, an upper heat transfer block **22**, and a lower heat transfer block **24**. The first and second transport tubes are for transferring vapor and liquid during operation and connect to the evaporator tube via the first and second connection respectively, wherein the first and second transport tubes are connected to a condenser assembly (**11**; FIG. **2**). In one embodiment, the first and second connections are 90 degree connections with respect to first transport tube 12, second transport tube 14 and evaporator tube 16.

[0034] In another embodiment, the various tubes such as transport tubes and evaporator tubes are constructed from aluminum; however other materials may be used, such as stainless steel, copper, brass, or other materials for their desired characteristics, cost, availability, etc. In another embodiment, the evaporator tube embraces a surface area enhancement in order to improve pool boiling performance during operation.

[0035] In another embodiment, the evaporator tube is thermally coupled to electronics equipment using the upper heat transfer block and lower heat transfer block. This will be described in greater detail below. In a preferred embodiment, the upper and lower blocks are constructed of aluminum. However, other materials can also be used.

[0036] In another embodiment, the evaporator tube is mechanically fastened, via screws, to the upper and lower blocks to assure good thermal transfer between the evaporator tube, the blocks, and ultimately the electronics equipment or appliance.

[0037] In another embodiment, the evaporator tube can be connected or linked to upper and lower blocks by any linking or fixing means.

[0038] In another embodiment, the enclosure is constructed from sheet metal. In one embodiment, the enclosure includes large air openings **26** and **28** configured to improve thermal performance of the overall system, including better natural convection through the condenser fins (**2**; FIG. **2**), as well as providing passive airflow over the LED drivers (**30**; FIG. **4**) which are positioned between the large air openings and the condenser assembly (11; Fig. 2).

[0039] During operation, heat generated from the electronics equipment or the LED appliance, transfer into the upper and lower heat transfer blocks, which are mechanically and thermally coupled to the evaporator tube as previously described. The heat generated from the LEDs raises the temperature inside the evaporator tube, the liquid inside the evaporator tubes turns to vapor, and the bubble buoyancy effect carries the vapors to the condenser assembly where it converts back into a liquid, wherein gravity feeds the liquid back to the evaporator tube, and the evaporation and condensation cycle repeats.

[0040] Condensers can be air-cooled (using either natural convection or forced convection), water-cooled, or evaporative. The condenser is a heat exchanger which allows heat to migrate from the refrigerant gas to either water or air. Air cooled condenser are manufactured from copper, aluminum, stainless steel and other suitable material tubes (for the refrigerant flow) and aluminum, cooper, stainless steel and other suitable material fins (for the air flow). Each condenser has a different material cost and they vary in terms of efficiency.

[0041] FIG. **2** is a side view of the improved two-phase thermal management LED lighting system with the enclosure removed according to an embodiment of the present invention. Referring now to FIG. **2**, the enclosure is removed for ease of viewing condenser

assembly **11**. In one embodiment, the condenser assembly comprises a plurality of heat transfer fins **2**, at least one exchange tube **4**, end plates **6** and**7**, and headers **8** and**9**. In another embodiment, the heat transfer fins are constructed of aluminum. In alternative embodiments, the heat transfer fins are constructed of copper, aluminum and/or any other material suitable.

[0042] As previously described, the looped two-phase thermosiphons only work if vapors can travel to the condenser assembly and liquid can return to the evaporator using gravitational forces. As such, these devices must be properly located and positioned in order to function properly. If the assembly is turned upside down there would be no liquid in the evaporator tube and any change of temperature would not be able to initiate boiling required for heat transfer. As another example, typically condensers are installed at an angle to assure that condensed liquid can return. However, installing the condenser at an angle increases the overall size requirement (mainly in height). Also, once that angle is exceeded, condensed liquid can no longer be removed efficiently. Heat exchange tubes will start to accumulate fluid and condensed liquid may no longer be moved back to the evaporator. Performance will either degrade or the system will stop working entirely.

[0043] The present invention greatly enhances the operating flexibility by allowing for perfectly horizontal operation, or the operation where the unit is tilted to the left, and the operation where the unit is tilted to the right. Furthermore, the requirement to install the condenser at an angle has been avoided.

[0044] The improvements discussed above are obtained by locating the top of both headers **8** and **9** below the top of the lowest heat exchange tube **4A** of the at least one heat exchange tube. More specifically, it is critical that the top of both headers **8** and **9** are located below the top of the lowest heat exchange tube in the condenser assembly 11.

[0045] FIG. **3** is a bottom view of the improved two-phase thermal management LED lighting system according to an embodiment of the present invention. Referring now to FIG. **3**, the system comprising enclosure **10**, condenser assembly **11**, evaporator tube **16**, and lower heat transfer block **24**, wherein the lower heat transfer block is thermally coupled to the evaporator tube and the electronics equipment i.e. LED lighting system, a plurality of light emitting diodes **32**, and thermal cutoff switches **34** and **36**.

[0046] As previously mentioned, two-phase thermosiphons type thermal management systems are limited when operating and have to be placed properly in the field of gravity in order to assure that condensed vapor can return as liquid to the evaporator. It should be understood, that while this invention increases the operating flexibility, there are still some situations, under which the present invention would fail to provide sufficient cooling to the electronics equipment.

[0047] In another embodiment, the thermal cutoff switches are provided at both ends of the electronic equipment as a fail-safe. This way, in situations where the LED lighting system is tilted too far to the left or right, either thermal cutoff switch **34** or **36** will trip before any damage occurs to the to the electronic equipment. Thus, it is critical, that the thermal cutoff switches are located on the two far ends of the provided electronic equipment. FIG. **4** is a perspective view of the improved two-phase thermal management LED lighting system according to an embodiment of the present invention. Referring now to FIG. **4**, two pairs of holes **38** and **40** are provided on opposite ends of the enclosure, wherein the holes are configured to facilitate hanging the LED lighting system as well known in the art. It should be understood, that other hanging and/or installation arrangements may be provided. During operation, natural convection sucks fresh air into the condenser. The vast majority of this air will be provided through the large air openings **26** and **28** in the enclosure. As previously mentioned this creates a passive airflow over the LED

drivers **30** and provides efficient and effective cooling to the LED drivers. This is critical, as life expectancy is directly related to operating temperature and conditions of the LED drivers. In this view, it is clearly shown that LED drivers **30** are strategically placed between the large openings in the enclosure for maximum efficiency and longevity.

[0048] Although the invention has been described in considerable detail and in a language specific to structural features and or method acts, it is to be understood that the invention defined in the appended claims is not necessarily limited to the specific features or specific electronic equipment described. Rather, the specific features and electronic equipment are disclosed as exemplary preferred forms of implementing the claimed invention. Stated otherwise, it is to be understood that the phraseology and terminology employed herein, as well as the abstract, are for the purpose of description and should not be regarded as limiting. Therefore, while exemplary illustrative embodiments of the invention have been described, numerous variations and alternative embodiments will occur to those skilled in the art. Such variations and alternate embodiments are contemplated, and can be made without departing from the spirit and scope of the invention.

[0049] It should further be noted that throughout the entire disclosure, the labels such as left, right, front, back, top, bottom, forward, reverse, clockwise, counter clockwise, up, down, or other similar terms such as upper, lower, aft, fore, vertical, horizontal, oblique, proximal, distal, parallel, perpendicular, transverse, longitudinal, etc. have been used for convenience purposes only and are not intended to imply any particular fixed direction or orientation. Instead, they are used to reflect relative locations and/or directions/orientations between various portions of an object.

[0050] In addition, reference to "first," "second," "third," and etc. members throughout the disclosure (and in particular, claims) are not used to show a serial or numerical limitation but instead are used to distinguish or identify the various members of the group.

[0051] Groupings of alternative elements or embodiments of the invention disclosed herein are not to be construed as limitations. Each group member can be referred to and claimed individually or in any combination with other members of the group or other elements found herein. One or more members of a group can be included in, or deleted from, a group for reasons of convenience and/or patentability. When any such inclusion or deletion occurs, the specification is herein deemed to contain the group as modified thus fulfilling the written description of all groups used in the appended claims.

CLAIMS

What is claimed is:

1. An improved two-phase thermal management system comprising:

at least one evaporator;

at least one condenser assembly comprising a plurality of heat transfer fins, at least one exchange tube, and at least two headers, wherein the headers are positioned below the at least one exchange tube;

at least two transport paths in fluid communication with the evaporator and the condenser assembly;

wherein the two phase system is a passive heat exchange system without the use of a mechanical pump, or wick.

2. The transport paths of claim 1, wherein the transport paths can be in form of tubes or any other mean to carry vapor or liquid.

3. The evaporator of claim 1, wherein the evaporator is in form of a tube or pipe.

4. The improved two-phase thermal management system of claim 1, wherein the system is for a LED lighting system having electronics equipment including LED drivers and LED lights.

5. The improved two-phase thermal management system of claim 1, further comprising an upper and a lower heat transfer block, wherein the evaporator is thermally coupled to the upper and lower heat transfer blocks.

6. The improved two-phase thermal management system of claim 1, further comprising an enclosure having a pair of large air openings, wherein the LED drivers are positioned between the pair of large air openings.

7. The improved two-phase thermal management system of claim 1, wherein the upper and lower heat transfer block are constructed of aluminum and/or copper.

8. The improved two-phase thermal management system of claim 1, wherein the plurality of heat transfer fins is constructed of aluminum or copper.

9. The improved two-phase thermal management system of claim 1, further comprising a pair of thermal cutoff switches, wherein each thermal cutoff switch is positioned on each end of the electronics equipment such that during operation a thermal cutoff switch of the pair of thermal cutoff switches will trip and turn off the system if the system is tiled too far to a left direction or right direction before damage occurs to the electronics equipment.

10. The improved two-phase thermal management system of claim 4, wherein the enclosure is constructed of sheet metal.

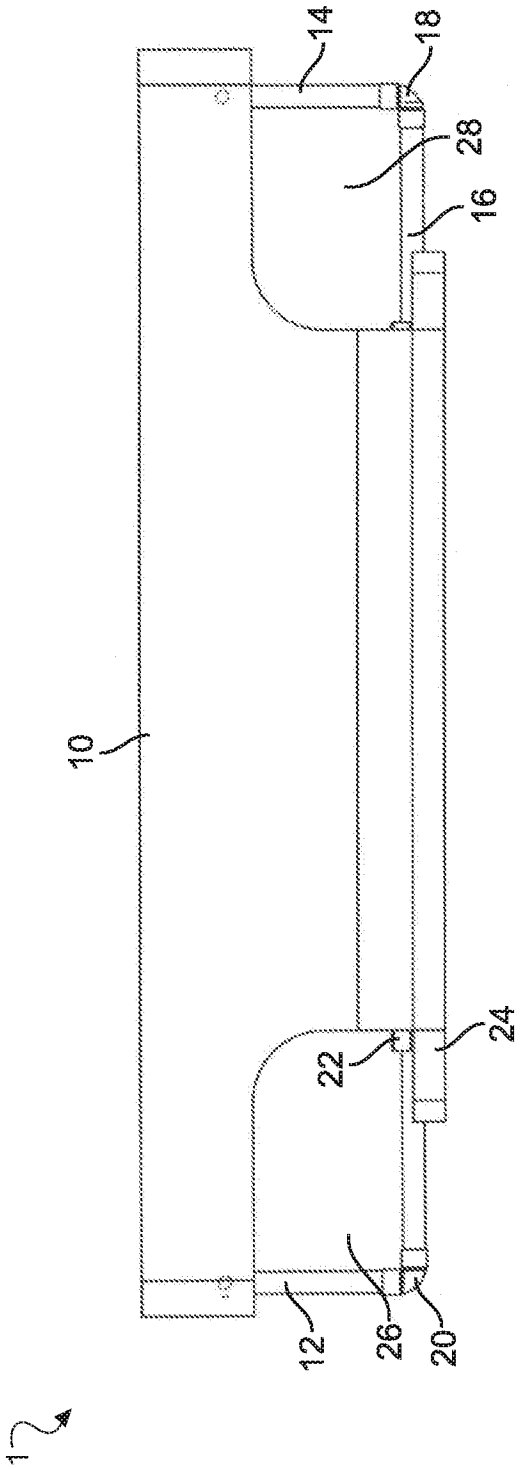

FIG. 1

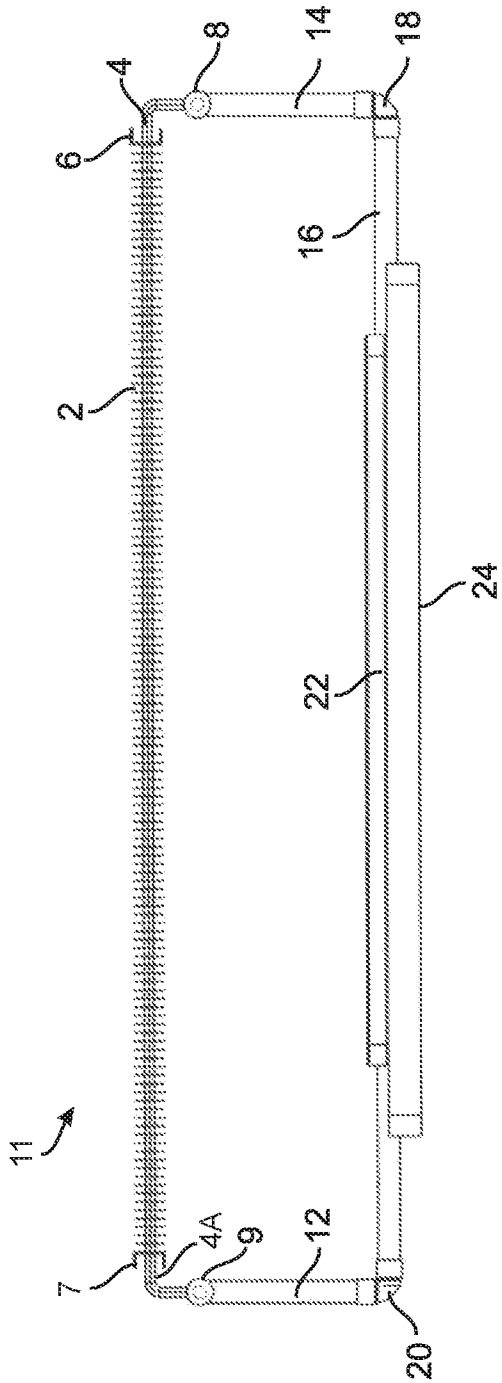

FIG. 2

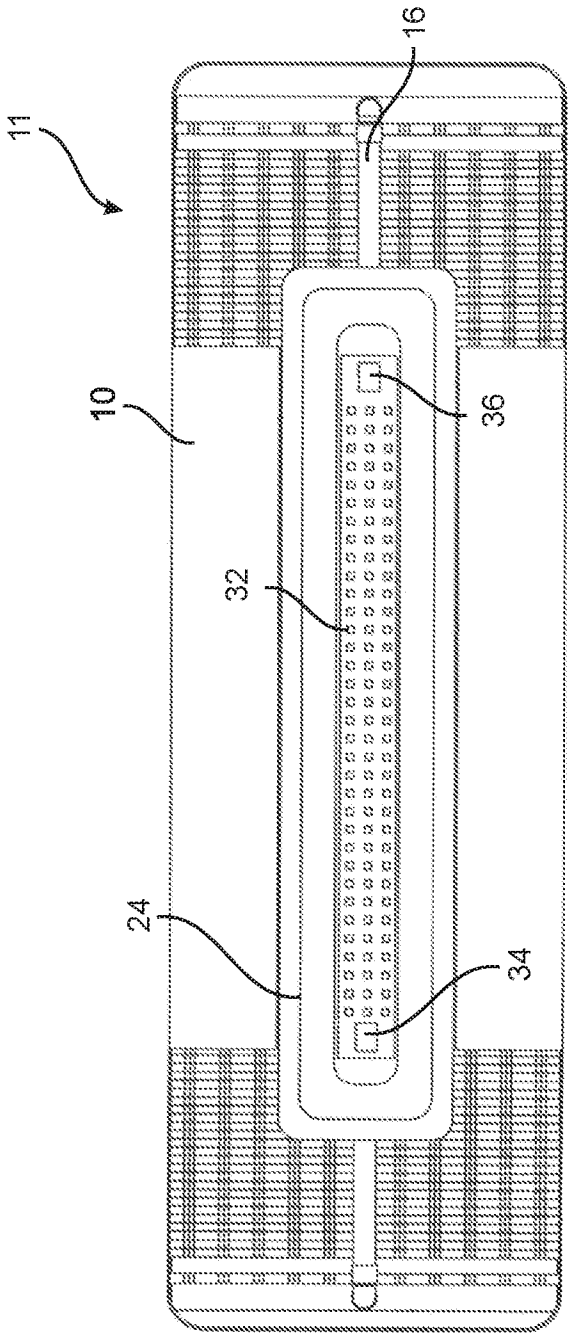

FIG. 3

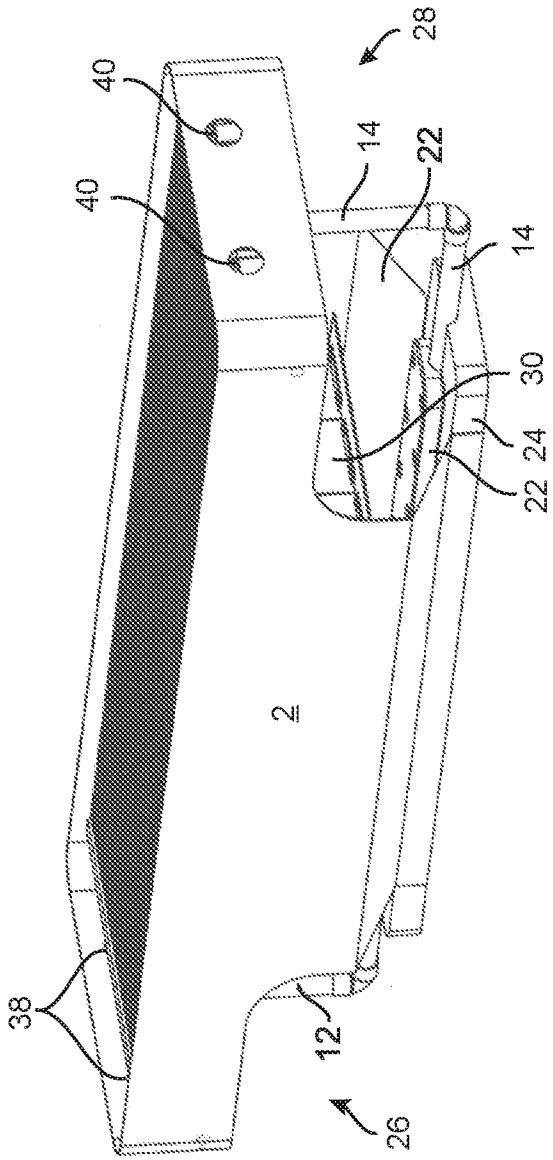

FIG. 4