March 8, 1938. M. T. ARCHER 2,110,825

PACKED TOOL JOINT

Filed March 12, 1935 2 Sheets-Sheet 1

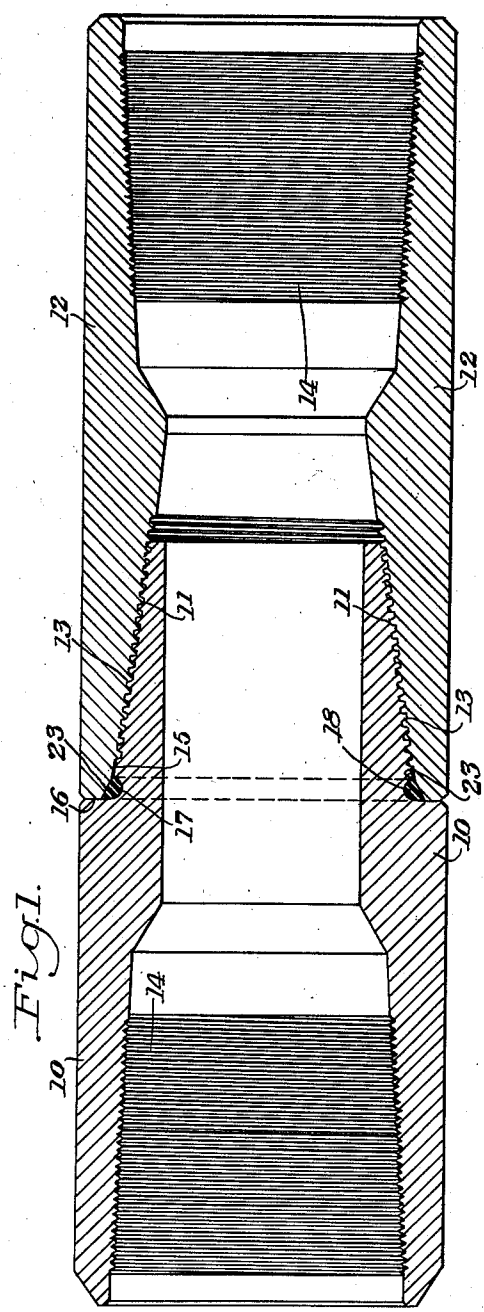

Fig. 1.

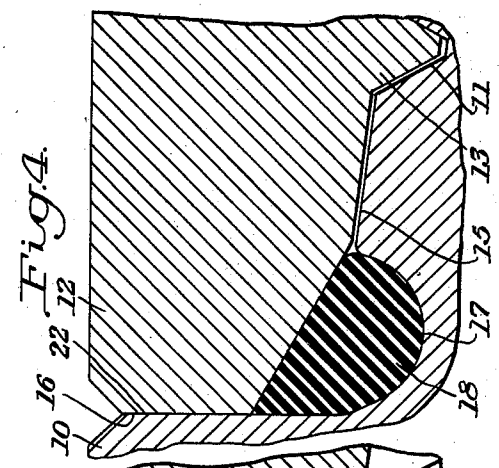

Fig. 4.

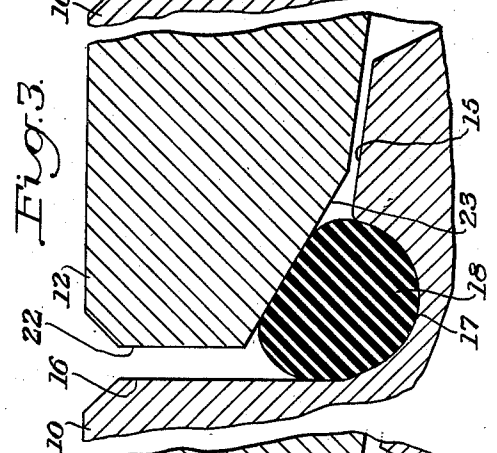

Fig. 3.

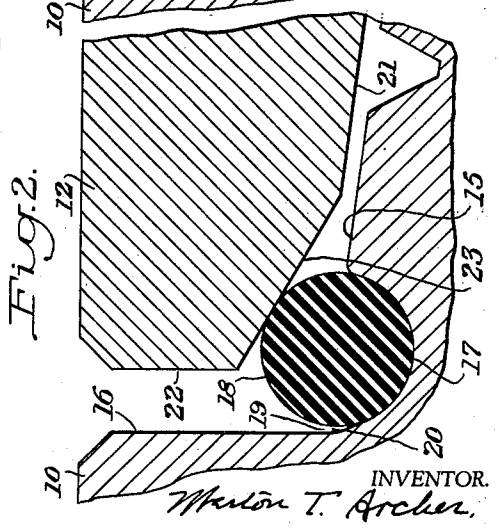

Fig. 2.

INVENTOR.
Marion T. Archer.
BY Edward A. Lawrence.
his ATTORNEY.

March 8, 1938. M. T. ARCHER 2,110,825

PACKED TOOL JOINT

Filed March 12, 1935 2 Sheets-Sheet 2

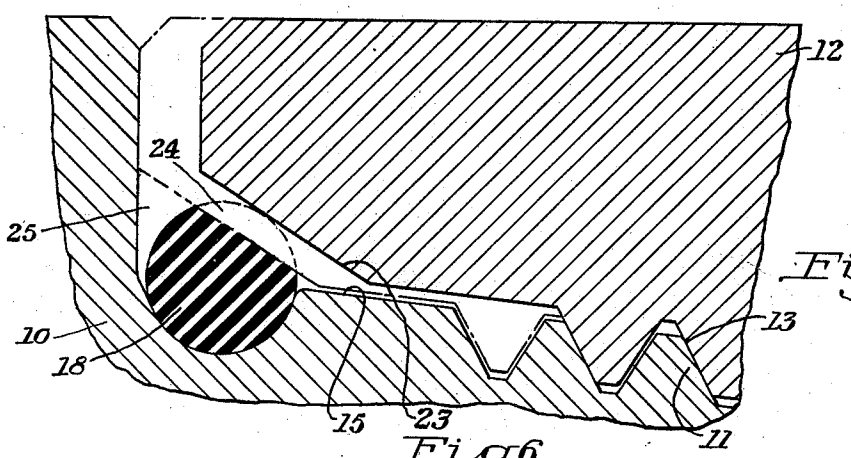

Fig. 5.

Fig. 6.

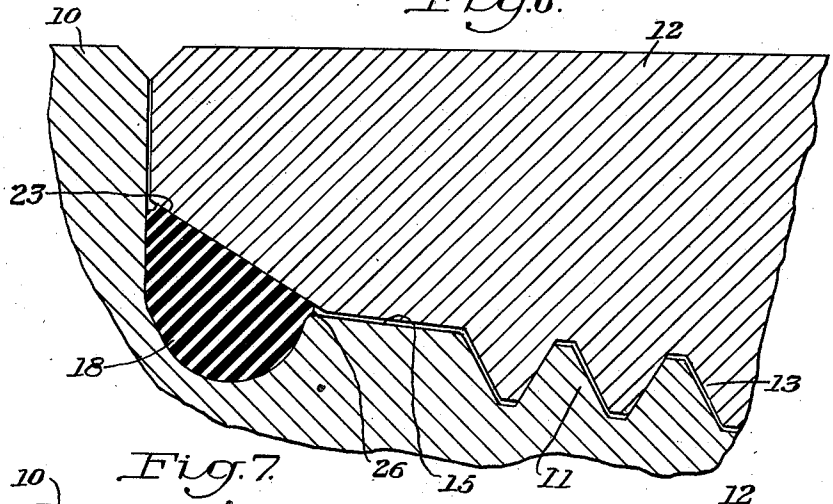

Fig. 7.

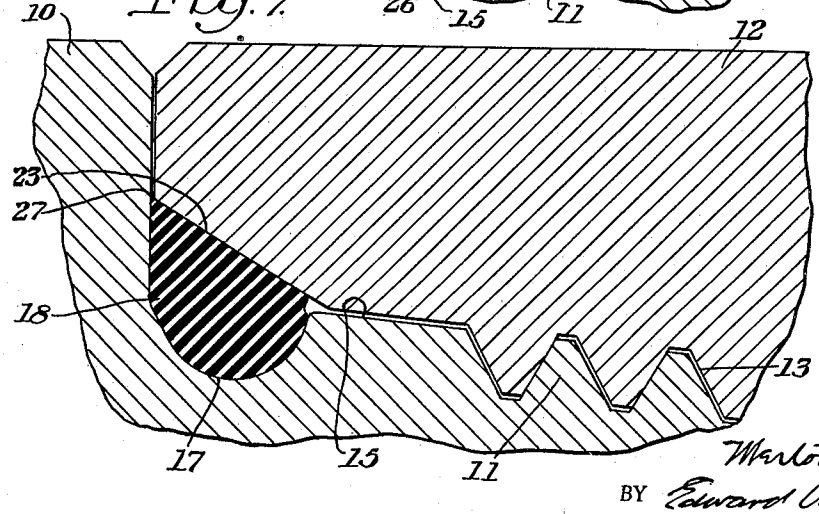

INVENTOR.
Marlon T. Archer.
BY Edward A. Laurence.
his ATTORNEY.

Patented Mar. 8, 1938

2,110,825

UNITED STATES PATENT OFFICE

2,110,825

PACKED TOOL JOINT

Merton T. Archer, Toledo, Ohio, assignor to The National Supply Company, Pittsburgh, Pa., a corporation of Pennsylvania

Application March 12, 1935, Serial No. 10,692

6 Claims. (Cl. 285—146)

This invention relates generally to pipe joints and more particularly to packed pipe joints wherein a packing is employed to provide a seal between the members making up the joint to prevent leakage of fluids therethrough in either direction.

This invention may be conveniently applied in joints for connecting consecutive lengths of drill pipe to form what is generally termed a drill string, the length of which frequently exceeds four thousand feet. The lower end of the drill string is provided with a drill bit for drilling oil wells and the like and the drill string in reality constitutes the shank.

A pair of coupling elements are generally employed in connecting consecutive lengths of drill pipe to form a drill string. These elements, commonly termed tool joints, comprise complementary pin and box members having threaded portions arranged to be interengaged to form the joint. The other ends of these members are provided with threads for coupling them to their respective sections of drill pipe. I have chosen this form of connection to illustrate my invention.

In rotary drilling operations the cutting bit on the lower end of the drill string is suspended in a well and rotary motion is imparted to the drill string from suitable apparatus at the well head. This motion is transmitted through the string to the bit for drilling the well. The drill pipe provides a continuous passage through which mud laden fluid is delivered to the bit. The continuous flow of this fluid keeps the bit clean, softens the formation and flushes the drilling from the well hole.

The mud laden fluid being delivered through the pipe under high pressure is inclined to leak through the joint connections and in such cases where leaks occur, sand, carried in suspension in the fluid, produces a destructive abrasive action, thereby destroying the tool joints and reducing fluid pressure at the bit.

There are also conditions occurring in well drilling operations wherein it is desired to supply a back pressure valve at the lower end of the drill string during the operation of lowering the string into a well filled with fluid, to gain advantage of the buoyancy resulting from the displacement of the fluid by the hollow drill string.

This operation sets up an external pressure head wherein the fluid surrounding the drill string seeks to leak through the tool joint connections to the interior of the string.

The first object of this invention is to provide, in combination with the conventional type of joint construction, a seal to resist the fluid pressure in its tendency to leak through the joint connections in either direction.

I attain this object by the provision of an annular packing ring inwardly adjacent the threads of the male member which is arranged to be engaged by an outer portion of the female member.

The packing lies in an annular groove in the male member spaced from a transverse annular abutting shoulder. The end of the bore of the female member is provided with a bevelled surface which engages the packing ring. The packing ring is preferably made of circular cross section. Thus the advancement of the female member into threaded engagement with the male member brings the beveled surface into contact with the packing on the male member. Further advancement causes the packing of circular cross section to be urged into the space between the groove and the transverse shoulder deforming the shape of the packing without subjecting it to appreciable pressure.

The end of the female member engages the transverse shoulder in its screwed home position and the packing lies between them in a deformed shape but in a space slightly larger in volume than it would ordinarily fill if it were a free body. The packing being deformed and confined between the members has all the characteristics of a free body and will be referred to as such.

Under these conditions the packing assumes substantially the cross sectional shape of the totally enclosed annular groove in which the packing is constrained when mating joint members are completely engaged. Thus the girth diameter of the packing when confined between the members is greater adjacent the transverse shoulder of the male member.

The packing occupying an equal or slightly greater space when confined between the members is not subjected to high mechanical stresses transmitted through the assembled joint during the use of the members as a part of a drill string or the like.

Any external or internal fluid pressure seeking its way through the joint contacts the free packing body subjecting it to pressure. This tendency initiates a flowing action on the packing in the same direction as that of the pressure. The packing being forcefully constrained tightly seals the walls of the closure and the adjacent surfaces of the male and female members, thus preventing the escape of fluid therebetween. The greater the fluid pressure the tighter the seal is the obvious result under these conditions.

Other advantages and objects will appear in the following description.

Referring to the accompanying drawings wherein I have illustrated a practical embodiment of the principles of my invention,

Fig. 1 is a longitudinal section of a pair of tool joint members in their assembled position showing the application of this invention.

Fig. 2 is an enlarged fragmentary section showing the relative positions of the members when the female member engages the packing as they are being coupled to form a joint.

Fig. 3 is a view similar to Fig. 2 with the members being farther advanced to the coupled position, illustrating the flowing action on the packing as it is being deformed.

Fig. 4 is a view similar to Fig. 2 with the members in their fully made up position.

Fig. 5 is an enlarged fragmentary view illustrating diagrammatically the relative cross sectional areas of the space that the packing occupies when normal and when deformed.

Fig. 6 is an enlarged view similar to Fig. 4 illustrating the tendency of the packing to flow when subjected to an external fluid pressure.

Fig. 7 is a view similar to Fig. 6 illustrating the tendency of the packing to flow when it is subjected to an internal fluid pressure.

Referring to Fig. 1 of the drawings wherein a conventional type of tool joint is shown, **10** represents the male or pin member of hollow cylindrical form and provided with a reduced coaxial portion having the threads **11** formed thereon, which portion may be tapered as shown. **12** represents a complementary female or box member having the mating threads **13** formed within its bore, which bore is coaxial with and complementary to the threaded portion of the pin member. The bores of the other ends of these members are provided with threads, as shown at **14**, which are arranged to receive complementary threaded portions of pipe sections which are not shown.

15 represents an annular surface on the pin member between the threads **11** and an annular groove **17** at the base of the transverse annular shoulder **16**. The surface **15** may be a continuation of the plane of the top of the threads **11**. The groove **17** is preferably of substantially semi-circular cross-section as shown but may be of other form. **18** represents an annular packing ring of substantially circular cross section arranged to be placed in the groove **17**. This packing is preferably made of resilient material such as rubber. The main requirement as to its characteristics is that it be flexible or pliable so that it will yield to fluid pressures and flow into available spaces creating a fluid seal therein.

The cross section of groove **17** is not completely semi-circular as may be noted by the space **19** between the circular shaped packing and the transverse shoulder **16**. The inner end of the groove **17** is formed by the conical surface **20** which terminates at the shoulder **16**, thus providing a smooth continuous path on which the packing may be deformed into its proper shape to function as a seal when the joint is being formed.

This deforming action is illustrated in Fig. 3 wherein the packing has assumed a cross sectional shape resembling that of an ovoid. When the members are farther advanced to their fully made up position, as indicated in Fig. 4, the packing is deformed into cross sectional shape substantially equivalent to that of a sector.

The outer bore of the female or box member is provided with the annular surface **21**. This surface is complementary to the surface **15** and may be the continuation of the plane of the roots of the threads **13**. The surfaces **15** and **21** may be tapered as shown, or may be cylindrical.

The end **22** of the member **12** is arranged to engage the shoulder **16** when the joint is properly made up. The unthreaded surface **21** and the surface of the end **22** are connected by an annular beveled surface **23** having a greater degree of taper than that of the surfaces **15** and **21**. This beveled surface may be termed the working surface of the packing as it works or rolls the packing into the desired shape and forms a part of the packing chamber wall.

The degree of taper of the surface **23** effects the volume of the packing used. The volume of the enclosed packing chamber between the assembled members **10** and **12** must be equal or slightly greater than the volume of the packing used to avoid initial compression of the packing. Thus the angle of taper may be changed to vary the volume of the enclosed packing chamber.

The respective volumes of the packing and the chamber may be readily compared in Fig. 5. The segment **24** or the displaced portion of the packing is slightly smaller in area than the area **25** which represents space between the surfaces **16**, **20**, and **23** and the normal perimeter of the packing.

Even though the packing has been worked into a different shape it occupies an equal or greater volume and being resilient it is free to flow and seal the spaces between the members, thereby preventing leakage. This is demonstrated in Figs. 6 and 7. In Fig. 6 the highest fluid pressure is on the outside of the drill pipe. This external pressure seeks its way between the shoulder **16** and the end **22** and contacts the free packing body **18**, tending to force it ahead. The packing thus being under compression tends to be extruded between the members **10** and **12** on the low pressure side of the packing chamber forming the annular rib **26**.

In Fig. 7 the highest fluid pressure is on the inside of the drill pipe. This internal pressure seeks its way through the threaded portions of the members and contacts the free packing body **18** tending to force it between the shoulders **16** and **22**, thereby forming the annular rib **27** which seals the joint.

In both instances the compression of the packing by the fluid pressure forces it into sealing engagement with the walls of the packing chamber, providing an initial or primary seal as compared to the seal produced by the extruded part of the packing which may be termed the secondary seal. These terms refer to time and space rather than efficiency.

With this invention an efficient seal is obtained. The packing when not under fluid pressure though deformed is practically a free body and will not lose its resiliency and consequently its efficiency because it is free of mechanical pressure from the members which enclose it. Again, mechanical stresses transmitted from one member to the other which form the joint have no effect on the packing. This relieves the packing from undue wear and mechanical working by the members, which ages the material and causes it to lose its resiliency.

I claim:—

1. In a seal for a joint between two coaxially alined members, the combination of an annular

chamber having diverging walls formed by said members when the joint is made up, and a packing member in said chamber having a volume less than the capacity of said chamber and free to flow in response to fluid pressure whereby to wedge the packing against said diverging walls and thus seal the complementary surfaces of said joint.

2. In a seal for use in a joint connecting two coaxially alined members, the combination of an annular groove formed in one of said members and arranged to be closed by the other member when the joint is made up to form a chamber, and a resilient packing element in said groove having normally a different cross sectional contour than that of said groove and said packing element being shaped, but without material compression, to conform to said groove by the second member when the joint is made up, said packing element having the characteristics of a free body to flow in response to fluid pressure whereby to wedge the packing against the converging walls of said chamber and thus seal the complementary surfaces of said joint.

3. In a seal for a joint between two coaxially aligned members, the combination of an annular chamber having diverging walls formed by said members when the joint is made up, and a packing member normally of circular cross section in the chamber, the volume of which is less than the volume of said chamber, the packing being free to flow in response to fluid pressure whereby to wedge the packing against said diverging walls to seal the same.

4. In a seal for use in a joint connecting two coaxially aligned members, the combination of an annular chamber having diverging surfaces formed by said members when the joint is made up, and a packing in said chamber of less volume than the capacity of the chamber, the normal cross sectional shape of said packing being different from that of the chamber, causing the packing to be reshaped without material compression when the joint is made up, said packing capable of being wedged by fluid pressure between said diverging surfaces to seal the joint.

5. A rotary tool joint including a socket, a pin having a threaded shank adapted to be screwed into said socket, and sealing means between the pin and socket comprising a ring of resilient material disposed in an annular groove formed in the threaded shank of the pin and partially projecting from said groove to be pressed into tight engagement with the wall of the socket as the pin is screwed therein, said ring being made of rubber and being normally of a circular cross section, but in sealing position being distorted to a non-circular cross section.

6. A rotary tool joint including a socket, a pin having a threaded shank adapted to be screwed into said socket, and sealing means between the pin and socket comprising a ring of resilient material disposed in an annular groove formed in the threaded shank of the pin and partially projecting from said groove to be pressed into tight engagement with the wall of the socket as the pin is screwed therein, said pin having a shoulder at the outer end of the threaded shank, and said socket having a shoulder at the outer end of its bore adapted to be engaged by the shoulder of said pin when the pin is fully inserted in said socket, said groove being located adjacent the junction of said threaded shank and shoulder of said pin in the side wall of the pin.

MERTON T. ARCHER.