(12) INTERNATIONAL APPLICATION PUBLISHED UNDER THE PATENT COOPERATION TREATY (PCT)

(19) World Intellectual Property Organization
International Bureau

(43) International Publication Date
16 November 2017 (16.11.2017)

WIPO | PCT

(10) International Publication Number
WO 2017/193216 A1

(51) International Patent Classification:
H01L 23/473 (2006.01) *H05K 7/20* (2006.01)

(21) International Application Number:
PCT/CA2017/050568

(22) International Filing Date:
11 May 2017 (11.05.2017)

(25) Filing Language: English

(26) Publication Language: English

(30) Priority Data:
62/334,480 11 May 2016 (11.05.2016) US

(71) Applicant: **HYPERTECHNOLOGIE CIARA INC** [CA/CA]; 9300 Trans Canada Highway, Saint-Laurent, Québec H4S 1K5 (CA).

(72) Inventors: **HINTON, Michael**; 3524 rue Hutchison, Apt. 45, Montreal, Québec H2X 2H2 (CA). **MYDLARSKI, Laurent**; 14 rue Bayside, Dollard-des-Ormeaux, Québec H9A 2C7 (CA).

(74) Agent: **BENOÎT & CÔTÉ**; 560 Cremazie Boulevard East, Montréal, Québec H2P 1E8 (CA).

(81) Designated States *(unless otherwise indicated, for every kind of national protection available)*: AE, AG, AL, AM, AO, AT, AU, AZ, BA, BB, BG, BH, BN, BR, BW, BY, BZ, CA, CH, CL, CN, CO, CR, CU, CZ, DE, DJ, DK, DM, DO, DZ, EC, EE, EG, ES, FI, GB, GD, GE, GH, GM, GT, HN, HR, HU, ID, IL, IN, IR, IS, JP, KE, KG, KH, KN, KP, KR, KW, KZ, LA, LC, LK, LR, LS, LU, LY, MA, MD, ME, MG, MK, MN, MW, MX, MY, MZ, NA, NG, NI, NO, NZ, OM, PA, PE, PG, PH, PL, PT, QA, RO, RS, RU, RW, SA, SC, SD, SE, SG, SK, SL, SM, ST, SV, SY, TH, TJ, TM, TN, TR, TT, TZ, UA, UG, US, UZ, VC, VN, ZA, ZM, ZW.

(84) Designated States *(unless otherwise indicated, for every kind of regional protection available)*: ARIPO (BW, GH, GM, KE, LR, LS, MW, MZ, NA, RW, SD, SL, ST, SZ, TZ, UG, ZM, ZW), Eurasian (AM, AZ, BY, KG, KZ, RU, TJ, TM), European (AL, AT, BE, BG, CH, CY, CZ, DE, DK, EE, ES, FI, FR, GB, GR, HR, HU, IE, IS, IT, LT, LU, LV, MC, MK, MT, NL, NO, PL, PT, RO, RS, SE, SI, SK, SM,

(54) Title: CPU COOLING SYSTEM WITH DIRECT SPRAY COOLING

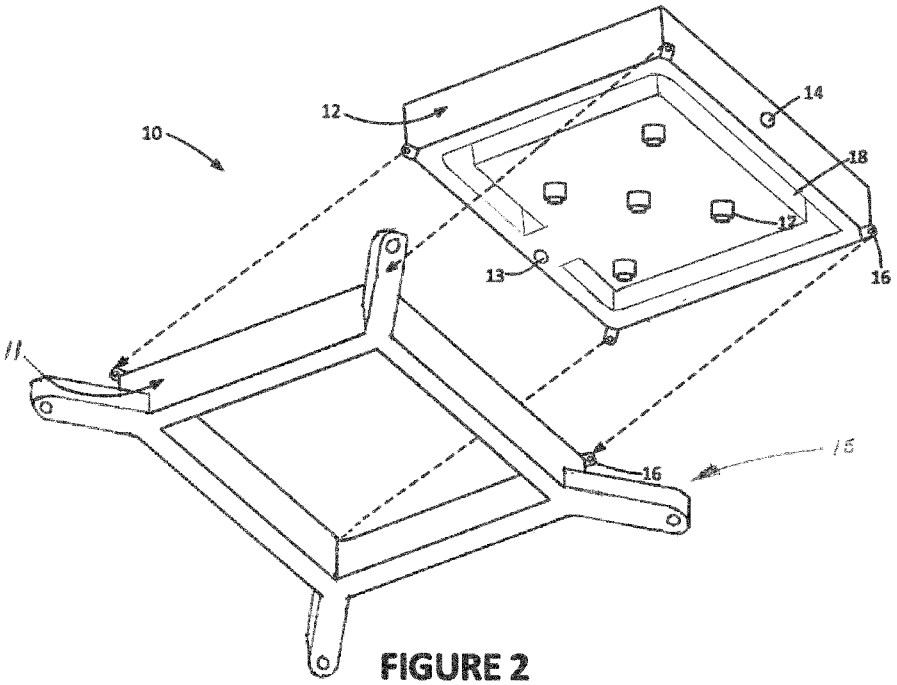

FIGURE 2

(57) Abstract: There is described a spray chamber for cooling a computer processor on a circuit board. The spray chamber comprises: a wall assembly for sealable mounting on an exposed cooling surface of the computer processor defining an enclosure having a top opening and a bottom opening which opens on the top surface of the computer processor; and a lid for covering the top opening of the wall assembly in a sealable manner, the lid having a nozzle which sprays coolant that impinges on the exposed cooling surface of the computer processor.

WO 2017/193216 A1

[Continued on next page]

TR), OAPI (BF, BJ, CF, CG, CI, CM, GA, GN, GQ, GW, KM, ML, MR, NE, SN, TD, TG).

Published:

— *with international search report (Art. 21(3))*

CPU COOLING SYSTEM WITH DIRECT SPRAY COOLING

BACKGROUND

(a) Field

[0001] The subject matter disclosed generally relates to cooling systems for electronics. More specifically, it relates to spray cooling devices for processors.

(b) Related Prior Art

[0002] There are various types of cooling devices for computer components. Existing devices usually rely on the presence of a cold plate to extract heat from the central processing unit (CPU) by conduction. A layer of thermal interface material is provided to ensure proper heat conduction from the CPU to the cold plate. The cold plate can then transfer its heat to another medium, which can be a fluid that flows on the cold plate.

[0003] This process can be inefficient given the number of intermediaries that are required to transport heat from the CPU to the outside.

[0004] Document US 6,646,879 describes a device to directly spray a coolant on various electronic components of a circuit board (aka a motherboard) inside a spraying chamber. As will be described below, it has been found that existing devices that spray a coolant on electronic components suffer from various drawbacks.

SUMMARY

[0005] According to an embodiment, there is provided a spray chamber for cooling a computer processor on a circuit board, the spray chamber comprising:

- a wall assembly for sealable mounting on an exposed cooling surface of the computer processor defining an enclosure having a top opening and a bottom opening which opens on the exposed cooling surface of the computer processor; and

- a lid for covering the top opening of the wall assembly in a sealable manner, the lid having a nozzle which sprays coolant that impinges on the exposed cooling surface of the computer processor.

[0006] According to an aspect, the spray chamber further comprises a board fastening system adapted to fasten to the circuit board and to form a hermetic seal between the spray chamber and the exposed cooling surface of the computer processor.

[0007] According to an aspect, the board fastening system comprises mounting arms that are compatible with a standard heatsink mounting mechanism of the circuit board.

[0008] According to an aspect, the heatsink mounting mechanism comprises a standardized screw hole pattern which is a part of the Independent Loading Mechanism (ILM) thereby the mounting arms are compatible with the ILM.

[0009] According to an aspect, the circuit board comprises a computer processor socket that comprises the ILM.

[0010] According to an aspect, the spray chamber further comprises a lid fastening system adapted to fasten and to form a hermetic seal between the wall assembly and the lid.

[0011] According to an aspect, the nozzle comprises more than one nozzle arranged according to an array pattern.

[0012] According to an aspect, the spray chamber further comprises further comprising an inlet adapted to receive the coolant and a chamber outlet adapted to allow outflow of coolant from the spray chamber.

[0013] According to an aspect, the inlet and the outlet are located in the lid.

[0014] According to an aspect, the outlet is located in the wall assembly.

[0015] According to an aspect, the lid and the wall assembly are made from a single block that forms the spray chamber.

[0016] According to an embodiment, there is provided a cooling system for cooling a computer processor on a circuit board, the cooling system comprising:

- a pump for pumping a coolant;

- a heat rejection unit where the coolant can release heat;

- a spray chamber defining an enclosure for enclosing an exposed cooling surface of the computer processor; and

- coolant-circulation assembly for transporting the coolant through the pump, the spray chamber and the heat rejection unit; and

[0017] According to an aspect, the spray chamber is adapted for spraying coolant on the exposed cooling surface of the computer processor.

[0018] According to an aspect, the coolant-circulation assembly, the pump, the spray chamber and the heat rejection unit form a closed-loop for transporting the coolant.

[0019] According to an aspect, the cooling system further comprises a reservoir for holding coolant, the reservoir being integrated in the closed-loop.

[0020] According to an aspect, the spray chamber comprises:

- a wall assembly for sealable mounting on an exposed cooling surface of the computer processor defining an enclosure having a top opening and a bottom opening which opens on the exposed cooling surface of the computer processor; and

- a lid for covering the top opening of the wall assembly in a sealable manner, the lid having a nozzle which sprays the coolant that impinges on the exposed cooling surface of the computer processor.

[0021] According to an aspect, the lid further comprises a lid reservoir where coolant is accumulated and pressurized by the pump.

[0022] According to an aspect, the cooling system further comprises a board fastening system adapted to fasten to the circuit board and to form a hermetic seal between the spray chamber and the exposed cooling surface of the computer processor.

[0023] According to an aspect of the invention, there is provided a spray chamber for cooling a CPU. The spray chamber comprises: a wall assembly for sealable mounting on an exposed cooling surface of the CPU defining an enclosure having a top opening and a bottom opening which opens on the exposed cooling surface of the CPU; and a lid for covering the top opening of the wall assembly in a sealable manner, the lid having at least one nozzle which sprays coolant that impinges on the exposed cooling surface of the CPU.

[0024] The exposed cooling surface of the CPU refers to the surface on the CPU where the cold plate or heat sink would normally be applied. Usually, this surface is the IHS (integrated heat spreader) of the CPU.

[0025] According to another aspect of the invention, there is provided a cooling system for cooling a CPU in a standard CPU socket, the cooling system comprising: a pump for pumping a coolant; a heat rejection unit where the coolant can release heat; a spray chamber comprising walls and a lid defining an enclosure with a bottom opening for enclosing an exposed cooling surface of the CPU; tubing for transporting the coolant from the pump to the spray chamber, to the heat rejection unit and back to the pump.

BRIEF DESCRIPTION OF THE DRAWINGS

[0026] Further features and advantages of the present disclosure will become apparent from the following detailed description, taken in combination with the appended drawings, in which:

[0027] Fig. 1 is a side view of the spray cooling system comprising a spray chamber, according to an embodiment; and

[0028] Fig. 2 is an exploded perspective view of a spray chamber, according to an embodiment.

DETAILED DESCRIPTION

[0029] The document US 6,646,879 mentioned above suffers from various drawbacks. The spraying chamber described therein is designed to spray coolant on a plurality of electronic components at the same time. The flow of coolant is not optimized for each electronic component, thereby reducing efficiency and potentially not achieving ideal heat transfer.

[0030] Moreover, the device described in document US 6,646,879 uses spray chambers that encompass more than just the heated surface, and has a specially designed circuit board and specially designed sockets for installing the spray chambers and remainder of the device. All of this increases the overall cost of the device, makes its installation more complex and requires substantial modification of the circuit board or a circuit board specifically designed to support the device. Cleaning, maintaining and removal of the device is also complicated.

[0031] There will be described below a cooling system that can be mounted on an existing circuit board, CPU socket and CPU, or on a standard circuit board, CPU socket and CPU without requiring modifications to the circuit board, CPU socket or CPU. The cooling system described below can also have its flow adapted for optimal heat removal of a single CPU. The spray chamber of the cooling system has also been designed for ease of customization, maintenance and cleaning. Finally, the cooling system comprises a spray

chamber that is specifically designed to be installed in a hermetically sealed fashion along the perimeter of the exposed cooling surface of a CPU and to use the standard fastening mechanisms of the CPU socket; additional electrical insulation or hermetic seals are not required to protect any other components of the computer system because the coolant is sealed between the exposed cooling surface of the CPU and the remainder of the closed-loop cooling system, thereby making the cooling system very practical.

[0032] It should be noted that the presently described device and system is capable of both single-phase (liquid) and two-phase (liquid and vapor) spray cooling. The spray cooling cases therefore cover embodiments where either none of the coolant is vaporizing or only a portion of the coolant is being vaporized.

[0033] Referring to Fig. 1, there is shown a cooling system **100**. The cooling system **100** comprises a spray chamber **10**, which is mounted directly on a CPU **5** (central processing unit). It should be understood that the "CPU" also encompasses specific varieties of processing units, such as a GPU (graphical processing unit). It should also be understood that "CPU" encompasses any kind of computer processor, microprocessor, etc. on computer chip.

[0034] The spray chamber **10** is mounted on the exposed cooling surface of a single CPU **5** only. This is useful to adjust the flow of coolant that will pass therethrough. Although, another embodiment could include a single system with multiple spray chambers, each spray cooling individual processors in parallel, or, in some cases, in series.

[0035] As described further below, the spray chamber **10** is a two-part device that contains a hollow chamber therein for putting a coolant into direct contact with the exposed cooling surface of the CPU **5** without having to modify the CPU or install additional protection against wetting.

[0036] The coolant should be carefully selected, since the coolant must be compatible with direct contact with the exposed cooling surface of the CPU **5**. Most notably, according to an embodiment, the coolant is electrically-insulating if there are any exposed electrical connections on the exposed cooling surface of the CPU **5**. Any coolant with favorable heat transfer properties is suitable for the system. In a two-phase spray cooling embodiment, a coolant with a saturation temperature lower than maximum allowable spray surface temperature would be suitable. In a single-phase spray cooling embodiment, a coolant with a higher saturation temperature would be preferable.

[0037] Providing direct contact between the coolant and the exposed cooling surface of the CPU **5** provides for very efficient heat removal, since the cold plate and thermal interface material, usually required in existing CPU cooling devices, do not need to be provided in the cooling system **100** described herein.

[0038] This coolant flows in a coolant-circulation assembly **50**, made of tubing, hoses or anything similar that can transport coolant. The coolant-circulation assembly **50** is shown in Fig. 1. According to an embodiment, the coolant-circulation assembly **50**, together with the other components of the cooling system **100**, forms a closed-loop through which the coolant circulates to act upon the CPU **5** inside the spray chamber **10**. A closed loop is preferable because it requires a lesser quantity of coolant and keeps the system sealed.

[0039] In an embodiment, a filter **52** is provided in the cooling system **100** to prevent the spray nozzles **17** from becoming blocked by debris in the system. The filter **52** would typically be placed just prior to the spray nozzles **17** (or the lid inlet **13** of the spray chamber **10**).

[0040] In another embodiment, some aspects of the cooling loop, such as the heat rejection, are handled outside of the computer. In such an embodiment, the cooling loop would not necessarily have to be closed.

[0041] A pump **40** is provided at some location in the loop to provide the mechanical energy that is required to have the coolant flow and make the cooling system **100** work.

[0042] A reservoir **30** is further provided to store coolant therein and to ensure that there is a sufficient quantity of coolant inside the cooling system **100**. Coolant can be replaced or inserted through this reservoir **30**. If sufficient volume exists in the fluid loop of the system, a dedicated coolant reservoir may not be necessary.

[0043] As described further below, the coolant is expected to evaporate in the spray chamber **10** during two-phase cooling. However, the coolant preferably flows in the pump and the coolant-circulation assembly **50** in a liquid state. Moreover, the coolant, after having absorbed heat from the CPU **5** and potentially evaporating, should have a place to release the stored thermal energy. This place is the heat rejection unit **20**. The heat rejection unit **20** expels the coolant's gained thermal energy from the spray cooling process out of the system, and the coolant should ideally return to ambient temperature. This also brings any vaporized coolant back to its liquid state. The thermal energy is typically expelled to the immediate environment by passing through a system with a large surface area that is being convectively cooled. In two-phase cooling, the heat rejection unit would typically take the form of a condenser. In single-phase cooling, the heat rejection unit would typically take the form of a radiator.

[0044] According to an embodiment, the heat rejection unit **20** comprises a set of serpentines, or any other thermally-conductive material shaped so as to offer a large area of contact with the surroundings where heat can be rejected. In the heat rejection unit **20**, the coolant is allowed to release its thermal energy and condense back to its liquid state, with a lower temperature.

[0045] Therefore, in the close-loop configuration, the coolant is stored in a reservoir **30** in a liquid state, and pumped by a pump **40** into the spray chamber

10, where heat is absorbed from the CPU **5**. When the coolant exits from the spray chamber **10**, it is brought into the heat rejection unit **20**, where the coolant releases the heat it absorbed and returns to the liquid state. A coolant-circulation assembly **50** is used to transport the coolant between each component of the cooling system **100**.

[0046] According to an embodiment, the CPU **5** includes surface enhancement of the exposed cooling surface in order to improve heat transfer of the spray cooling.

[0047] According to another embodiment, a thermal conditioning unit (not shown) is added to the cooling system **100**. The thermal conditioning unit can be placed either after the pump **40** or just before the pump **40**. The thermal conditioning unit modifies the temperature of the coolant prior to it being sprayed. In single-phase spray cooling, it is typically used to subcool the coolant to temperatures potentially below the ambient temperature to improve heat transfer. In two-phase spray cooling, it is typically used to preheat the coolant to a temperature closer to the saturation temperature of the coolant. It has been shown that this can improve heat transfer in two-phase spray cooling because the coolant can vaporize more quickly when it impinges on the surface to be cooled. The thermal conditioning unit can take many forms. One example is a Peltier-style device.

[0048] Furthermore, an additional pump (not shown) can be provided at the outlet of the spray chamber **10**. This additional pump would have two functions: preventing any build-up of coolant at the spray chamber outlet **18** and potentially moving coolant upwards against gravity towards the heat rejection unit **20**. This would mainly be useful in the single-phase spray cooling inverted case.

[0049] Now referring to Fig. 2, there are shown the details of the two-part spray chamber **10**.

[0050] The spray chamber **10** comprises an enclosure made up of spray chamber walls **11** and a spray chamber lid **12** which, together, define a hollow enclosure having a bottom opening, i.e., the spray chamber **10**. The walls **11** together form a wall assembly defining an enclosure with a top opening and a bottom opening; the lid **12** covers the top opening of the wall assembly in a sealable manner. Providing the spray chamber **10** as a two-part device helps in cleaning and maintaining the system since the spray chamber **10** can be split in two separate parts. Furthermore, the spray chamber lid **12** can be removed while keeping the spray chamber walls **11** attached to the CPU. This will allow the safe removal of any remaining coolant on the CPU without the coolant having a chance to leak onto the rest of the computer system.

[0051] Lastly, the modular design of the spray chamber lid **12** allows new lids with (a) different spray nozzle(s) **17**, with different spray nozzle array patterns, or with different inlet and outlet locations to be easily interchanged into the spray chamber **10**.

[0052] According to an embodiment, the spray chamber lid **12** could have either a single spray nozzle or different array and number of spray nozzles. The nozzles **17** can also be oriented at different angles, individually or as a group. Furthermore, spray nozzle **17** refers to all types of spray nozzles.

[0053] The enclosure made up by the walls **11** is to be mounted on the exposed cooling surface of the CPU **5** in a sealable manner. Most of the CPU **5** will thus lie inside or directly under the chamber defined within the walls **11**, and its cooling surface is exposed to the coolant that impinges on it.

[0054] Since the spray chamber **10** comprises side walls **11** and a lid **12**, the spray chamber **10** is open at its bottom. Any fluid that would be inside the spray chamber **10** would thus be in fluid communication with whatever lies inside or directly under the spray chamber **10**. Therefore, when the spray chamber **10** is

mounted on a CPU **5**, any fluid inside the spray chamber **10** is in direct contact with the exposed cooling surface of the CPU **5**.

[0055] Even though, according to an embodiment, the spray chamber **10** comprises two distinct and separate parts, they need to be fastened together in order to work. The spray chamber lid **12** is fastened on the spray chamber walls **11**, as suggested by the dotted arrows of Fig. 2, via a lid fastening system **16**. Any fastener that can firmly hold together the chamber lid **12** on the spray chamber walls **11** can be used in the lid fastening system **16**, e.g., screws, pins, hooks, etc.

[0056] Once the spray chamber lid **12** is fastened on the spray chamber walls **11**, the spray chamber **10** needs to be fastened to the board. A board fastening system **15** is provided. Again, any suitable fastening means can be used, such as screws, pins, hooks, etc. According to an embodiment, the board fastening system **15** comprises arms at each corner of the spray chamber walls **11** (shown in Fig. 2) that can be bolted or screwed (i.e., attached in some way) to the heatsink mounting mechanism of the board (shown in Fig. 1). The heatsink mounting mechanism is typically part of the ILM of the CPU socket, which is built into the board. Specifically, the mounting mechanism typically comprises four screw holes in a standard pattern.

[0057] The modular design of the spray chamber walls **11** allows different walls that are compatible with the heat sink mounting mechanisms of other CPU sockets to be used without requiring any modification to the more complex spray chamber lid **12**. This is advantageous when compared to most processor spray cooling prior art technologies which are designed in such a way that they must be built into the computer system/motherboard/CPU socket/CPU or require significant modification to an existing system in order to be used. The presently described design offers the advantage of being able to be used right away in existing computer systems (i.e., it can replace the current CPU cooling system/ heat sink in current computer systems). No modifications need to be made to the

CPU, the CPU's socket, or the motherboard. It provides a fastening system **15** that is compatible with certain CPU socket types. This fastening system **15** can be configured to be compatible with pretty much any CPU socket type by changing the fastening arms of the spray chamber wall. According to an embodiment, the fastening system is compatible with standard ILM heatsink mounting systems such as one of: a square ILM (80x80mm mounting hole pattern for example), or a narrow ILM (56x94mm mounting hole pattern for example).

[0058] The board fastening system **15** should provide a firm fastening so that the junction between the bottom of the spray chamber walls **11** and the CPU **5** forms a hermetic seal. The fluid inside the spray chamber **10** shall cool the CPU **5** but not escape from the spray chamber **10** to the surroundings. The same applies to the junction between the spray chamber lid **12** and the spray chamber walls **11**.

[0059] According to an embodiment, the spray chamber lid **12** is itself hollow (not shown); it has a reservoir therein where the inlet coolant can accumulate. Coolant first enters the spray chamber lid **12** from the lid inlet **13**, which communicates with the pump **40**. Upon inflow of coolant into the spray chamber lid **12**, the coolant accumulates and pressurizes therein (in the lid reservoir) under the effect of the pump **40** and is forced to flow through the nozzles **17**.

[0060] According to another embodiment, the chamber lid **12** comprises channels or tubing therein to transport the coolant from the lid inlet **13** to the nozzles **17** rather than a reservoir. When the coolant flows through the nozzles **17**, it is propelled into the spray chamber **10** in the form of droplets. These droplets of coolant are projected onto the exposed cooling surface of the CPU **5** at the open bottom of the spray chamber **10**. According to another embodiment, there is only one spray nozzle.

[0061] Since the exposed cooling surface of the CPU **5** is very hot when the CPU **5** is working, the droplets of coolant that impinge on the CPU **5** rapidly heat up and, in the case of two-phase cooling, vaporize while absorbing the thermal energy from the electronic components of the CPU **5**.

[0062] The coolant is channeled to the outer perimeter of the spray chamber lid **12** around the inlet reservoir, where it is allowed to outflow through the outlet **14** (via chamber outlet **18**), shown in Fig. 2, in order to reach the heat rejection unit **20** thereafter. It is understood that the location of the lid inlet **13** and outlet **14** can be modified. For example, they could be located on top of the spray chamber lid **12**.

[0063] Another embodiment of the design would include quick-disconnect fittings (not shown) at the inlet **13** and outlet **14** connections of the spray chamber lid **12**. These would allow the spray chamber lid **12** to be easily disconnected from the tubing **50**. Therefore, the spray chamber lid **12** could be easily disconnected from both the spray chamber walls **11** and its connected tubing **50**, which would improve ease of maintenance, cleaning and customization.

[0064] The standard orientation of the system is to have the exposed cooling surface of the CPU **5** facing upward, and the spray chamber nozzles **17** spraying downwards to hit the CPU **5.** However, another common orientation is to have the server motherboard upside down such that the exposed cooling surface of the CPU **5** is facing downward, and the spray chamber nozzles **17** would be spraying upwards to hit the CPU **5**. This can be known as the inverted case. For the single-phase or the part single-phase, part two-phase spray cooling cases, this inversion typically becomes necessary because it allows the (excess) liquid coolant to flow downwards with the force of gravity towards the spray chamber outlet **18**. Furthermore, it is possible to change orientation of the computer system so that the spray nozzles **17** are spraying in a direction that is at other non-standard angles to the vector of gravity.

[0065] In another embodiment, the chamber walls **11** may be provided with an outlet channel to bring the coolant away from the spray chamber **10**.

[0066] According to another embodiment, the spray chamber lid **12** and the spray chamber walls **11** are made from a single block that forms the spray chamber **10**; that is, the spray chamber lid **12** and the spray chamber walls **11** are not, in this other embodiment, two distinct and separate parts.

[0067] According to another embodiment, the pressure in the spray chamber **10** can be modified. In one typical embodiment, a port (not shown) is added to either the reservoir **30** or spray chamber **10** so that a vacuum pump would be applied thereto in order to remove non-condensable gas or coolant vapor from the system and change the pressure.

[0068] While preferred embodiments have been described above and illustrated in the accompanying drawings, it will be evident to those skilled in the art that modifications may be made without departing from this disclosure. Such modifications are considered as possible variants comprised in the scope of the disclosure.

CLAIMS:

1. A spray chamber for cooling a computer processor on a circuit board, the spray chamber comprising:

- a wall assembly for sealable mounting on an exposed cooling surface of the computer processor defining an enclosure having a top opening and a bottom opening which opens on the exposed cooling surface of the computer processor; and

- a lid for covering the top opening of the wall assembly in a sealable manner, the lid having a nozzle which sprays coolant that impinges on the exposed cooling surface of the computer processor.

2. The spray chamber of claim 1, further comprising a board fastening system adapted to fasten to the circuit board and to form a hermetic seal between the spray chamber and the exposed cooling surface of the computer processor.

3. The spray chamber of claim 2, wherein the board fastening system comprises mounting arms that are compatible with a standard heatsink mounting mechanism of the circuit board.

4. The spray chamber of claim 3, wherein the heatsink mounting mechanism comprises a standardized screw hole pattern which is a part of the Independent Loading Mechanism (ILM) thereby the mounting arms are compatible with the ILM.

5. The spray chamber of claim 4, wherein the circuit board comprises a computer processor socket that comprises the ILM.

6. The spray chamber of claim 1, further comprising a lid fastening system adapted to fasten and to form a hermetic seal between the wall assembly and the lid.

7. The spray chamber of claim 1, wherein the nozzle comprises more than one nozzle arranged according to an array pattern.

8. The spray chamber of claim 1, further comprising an inlet adapted to receive the coolant and a chamber outlet adapted to allow outflow of coolant from the spray chamber.

9. The spray chamber of claim 8, wherein the inlet and the outlet are located in the lid.

10. The spray chamber of claim 8, wherein the outlet is located in the wall assembly.

11. The spray chamber of claim 1, wherein the lid and the wall assembly are made from a single block that forms the spray chamber.

12. A cooling system for cooling a computer processor on a circuit board, the cooling system comprising:

- a pump for pumping a coolant;

- a heat rejection unit where the coolant can release heat;

- a spray chamber defining an enclosure for enclosing an exposed cooling surface of the computer processor; and

- coolant-circulation assembly for transporting the coolant through the pump, the spray chamber and the heat rejection unit; and

wherein the spray chamber is adapted for spraying coolant on the exposed cooling surface of the computer processor.

13. The cooling system of claim 12, wherein the coolant-circulation assembly, the pump, the spray chamber and the heat rejection unit form a closed-loop for transporting the coolant.

14. The cooling system of claim 13, further comprising a reservoir for holding coolant, the reservoir being integrated in the closed-loop.

15. The cooling system of claim 14, wherein the spray chamber comprises:

- a wall assembly for sealable mounting on an exposed cooling surface of the computer processor defining an enclosure having a top opening and a bottom opening which opens on the exposed cooling surface of the computer processor; and

- a lid for covering the top opening of the wall assembly in a sealable manner, the lid having a nozzle which sprays the coolant that impinges on the exposed cooling surface of the computer processor.

16. The cooling system of claim 15, wherein the lid further comprises a lid reservoir where coolant is accumulated and pressurized by the pump.

17. The cooling system of claim 15, further comprising a board fastening system adapted to fasten to the circuit board and to form a hermetic seal between the spray chamber and the exposed cooling surface of the computer processor.

18. The cooling system of claim 17, wherein the board fastening system comprises mounting arms that are compatible with a standard heatsink mounting mechanism of the circuit board.

19. The cooling system of claim 18, wherein the heatsink mounting mechanism comprises a standardized screw hole pattern which is a part of the Independent Loading Mechanism (ILM) thereby the mounting arms are compatible with the ILM.

20. The cooling system of claim 19, wherein the circuit board comprises a computer processor socket that comprises the ILM.

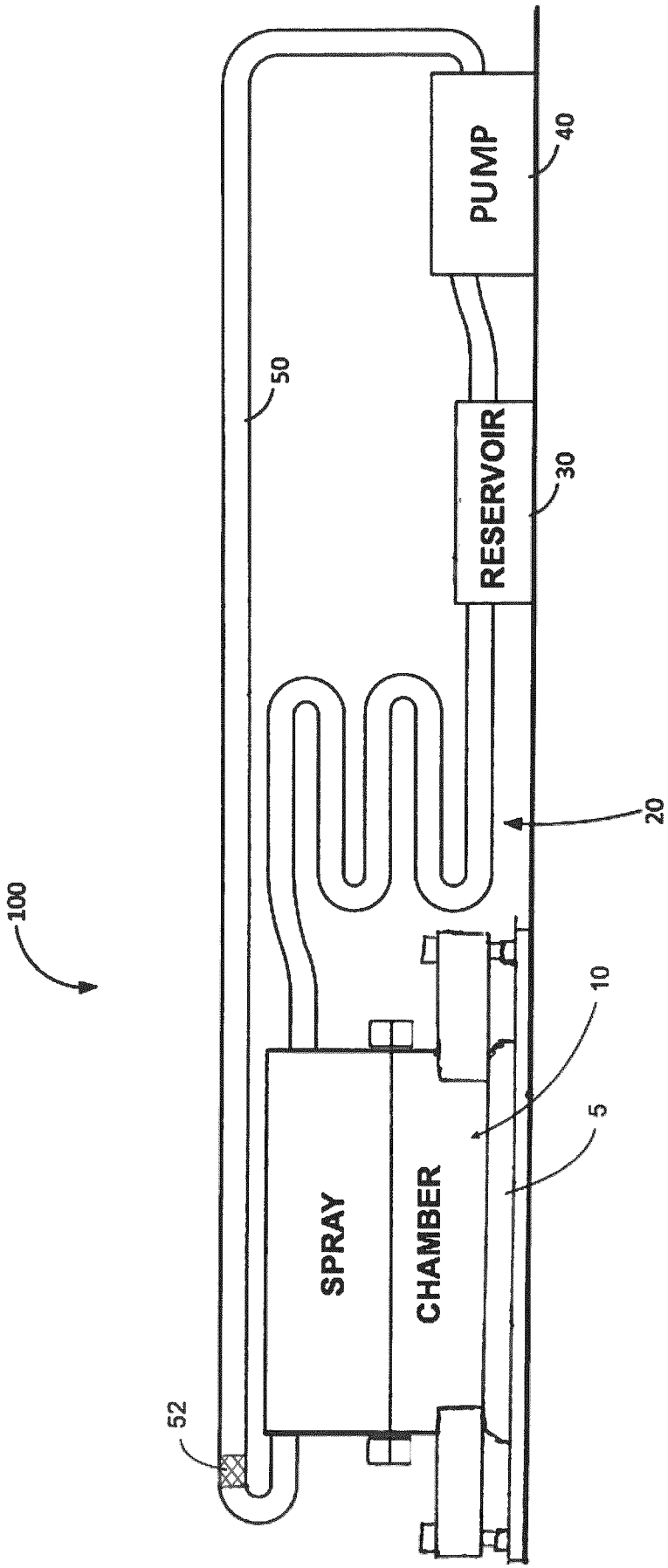

FIGURE 1

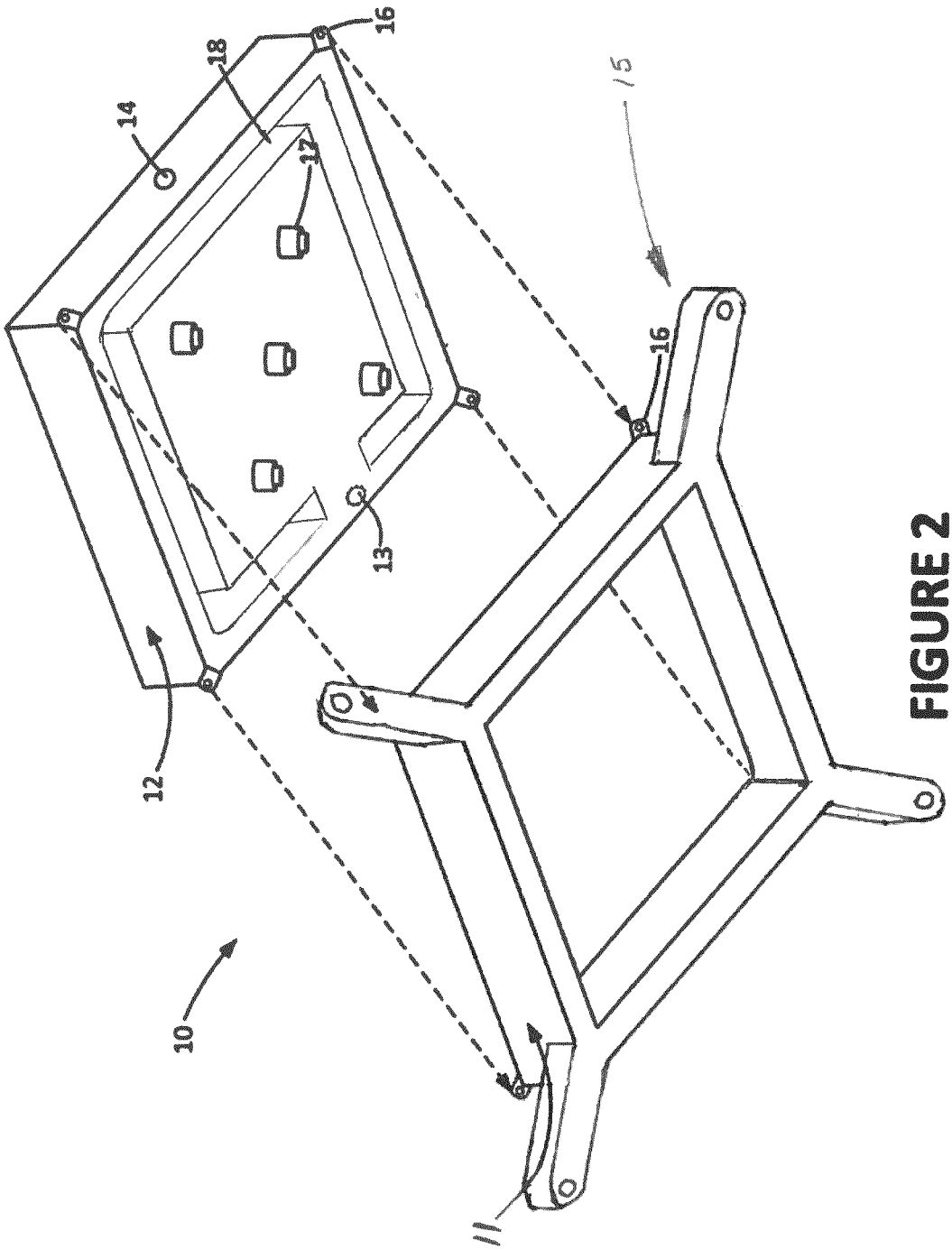

FIGURE 2

INTERNATIONAL SEARCH REPORT

International application No.
PCT/CA2017/050568

A. CLASSIFICATION OF SUBJECT MATTER
IPC: ***H01L 23/473*** (2006.01) , ***H05K 7/20*** (2006.01)

According to International Patent Classification (IPC) or to both national classification and IPC

B. FIELDS SEARCHED

Minimum documentation searched (classification system followed by classification symbols)
IPC: ***H01L 23/473*** (2006.01) , ***H05K 7/20*** (2006.01)

Documentation searched other than minimum documentation to the extent that such documents are included in the fields searched

Electronic database(s) consulted during the international search (name of database(s) and, where practicable, search terms used)
Database: Questel Orbit
Keywords: spray chamber, circuit board, coolant, cpu, wall, pump

C. DOCUMENTS CONSIDERED TO BE RELEVANT

Category*	Citation of document, with indication, where appropriate, of the relevant passages	Relevant to claim No.
X	US6996996 (CADER) 14 February 2006 (14-02-2006)	1-20
A	US7506519 (TILTON et al.) 24 March 2009 (24-03-2009)	1-20
A	US7992626 (TILTON et al.) 9 August 2011 (09-08-2011)	1-20
A	US6550263 (PATEL et al.) 22 August 2002 (22-08-2002)	1-20
A	US6708515 (PATEL et al.) 23 March 2004 (23-03-2004)	1-20
A	US6205799 (PATEL et al.) 27 March 2001 (27-03-2001)	1-20

☐ Further documents are listed in the continuation of Box C.

☑ See patent family annex.

*	Special categories of cited documents:
"A"	document defining the general state of the art which is not considered to be of particular relevance
"E"	earlier application or patent but published on or after the international filing date
"L"	document which may throw doubts on priority claim(s) or which is cited to establish the publication date of another citation or other special reason (as specified)
"O"	document referring to an oral disclosure, use, exhibition or other means
"P"	document published prior to the international filing date but later than the priority date claimed
"T"	later document published after the international filing date or priority date and not in conflict with the application but cited to understand the principle or theory underlying the invention
"X"	document of particular relevance; the claimed invention cannot be considered novel or cannot be considered to involve an inventive step when the document is taken alone
"Y"	document of particular relevance; the claimed invention cannot be considered to involve an inventive step when the document is combined with one or more other such documents, such combination being obvious to a person skilled in the art
"&"	document member of the same patent family

Date of the actual completion of the international search 29 June 2017 (29-06-2017)	Date of mailing of the international search report 15 August 2017 (15-08-2017)
Name and mailing address of the ISA/CA Canadian Intellectual Property Office Place du Portage I, C114 - 1st Floor, Box PCT 50 Victoria Street Gatineau, Quebec K1A 0C9 Facsimile No.: 819-953-2476	Authorized officer Coralie Gill (819) 639-3176

INTERNATIONAL SEARCH REPORT
Information on patent family members

International application No.
PCT/CA2017/050568

Patent Document Cited in Search Report	Publication Date	Patent Family Member(s)	Publication Date
US6996996B1	14 February 2006 (14-02-2006)	US6996996B1	14 February 2006 (14-02-2006)
		US2004051545A1	18 March 2004 (18-03-2004)
		US6857283B2	22 February 2005 (22-02-2005)
		US2004050545A1	18 March 2004 (18-03-2004)
		US6880350B2	19 April 2005 (19-04-2005)
		US6889509B1	10 May 2005 (10-05-2005)
		US7013662B1	21 March 2006 (21-03-2006)
		US7021067B1	04 April 2006 (04-04-2006)
		US7032403B1	25 April 2006 (25-04-2006)
		US7308801B1	18 December 2007 (18-12-2007)
		US7401471B1	22 July 2008 (22-07-2008)
		US7490478B1	17 February 2009 (17-02-2009)
		US7506519B1	24 March 2009 (24-03-2009)
		US2008066889A1	20 March 2008 (20-03-2008)
US7506519B1	24 March 2009 (24-03-2009)	US7506519B1	24 March 2009 (24-03-2009)
		US2004051545A1	18 March 2004 (18-03-2004)
		US6857283B2	22 February 2005 (22-02-2005)
		US2004050545A1	18 March 2004 (18-03-2004)
		US6880350B2	19 April 2005 (19-04-2005)
		US6889509B1	10 May 2005 (10-05-2005)
		US6996996B1	14 February 2006 (14-02-2006)
		US7013662B1	21 March 2006 (21-03-2006)
		US7021067B1	04 April 2006 (04-04-2006)
		US7032403B1	25 April 2006 (25-04-2006)
		US7308801B1	18 December 2007 (18-12-2007)
		US7401471B1	22 July 2008 (22-07-2008)
		US7490478B1	17 February 2009 (17-02-2009)
		US2008066889A1	20 March 2008 (20-03-2008)
US7992626B1	09 August 2011 (09-08-2011)	US7992626B1	09 August 2011 (09-08-2011)
		US7331377B1	19 February 2008 (19-02-2008)
US6550263B2	22 April 2003 (22-04-2003)	US2002113142A1	22 August 2002 (22-08-2002)
US6708515B2	23 March 2004 (23-03-2004)	US2002113141A1	22 August 2002 (22-08-2002)
		JP2005086204A	31 March 2005 (31-03-2005)
		JP4128986B2	30 July 2008 (30-07-2008)
		US2004040328A1	04 March 2004 (04-03-2004)
		US7082778B2	01 August 2006 (01-08-2006)
US6205799B1	27 March 2001 (27-03-2001)	US6205799B1	27 March 2001 (27-03-2001)
		EP1212929A1	12 June 2002 (12-06-2002)
		EP1991041A2	12 November 2008 (12-11-2008)
		EP1991041A3	23 December 2009 (23-12-2009)
		JP2003509874A	11 March 2003 (11-03-2003)
		JP4294899B2	15 July 2009 (15-07-2009)
		US2001002541A1	07 June 2001 (07-06-2001)
		US6349554B2	26 February 2002 (26-02-2002)
		US2002050144A1	02 May 2002 (02-05-2002)
		US6457321B1	01 October 2002 (01-10-2002)
		WO0120962A1	22 March 2001 (22-03-2001)