M. L. CLEMMER.

VEHICLE AXLE LUBRICATOR.

APPLICATION FILED SEPT. 29, 1909.

956,289. Patented Apr. 26, 1910.

Fig. 1.

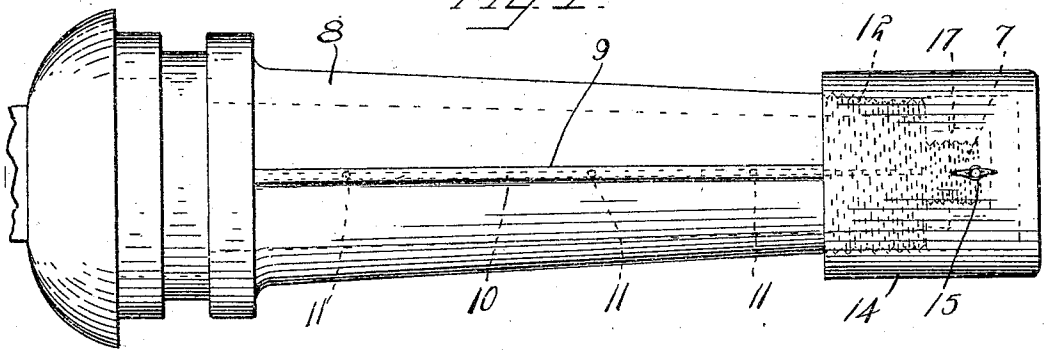

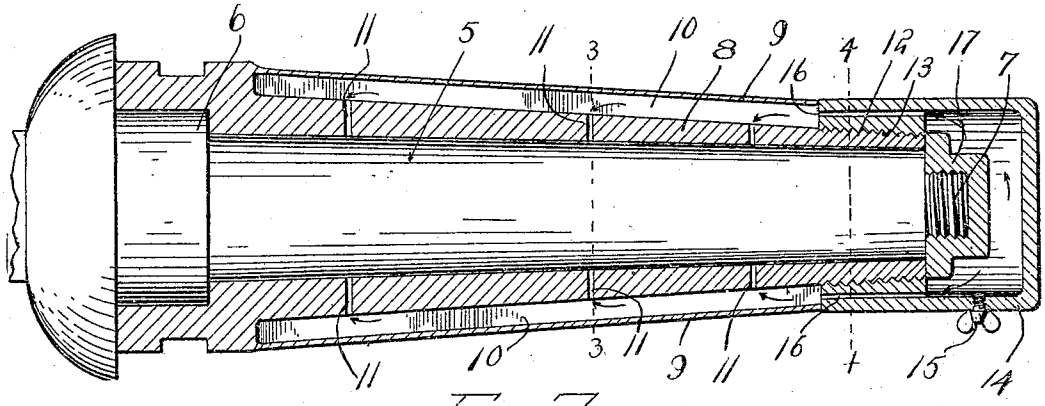

Fig. 2.

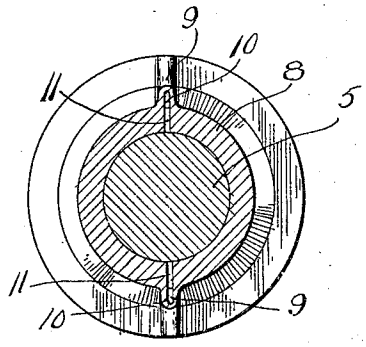

Fig. 3.

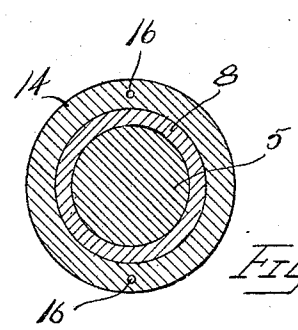

Fig. 4.

Inventor

Martin L. Clemmer.

Witnesses

J. C. Simpson

H. O. Parker

By Chandler Chandler

Attorneys.

ANDREW B. GRAHAM CO., PHOTO-LITHOGRAPHERS, WASHINGTON, D. C.

UNITED STATES PATENT OFFICE.

MARTIN L. CLEMMER, OF BOSTIC, NORTH CAROLINA, ASSIGNOR OF ONE-FOURTH TO COLUMBUS M. MARTIN AND ONE-FOURTH TO GUILFORD E. YOUNG, BOTH OF FOREST CITY, NORTH CAROLINA.

VEHICLE-AXLE LUBRICATOR.

956,289. Specification of Letters Patent. Patented Apr. 26, 1910.

Application filed September 29, 1909. Serial No. 520,182.

To all whom it may concern:

Be it known that I, MARTIN L. CLEMMER, a citizen of the United States, residing at Bostic, in the county of Rutherford, State of North Carolina, have invented certain new and useful Improvements in Vehicle-Axle Lubricators; and I do hereby declare the following to be a full, clear, and exact description of the invention, such as will enable others skilled in the art to which it appertains to make and use the same.

The invention relates to an axle lubricator and more particularly to the class of lubricators for vehicle wheel axles.

The primary object of the invention is the provision of a device of this character in which oil or other lubricant may be supplied from an oil cup to the axle for keeping the same constantly lubricated.

Another object of the invention is the provision of a device of this character in which the axle box has formed thereon hollow ribs with ports forming communication between the axle and ribs so that lubricant may be constantly fed from an oil cup through the ribs to the axle spindle and in this manner the latter will be constantly and thoroughly lubricated.

A further object of the invention is the provision of an axle lubricator which is simple in construction, thoroughly reliable and efficient in operation, and inexpensive in the manufacture.

In the drawings accompanying and forming part of this specification is illustrated the preferred form of embodiment of the invention, to enable those skilled in the art to carry the invention into practice, the details of which are described in the following description, while the novelty of the invention is pointed out in the claims hereunto appended.

In the drawings:—Figure 1 is a side elevation of an axle box constructed in accordance with the invention. Fig. 2 is a longitudinal sectional view of the same. Fig. 3 is a transverse sectional view on the line 3—3 of Fig. 2. Fig. 4 is a sectional view on the line 4—4 of Fig. 2.

Similar reference characters indicate corresponding parts throughout the several views in the drawings.

Referring to the drawings by numerals 5 designates an axle spindle having an annular shoulder 6, at its inner end and a contracted threaded portion 7, at its outer end, the said spindle being of the usual well known construction.

Detachably mounted upon the axle spindle 5 is an axle box 8, the same being formed at its inner end with a socket correspondingly shaped to the annular shoulder 6, for receiving it and this shoulder forms an abutment for the inner end of said box. The said axle box 8, is formed at diametrically opposite points with ribs 9, which extend longitudinally thereof, to a point slightly removed from the outer end of the box and these ribs are formed with oil ducts 10, extending the entire length thereof and opening through their outer ends. At intervals in the axle box 8, are openings 11, the same forming communication between the axle spindle 5 and the oil ducts 10, in the ribs on said box.

The outer end of the axle box 8, is provided with external screw threads 12, the same being engaged by internal threads 13, of an oil cup 14, which latter is adapted to be detachably carried by said axle box. Threaded in the oil cup 14, at one side thereof is a removable plug 15, the latter serving to close the port through which is introduced oil for the filling of the oil cup.

At diametrically opposite points in the wall of the oil cup 14, are oil passages 16, which latter are adapted to register with the oil ducts 10, in the ribs 9, on the axle box so as to form communication between said ducts 10, and the oil cup and in this manner oil will be permitted to flow from the oil cup to the axle spindle 5, for lubricating the same.

On the threaded portion 7 of the axle spindle 5 is carried the usual axle nut 17, which performs its usual function for holding the vehicle hub on the axle. It is of course understood and well known that the ribs 9, engage the hub of a vehicle wheel so as to hold the axle box rigidly within the said hub.

What is claimed is:—

1. An axle box comprising a hollow cylindrical body having formed exteriorly thereof diametrically opposed hollow ribs, each being open at its outer end and terminating at a distance from said outer end, the said box being provided with apertures estab-

lishing communication between the hollow ribs and the hollow of the box, the said box being provided with threads exteriorly thereof at its outer end, and an oil cup having an inwardly directed annular shoulder in threaded engagement with the threaded end of the box and containing passages adapted to register with the hollow ribs to establish communication between the latter and the cup.

2. The combination with an axle box having hollow external ribs in communication with the hollow of the box and open at their outer ends, of an oil cup having an inwardly directed annular shoulder in threaded engagement with one end of the box and abutting against the outer ends of the ribs, the said annular shoulder being provided with passages establishing communication between the cup and said ribs.

In testimony whereof, I affix my signature, in presence of two witnesses.

MARTIN L. CLEMMER.

Witnesses:

JOSEPH C. HANILL,

BENJAMIN H. LONG.