US 20110271955A1

(19) **United States**

(12) **Patent Application Publication**

PALOMO et al.

(10) **Pub. No.: US 2011/0271955 A1**

(43) **Pub. Date: Nov. 10, 2011**

(54) **SURGICAL MASK**

(75) Inventors: **Joseph PALOMO**, Antioch, IL (US); **Stephanie Carroll**, Winthrop Harbor, IL (US); **Sara Wegener**, Libertyville, IL (US); **Christopher Aguilar**, El Paso, TX (US); **Joe Miller**, El Paso, TX (US)

(73) Assignee: **ALLEGIANCE CORPORATION**, McGaw Park, IL (US)

(21) Appl. No.: **13/103,570**

(22) Filed: **May 9, 2011**

Related U.S. Application Data

(60) Provisional application No. 61/332,536, filed on May 7, 2010.

Publication Classification

(51) **Int. Cl.**
A41D 13/11 (2006.01)

(52) **U.S. Cl.** **128/201.17**; 128/206.19; 128/206.16

(57) **ABSTRACT**

A surgical mask provides a wide range of wearers with a good fit and improved comfort, facilitates proper use of the mask, and reduces or eliminates fogging of eyewear, as compared with typical masks. The mask may include a pair of ties that are joined to the upper, central, and lower parts of either side of the body of the mask with the assistance of restraint members. The mask may also include a sealing member that reduces or eliminates gaps between the wearer's face and the upper part of the mask by forming a seal between the wearer's face and the mask in use. In addition, the mask may include a barrier panel that reduces or prevents the wearer's breath from escaping through the mask and rising to the wearer's eyewear.

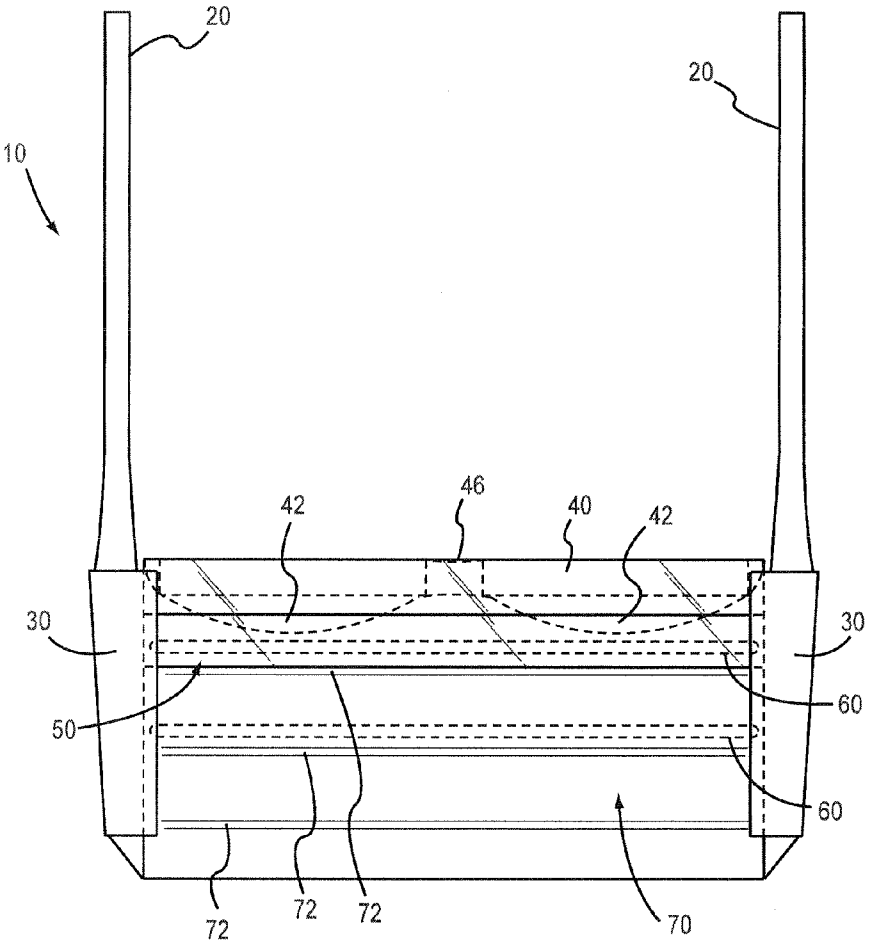

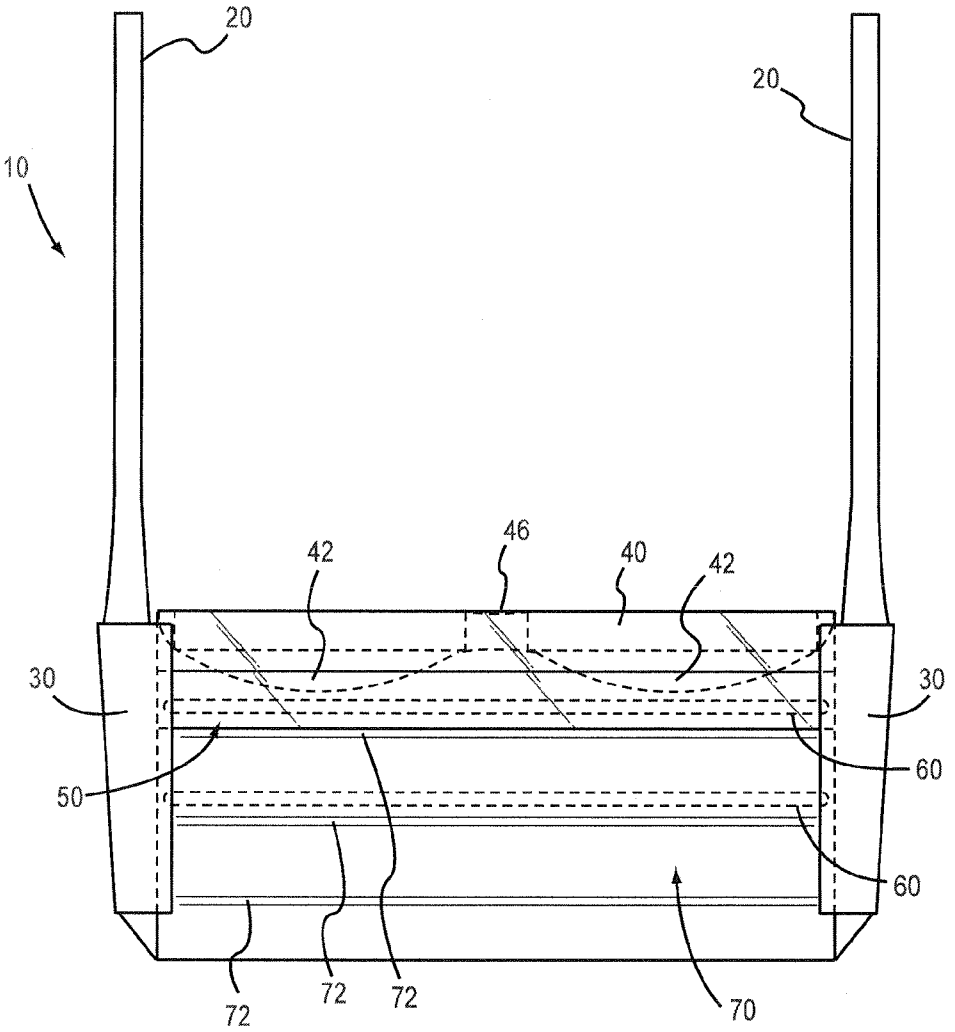

FIG.1

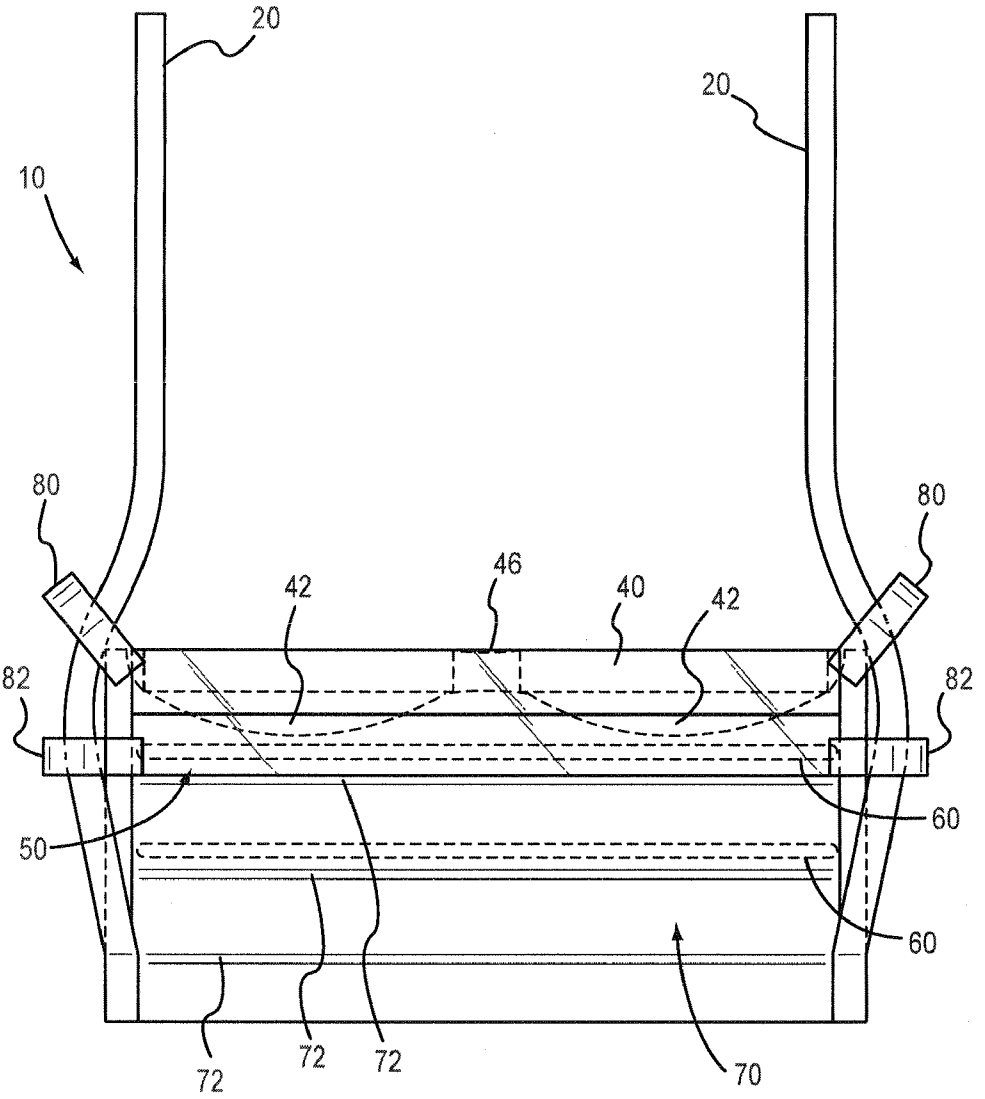

FIG.2

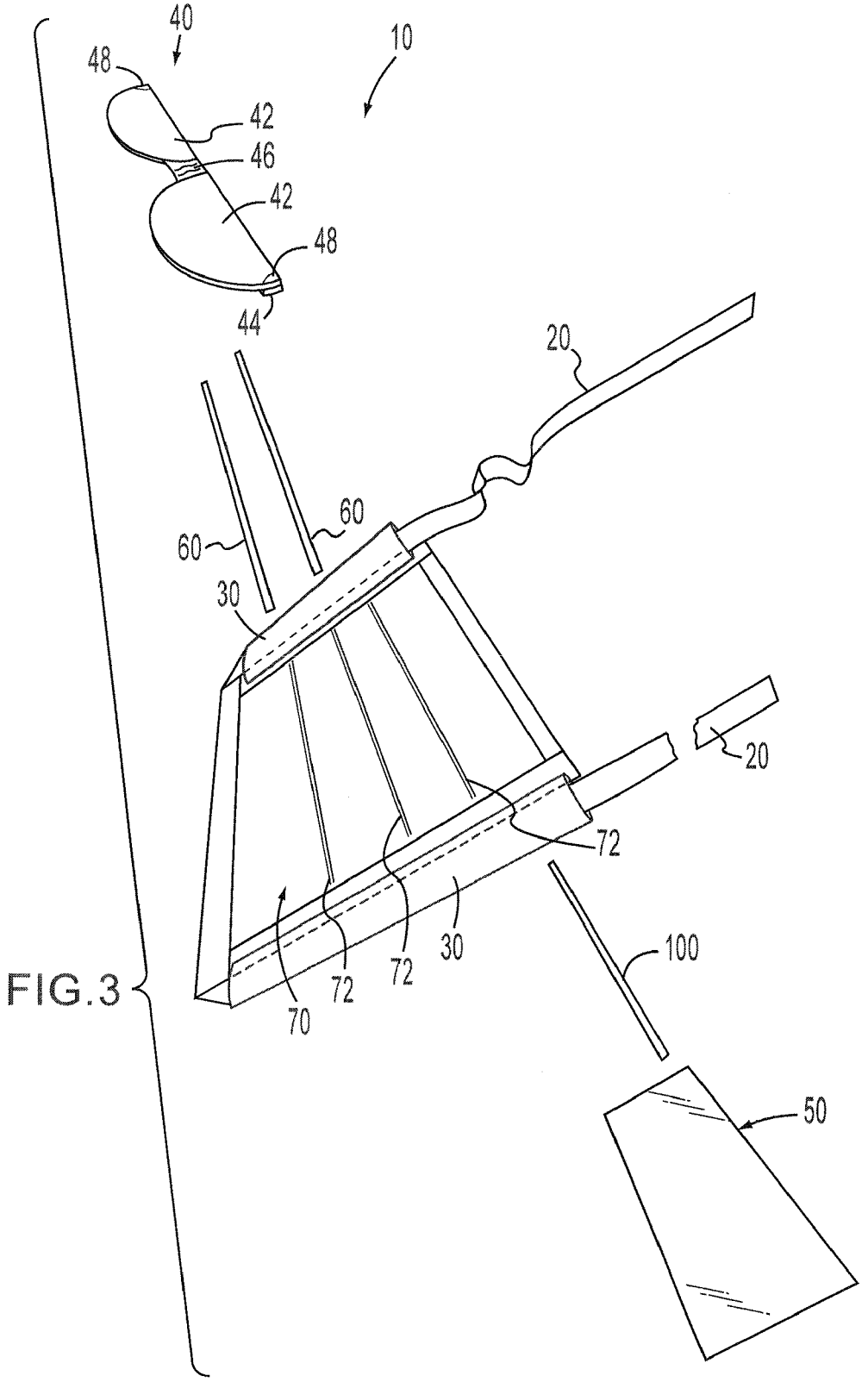

FIG.3

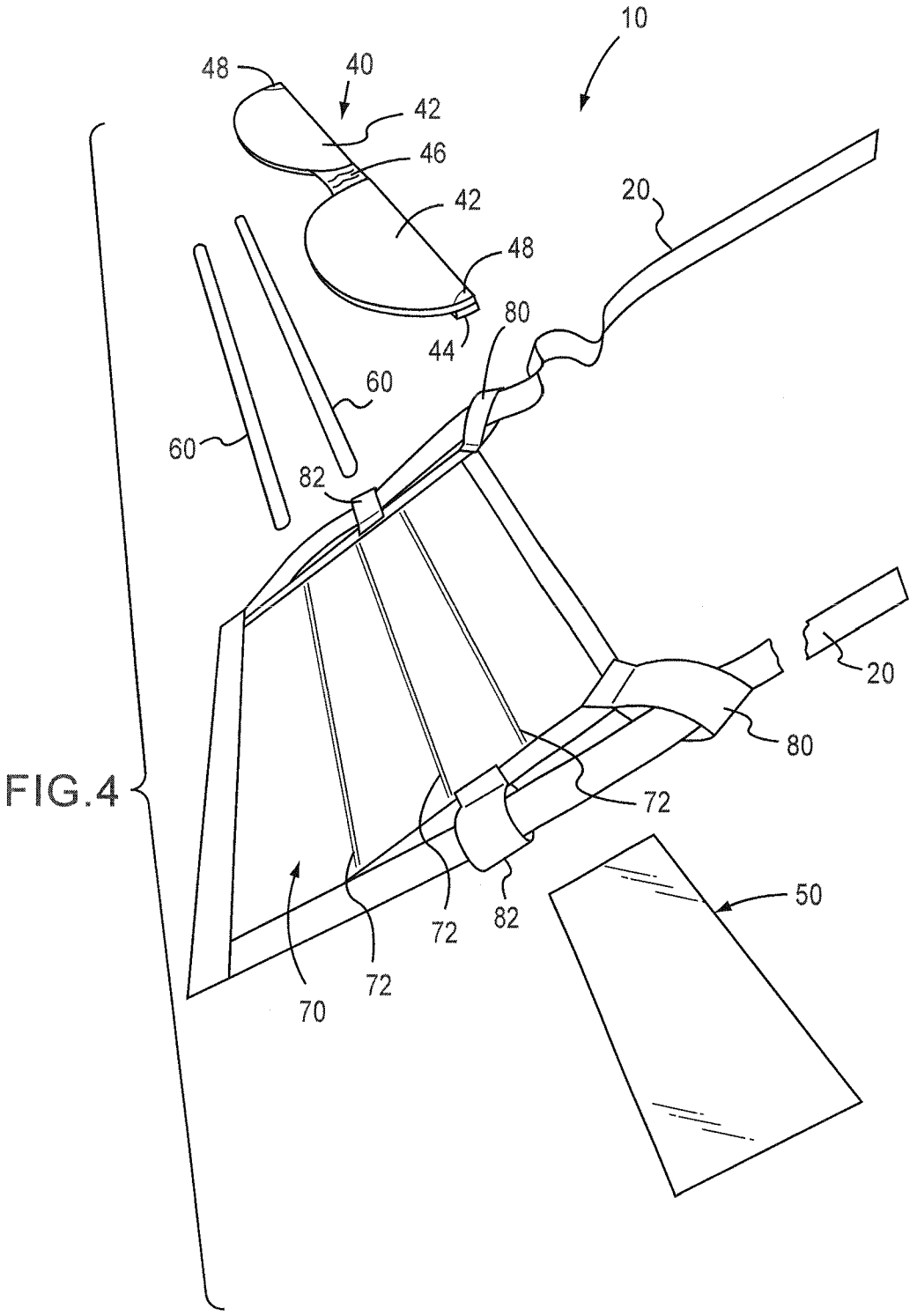

FIG.4

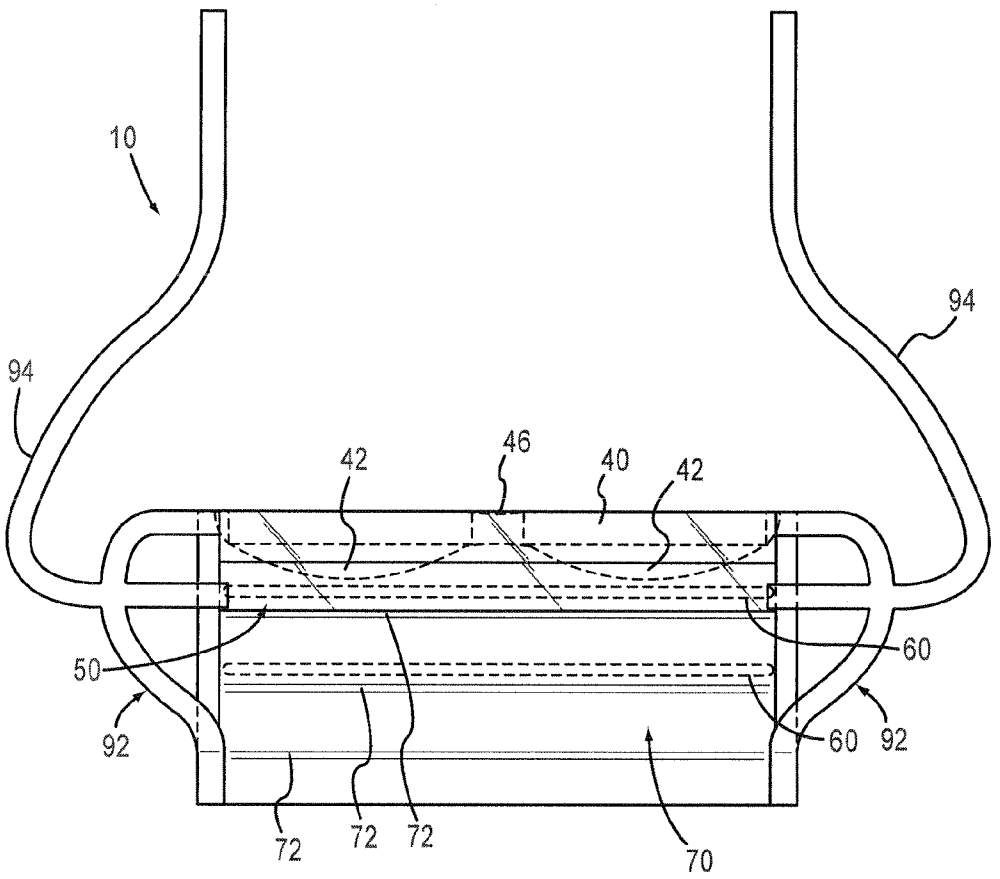

FIG.5

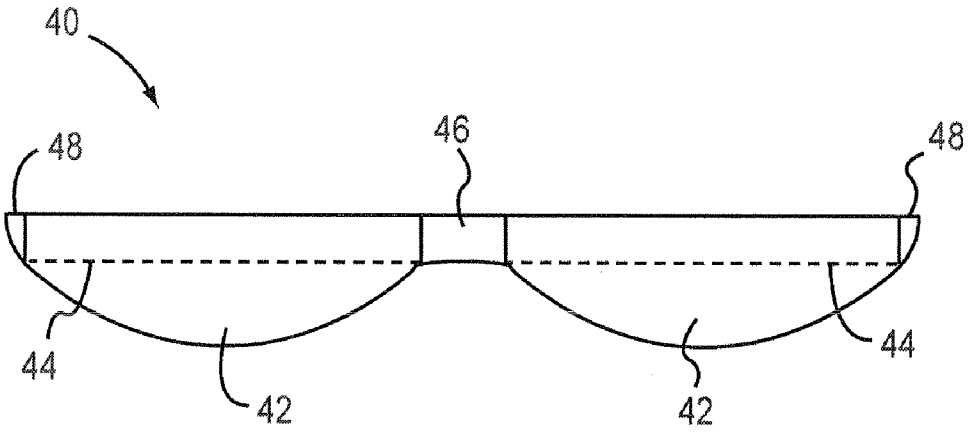

FIG.6a

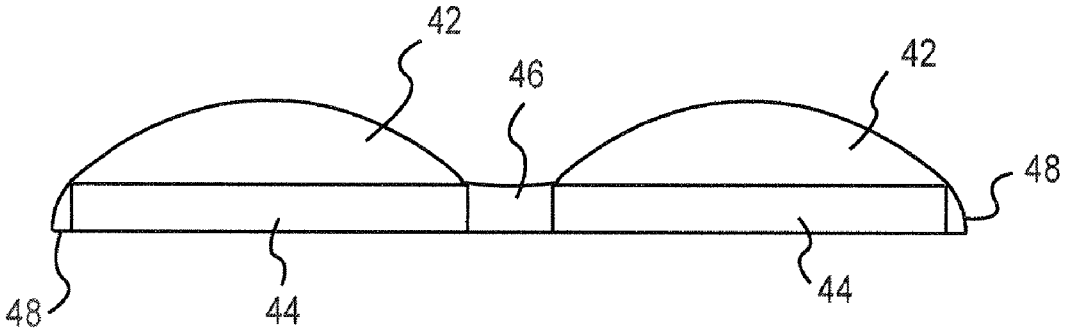

FIG.6b

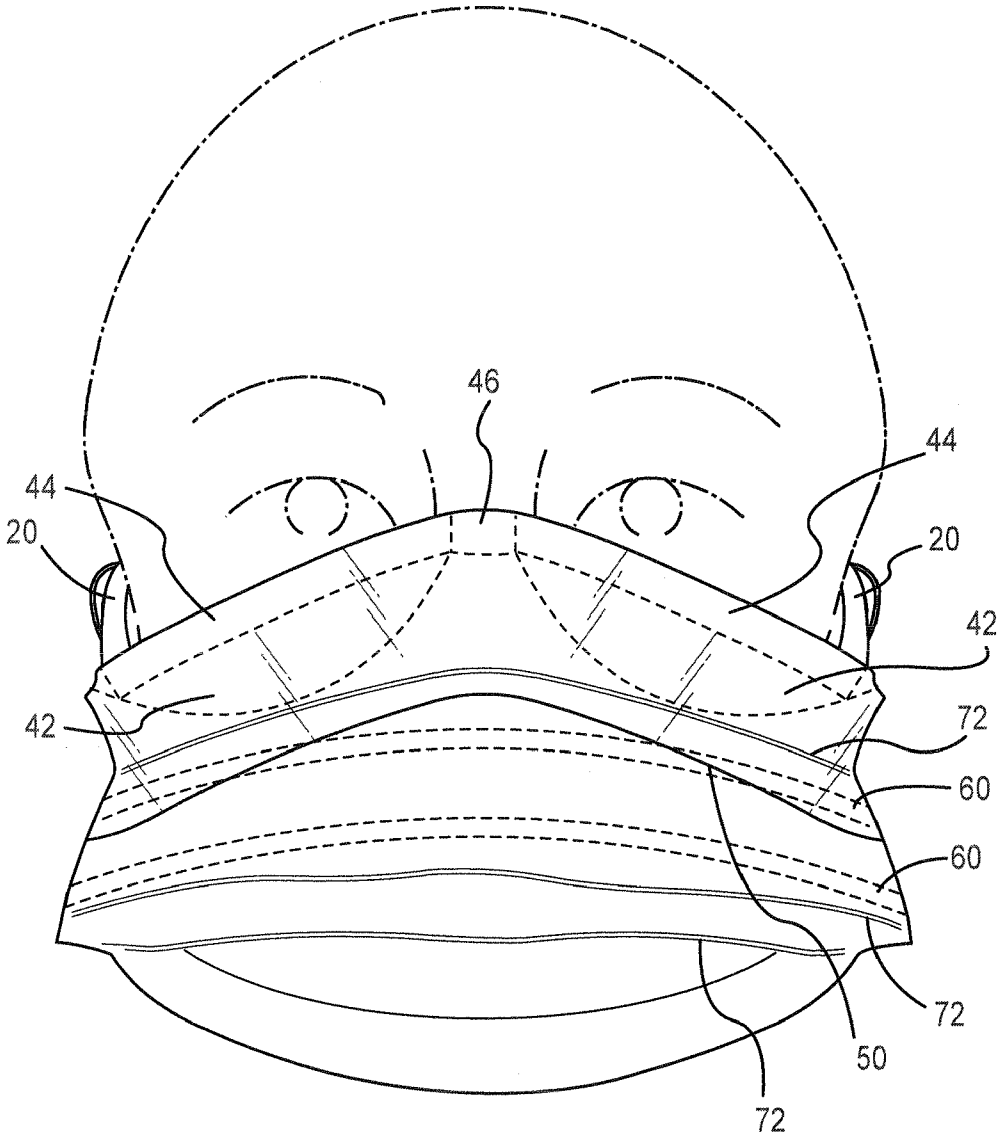

FIG.7

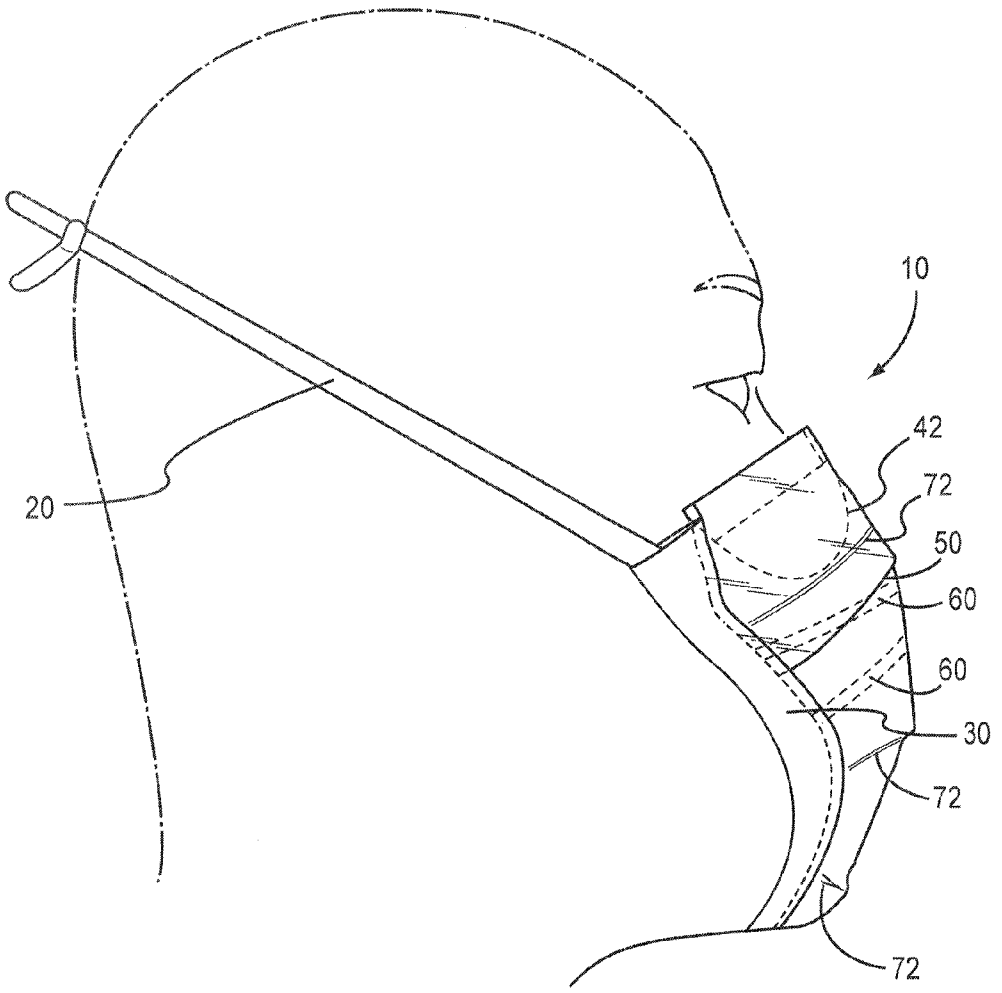

FIG.8

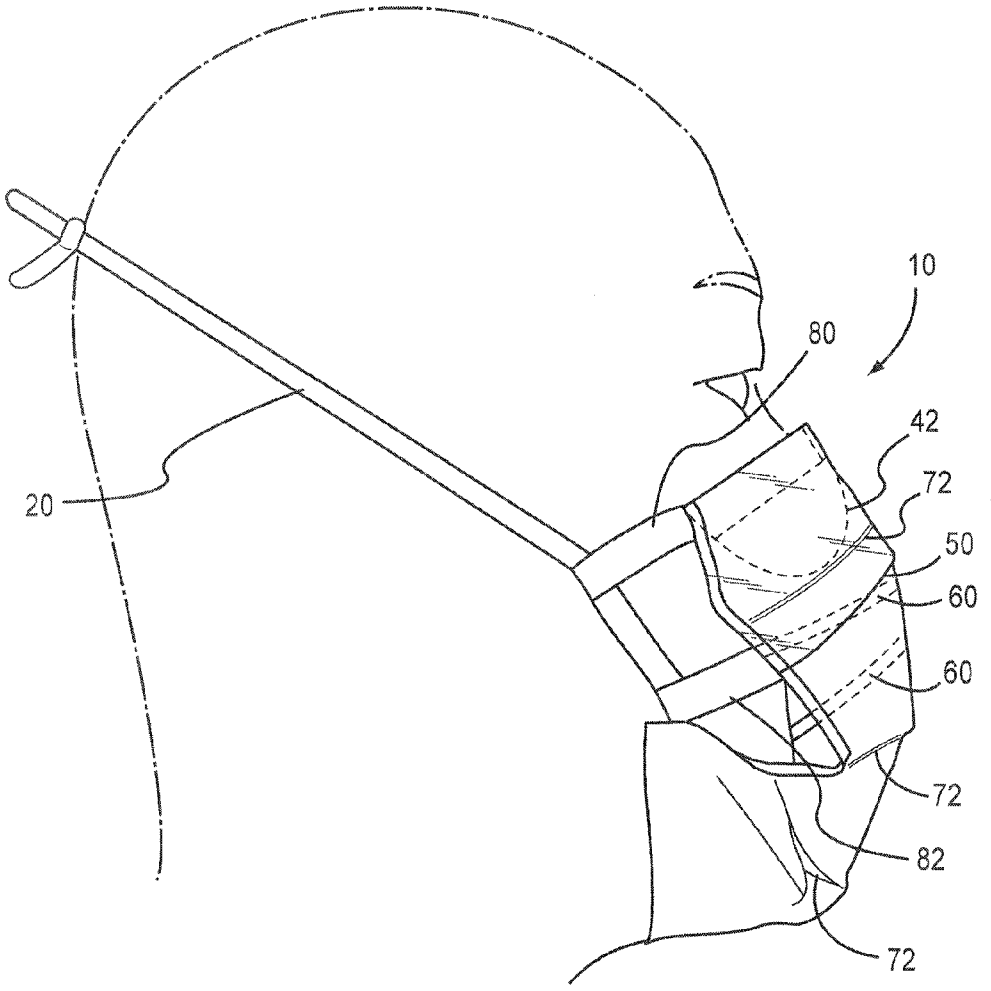

FIG.9

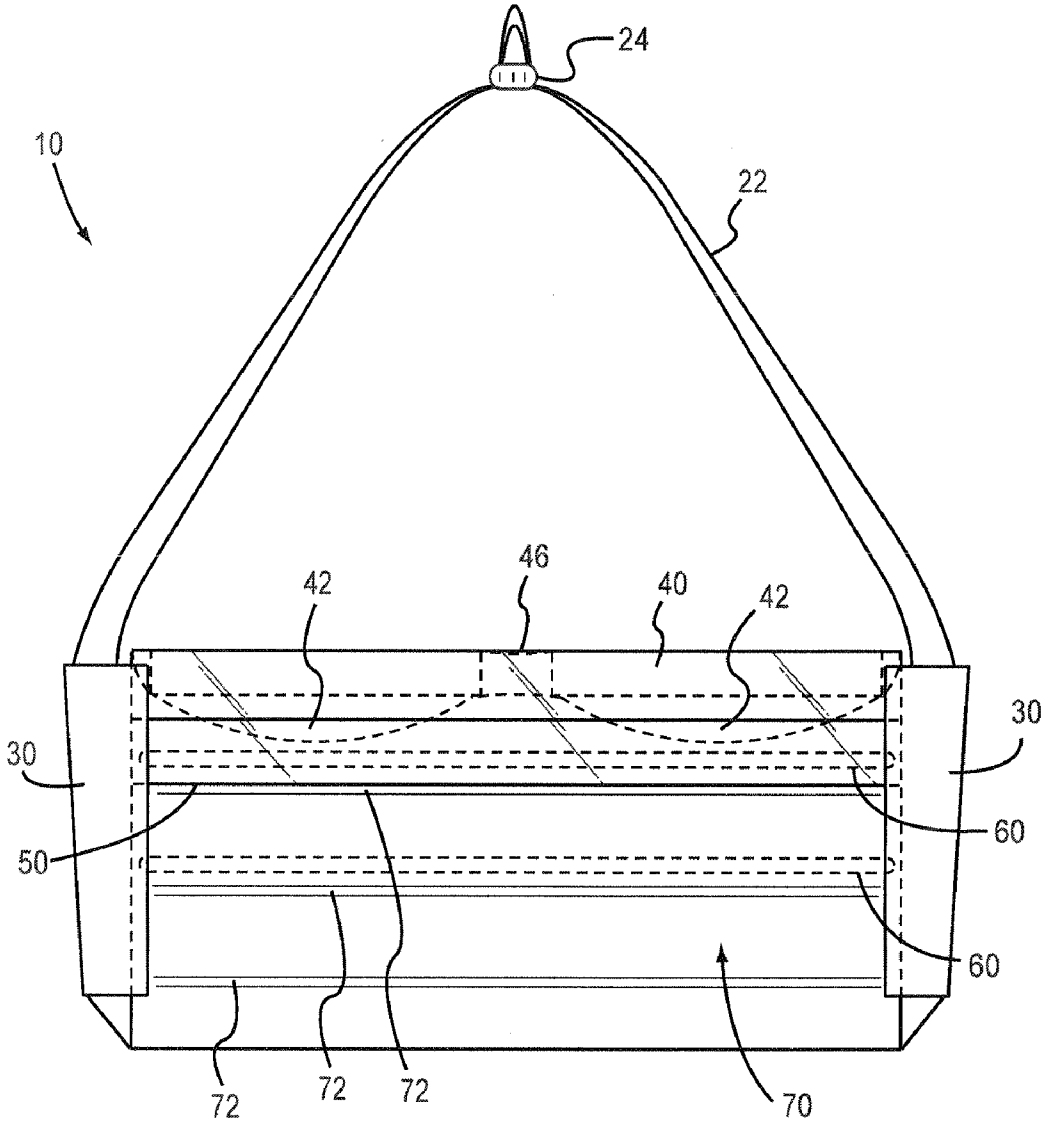

FIG.10

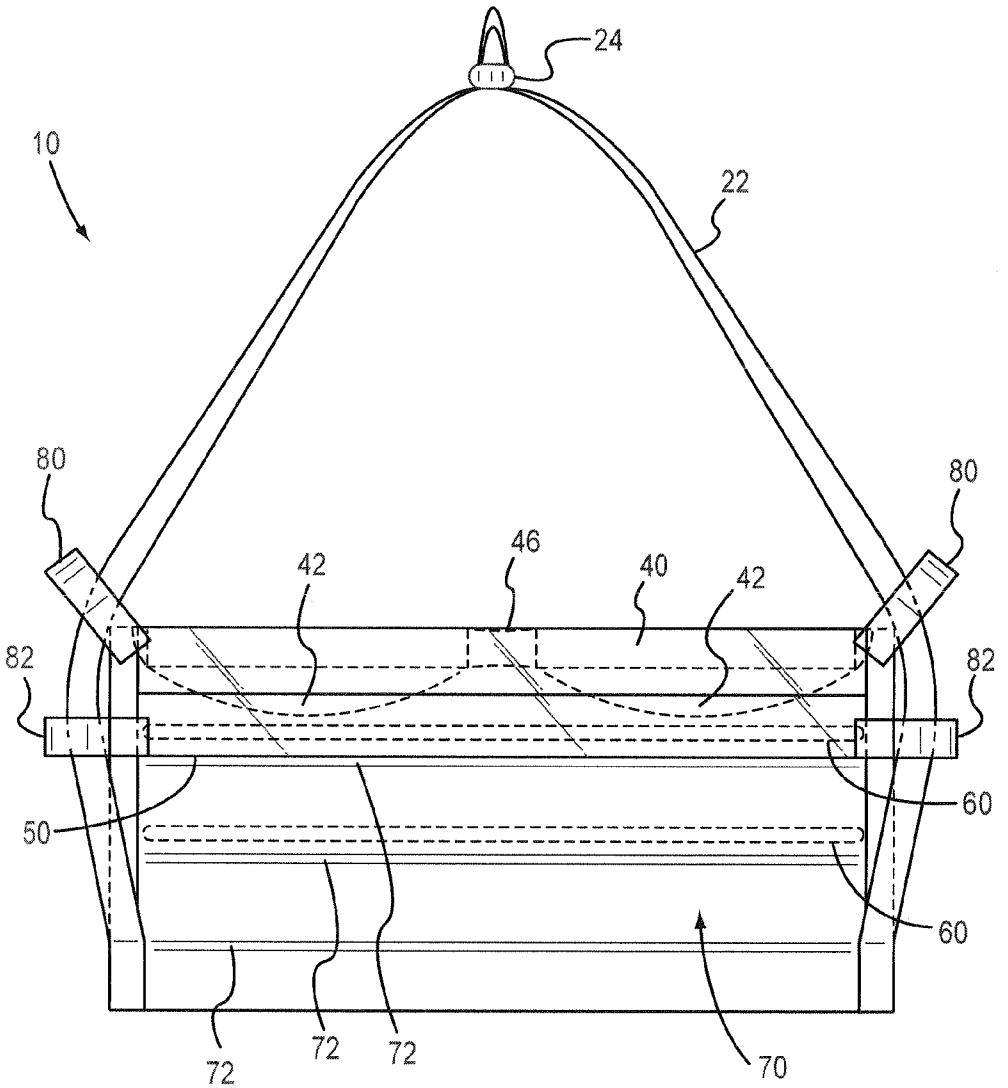

FIG.11

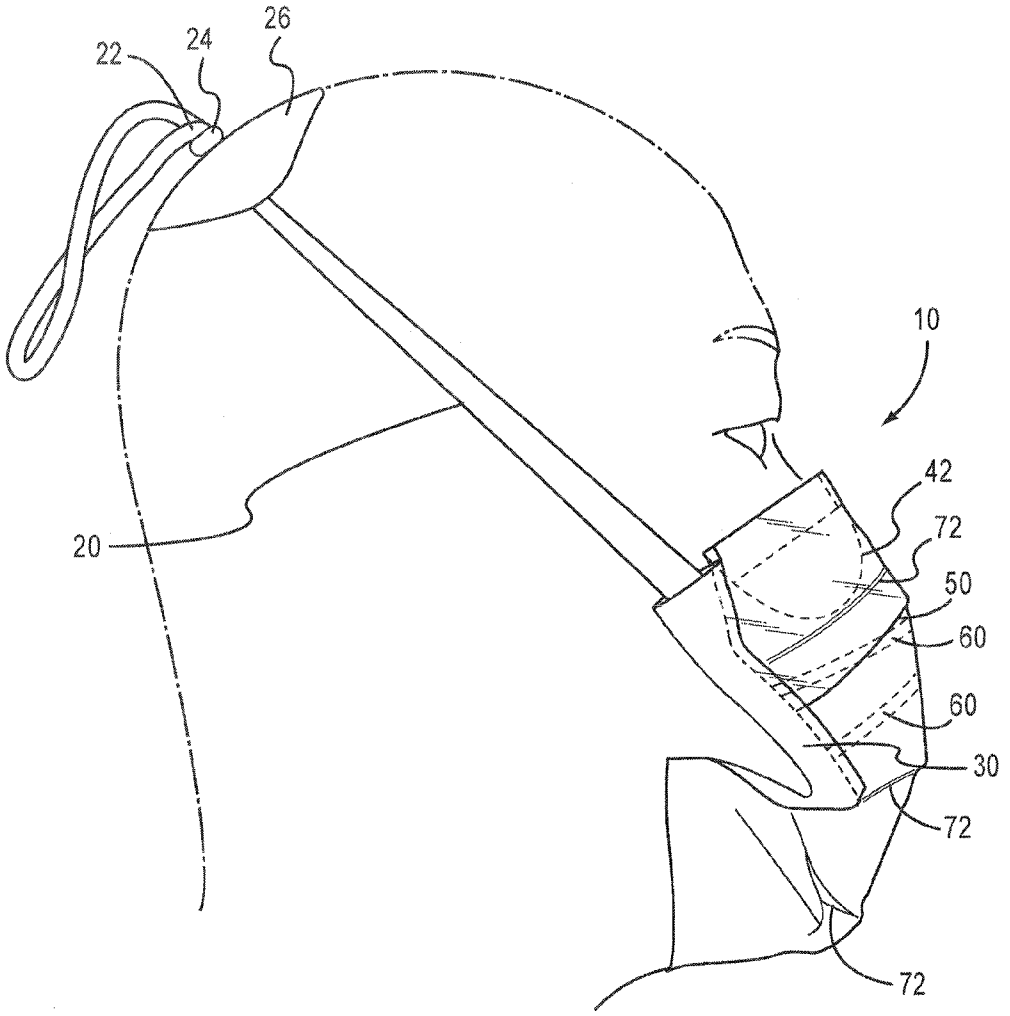

FIG. 12

SURGICAL MASK

RELATED APPLICATIONS

[0001] This application claims the benefit of U.S. Provisional Patent Application No. 61/332,536 titled "Surgical Mask" filed May 7, 2010. The related application is incorporated herein by reference in its entirety.

FIELD OF THE INVENTION

[0002] The invention relates to a surgical mask that provides a wide range of wearers with a good fit and comfort, while facilitating proper use of the mask and reducing fogging of the wearer's eyewear.

BACKGROUND OF THE INVENTION

[0003] Medical professionals wear surgical masks to prevent contamination of a patient's surgical or wound site with the wearer's nasal and oral bacteria that may result from the wearer talking, sneezing, or coughing during a medical procedure, such as surgery. Surgical masks also protect the wearer's mouth, nose and mucosa from contacting splashes or sprays of the patient's blood or other body fluids and from airborne microorganisms.

[0004] Typical masks include a body that covers the nose and mouth of the wearer and two sets of ties that are attached to the body that the wearer must tie behind his/her head to secure the mask to his/her face. Having two sets of ties provides the masks with some adjustability as the wearer may position the ties to suit his/her comfort and preference. Usually, one set of ties is attached to the upper part of the body of the mask and is secured around the upper part of a wearer's head, and the other set of ties is attached to the lower part of the body of the mask and is secured around the lower part of a wearer's head.

[0005] The presence of two sets of ties for securing the mask presents the opportunity for improper use, however, which often results from the wearer's desire to increase his/her comfort while wearing the mask. For example, a wearer may secure only the upper part of the mask to the upper part of his/her head using one set of ties, while allowing the lower part of the mask and the corresponding ties to hang freely around the neck. Consequently, the bottom of the wearer's nose and mouth may be exposed to microorganisms from the patient's surgical or wound site. A wearer may alternatively secure the set of ties corresponding to the lower part of the mask and loosen the set of ties corresponding to the upper part of the mask, allowing the mask to hang at his/her neck, to increase his/her comfort during a break in a medical procedure. The wearer may then fail to secure the ties corresponding to the upper part of the mask when he/she is back in close proximity with a patient. As a result, the wearer's nose and mouth may be exposed to the patient's surgical or wound site. These practices are violations of protocol and may cause the loose set of ties and the mask to become an obstruction between the wearer and the patient, possibly hindering the performance of the medical procedure.

[0006] Masks with two sets of ties also provide a wearer the opportunity to reuse a mask, since the wearer is able to remove one set of ties while partially maintaining the mask on his/her head using the other set of ties. The wearer may later re-tie the other set of ties, as the need arises. This practice is especially problematic when the wearer encounters a different patient, as he/she may re-secure a partially attached and previously-used mask that has possibly been contaminated, instead of removing and discarding the previously-used mask, as protocol dictates. Another problem with having two sets of ties is that since the two sets of ties are secured to a wearer's head independently of each other, improper tying and placement of either set of ties may compromise the overall protection offered by the mask.

[0007] In addition to surgical masks, wearers often wear eyewear, such as glasses or protective goggles, while performing medical procedures. A common disadvantage of typical masks is that a wearer's eyewear may fog when vapor from the wearer's exhaled breath escapes from or through the upper part of the mask and rises into his/her eyewear. This problem is exacerbated when there is a large gap between the upper part of the mask and the wearer's face or when the wearer's breath goes through the upper part of the mask. To prevent fogging and to reduce heat build-up in a typical mask, wearers often fail to secure the set of ties corresponding to the lower part of the mask so that vapor can escape through the bottom of the mask, which is a violation of protocol, as discussed above.

[0008] Another problem with typical masks is that they fit too loosely or tightly on a wearer's face, causing the wearer discomfort. Some masks are so loosely fitted that they migrate during head movements or common facial movements associated with talking. This requires the wearer to adjust the mask, which is difficult and distracting during a medical procedure. Moreover, contacting a mask with a gloved hand during a medical procedure is a violation of protocol as the mask is not considered to be "sterile" and it may contaminate the sterile glove. Migration of the mask may be so significant that the mask partially blocks the eye region, potentially leading to a decreased field of vision and exposure of the wearer's nose and mouth. Some masks, such as respirator-type masks, fit very tightly against a wearer's face to reduce the chance of exposing the wearer to the patient's bacteria or exposing the patient to a wearer's nasal and oral bacteria. They do not, however, conform to the contours of the wearer's face, which causes the wearer discomfort.

[0009] The problems of improper use, fogging of a wearer's eyewear, and insufficient wearer comfort associated with a typical mask discussed above stem from an unsatisfactory fit of the mask against the wearer's face. In an effort to alleviate these concerns, hospitals and other medical care facilities must carry multiples shapes and sizes of surgical masks to fit the dimensions and to suit the preferences of all wearers. Typical masks range from those with flat parts that cover the nose and mouth of the wearer to those of highly contoured cone and "duckbill" styles, which must be made available in many styles to fit a wide range of wearers.

[0010] Thus, there is a need to develop a mask that solves the disadvantages of improper use, fogging of eyewear, and insufficient wearer comfort of a typical mask, while providing a wide range of wearers with a good fit.

SUMMARY OF THE INVENTION

[0011] The invention relates to a surgical mask that provides a wearer with improved comfort, facilitates proper use of the mask, and reduces or eliminates fogging of eyewear, as compared with typical masks. The mask also provides a wide range of wearers with a good fit.

[0012] The mask may include a single pair of ties, or alternatively a single strap, that is attached to the upper, central, and lower parts of either side of the body of the mask in

conjunction with one or more pairs of flexible restraint members. The restraint members are attached to or integral with the body of the mask at or adjacent to the sides of the body of the mask. The ties and restraint members may orient the upper, central, and lower parts of the mask to the corresponding portions of a wearer's face. The ties and restraint members allow the mask to be donned easily and assist a wearer in complying with protocol. Further, this configuration reduces the potential for reuse of a mask. The location of the ties and restraint members also allow the mask to fit wearers of a wide range of shapes and sizes.

[0013] In some embodiments, the mask may include a sealing member that is attached to or is integral with the upper part of the mask so as to be in contact with the wearer's nose and cheeks in use. This sealing member reduces or eliminates any gaps between the wearer's face and the upper part of the mask by forming a seal between the wearer's face and the mask. Preferably, the sealing member, alone or in conjunction with the upper part of the mask, forms at least one pocket that exhibits low vapor transmission or, more preferably, vapor impermeability, from the wearer's face through the upper part of the mask. This configuration reduces or eliminates vapor from the wearer's exhaled breath from escaping from the upper part of the mask and fogging the wearer's eyewear. The sealing member is preferably soft and flexible to provide comfort and adjustability to the wearer.

[0014] In some embodiments, the mask may include one or more barrier panels that are joined to or integral with the mask. The one or more barrier panels form a barrier that reduces or eliminates the wearer's breath from escaping through the body of the mask and rising and fogging the wearer's eyewear. For example, if the one or more barrier panels are positioned at the upper part of the body of the mask, the one or more barrier panels preferably direct the wearer's breath toward the central and lower parts of the mask so that it may escape through the body of the mask and/or out from the sides.

[0015] The mask of the invention may include any combination of these and other features, as discussed below.

DECSRIPTION OF THE DRAWINGS

[0016] FIG. **1** is a front view of a mask according to one embodiment of the invention.

[0017] FIG. **2** is a front view of a mask according to another embodiment of the invention.

[0018] FIG. **3** is an expanded view of a mask according to one embodiment of the invention.

[0019] FIG. **4** is an expanded view of a mask according to another embodiment of the invention.

[0020] FIG. **5** is a front view of a mask according to another embodiment of the invention.

[0021] FIG. **6***a* is a back view of a sealing member having a fold, according to one embodiment of the invention.

[0022] FIG. **6***b* is a back view of a sealing member showing a pocket created by a fold, according to one embodiment of the invention.

[0023] FIG. **7** is a front view of a mask of the invention donned by a wearer.

[0024] FIG. **8** is side view of a mask according to one embodiment of the invention donned by a wearer.

[0025] FIG. **9** is side view of a mask according to another embodiment of the invention donned by a wearer.

[0026] FIG. **10** is a front view of a mask according to one embodiment of the invention having a strap and a cinching attachment.

[0027] FIG. **11** is a front view of a mask according to another embodiment of the invention having a strap and a cinching attachment.

[0028] FIG. **12** is a side view of a mask having a cap according to an embodiment of the invention donned by a wearer.

DETAILED DESCRIPTION OF THE INVENTION

[0029] The surgical mask of the invention overcomes the disadvantages of typical masks discussed above. In particular, the mask of the invention provides a wearer with improved comfort, facilitates its proper use, and reduces or eliminates fogging of eyewear, as compared with typical masks. The mask also provides a wide range of wearers with an improved fit.

[0030] Various aspects of the mask may be illustrated by describing components that are attached and/or joined together. As used herein, the term "attached" is used to indicate either a direct connection between two components or, where appropriate, an indirect connection to one another through intervening or intermediate components. In contrast, when a component is referred to as being "joined" to another component, there are no intervening or intermediate components present.

[0031] The mask may include ties that are integral with the mask or may be attached to the mask either directly or indirectly. The mask may include a pair of ties, or alternatively a single strap, that are attached to the body of the mask at or adjacent to the sides of the body of the mask. For example, the ties may be attached to the lower edge of the mask in a parallel or perpendicular alignment with the lower edge of the mask. Preferably, the ties are attached parallel to the lower edge of the mask so as to provide the mask with a better fit against the lower part of a wearer's face in use.

[0032] In one embodiment of the invention as shown in FIGS. **1** and **3**, the ties **20** may be joined directly to the lower part of either side of the body of the mask **70**. However, it is also possible to join the ties to the central or upper part of the body of the mask, or to join the ties to the restraint members, as discussed below.

[0033] The ties may secure the upper, central, and lower parts of the mask to the corresponding portions of a wearer's face as the wearer dons the mask and pulls the ties behind his/her head. The ties may be attached to the upper, central, and lower parts of either side of the body of the mask in conjunction with one or more pairs of flexible restraint members that are attached to or integral with the body of the mask.

[0034] The restraint members may be positioned at or adjacent to the sides of the body of the mask. The restraint members may be positioned parallel to, perpendicularly to, or at an angle from the sides of the body of the mask. The restraint members may take a variety of shapes and configurations including, but not limited to, sleeve, loop, rectangular, triangular, tapered, and curved shapes.

[0035] The ties may be attached to the restraint members in many ways. For example, the ties may be passed through, aligned with, or joined to the restraint members by any possible method including, but not limited to, ultrasonic welding, heat welding, adhesive bonding, or by stitching.

[0036] In the embodiment shown in FIGS. **1**, **3**, **8**, **10**, and **12**, the ties are attached by passing through flexible restraint

members **30** formed as sleeves along the sides of the body **70** of the mask. The restraint members **30** may or may not extend all the way to the lower edge of the mask. Preferably, the restraint members **30** extend along the sides of the body **70** of the mask and end above the lower edge of the mask. The lower edge of the mask is preferably configured to be positioned under the wearer's chin. Alternatively, the restraint members **30** may extend all the way to the lower edge of the mask.

[0037] In another embodiment shown in FIGS. **2**, **4**, **9**, and **11** the ties are attached by passing through flexible restraint members **80** and **82** formed as loops in the upper and central parts of the body **70** of the mask, respectively.

[0038] In some embodiments, more than two pairs of restraint members may be positioned at or adjacent to the sides of the body of the mask. In an embodiment shown in FIG. **5**, pairs of restraint members **92** are attached to the upper, central, and lower parts of either side of the body of the mask and are joined together with ties **94** at a position distant from the body of the mask. These restraint members **92** may be formed integrally with each other, or one or more of the restrained members **92** may be formed integrally with the ties **94**.

[0039] When the wearer secures or pulls the ties around his/her head while donning the mask, the restraint members conform toward the wearer's cheeks to orient and/or restrain the ties and to cinch the sides of the mask to the wearer's face. Preferably, the restraint members are configured to orient or cinch both sides of the lower, central, and upper parts of the body of the mask toward, and optionally in contact with, the wearer's face. As the body of the mask cinches, the body of the mask forms a chamber that covers at least the wearer's mouth and lower nose. The chamber has a generally contoured shape, but its shape varies based on how tightly the wearer secures the ties behind his or her head.

[0040] A wearer may optionally secure the ties while utilizing some, but not all, of the restraint members. Thus, the wearer may achieve a better fit of the mask against his/her face and provide greater comfort.

[0041] The ties may be made of flexible materials including, but not limited to, polyolefins, polyolefin alloys, and polyolefin elastomers. The materials may include fibers such as spunbond fibers and bi-component fibers in a core and sheath configuration such as a polyethylene sheath/polypropylene core.

[0042] The restraint members may be made of elastic materials that stretch towards the sides of the wearer's face so as to provide the mask with greater comfort and a better fit against the wearer's face in use. For example, when the restraint members are in a sleeve configuration, the sleeves are preferably made of an elastic material that stretches in one direction. The sleeve restraint members may be oriented at the sides of the mask so as to stretch in a direction perpendicular to the sides of the mask. The elastic material may include, but is not limited to, nonwovens, such as SMS with an elastic polyolefin, a spunbond made with elastic polyolefin, or knitted polyolefins or other polymers with elastic components.

[0043] The restraint members may also be made of flexible materials including, but not limited to, polyolefins, polyolefin elastomers, polyolefin alloys, and polyolefins or polyester with spandex. The materials may include fibers such as spunbond fibers, bi-component fibers in a core and sheath configuration such as a polyethylene sheath/polypropylene core, knitted polyester and knitted polyolefins.

[0044] The presence of polyolefins such as polyethylene in the ties and restraint members is preferred because it makes them softer and more comfortable to a wearer. However, any desired soft material may be used. The presence of elastomeric materials in the ties and restraint members is preferred because it allows the mask to stretch and conform to the wearer's face, particular during facial movements and while talking, thus providing a better fit and greater comfort to the wearer.

[0045] The ties and/or restraint members may be integral with the body of the mask or they may be joined to the body of the mask by any possible method including, but not limited to, stitching, heat welding, ultrasonic welding, and adhesive bonding.

[0046] In another embodiment of the invention, the ties may form earloops that are used with the restraint members, as discussed above. In yet another embodiment shown in FIGS. **10** and **11**, a single strap **22** may be used instead of a pair of ties. The strap may be a single continuous piece, for example, that is integral with or attached to the body of the mask. For example, each end of the strap **22** may be joined to the lower part of either side of the body of the mask **70**, as shown in FIGS. **10** and **11**. Alternatively, it is possible to join the strap to the central or upper part of the body of the mask, or to join the strap to the restraint members, as discussed above. The strap may be made of the same materials as the ties.

[0047] The strap may be used with a cinching attachment that secures the strap to the wearer's head as the wearer pulls the strap towards his/her head. The cinching attachment may be attached to the strap so that the strap can be cinched to tighten behind the wearer's head. The cinching attachment preferably secures both sides of the strap so that the strap does not slip and loosen the mask from the wearer's head. For example, a cinching attachment **24** may be positioned near the middle of the strap **22**, as shown in FIGS. **10** and **11**.

[0048] The cinching attachment may include, but is not limited to, a button spring clip.

[0049] The strap and cinching attachment may be used with a cap that lies against the wearer's head to provide added comfort. As shown in FIG. **12**, when a cap **26** lies against the wearer's head, a cinching attachment **24** may be used to secure a cinched strap **22** to the wearer's head. The cap may have any desirable configuration including, but not limited to, circular, oval, square, triangular, etc. The cap may be made from materials including, but not limited to, polyethylene, polypropylene, cardboard, and polyester.

[0050] The restraint members and ties or strap enable the mask to remain secured to a desired location on the wearer's face and allow only minimal movement of the mask as the wearer talks or makes facial movements. The restraint members in combination with the ties or strap also provide a good fit and adjustability of the mask against both sides of a wearer's face.

[0051] The wearer may secure the ties or strap around the crown, back, or lower part of his/her head, depending on his/her personal preference, providing adjustability and comfort. The adjustability of the ties or strap and restraint members allow the mask to conform to fit wearers having faces with a wide range of shapes and sizes. The mask also accommodates a wide variety of hairstyles, including ponytails, or when the hair is covered in a protective wrap, such as a surgeon's cap or bouffant.

[0052] The wearer may secure the ties or strap together behind his/her head as tightly or as loosely as he/she desires, while still covering his/her nose and mouth. The ties or strap and restraint members allow the body of mask to fit snugly against the wearer's face. If desired, an almost "respirator-type" seal may be formed between the mask and wearer's face, while providing greater comfort than a typical respirator or mask. A wearer may optionally leave gaps between the central part of the mask and his/her face to provide greater comfort.

[0053] Further, this configuration of ties or strap and restraint members allows a wearer to don the mask easily and assists a wearer in complying with protocol. In addition, the configuration of the ties or strap of the invention reduces the potential for improper reuse of a mask.

[0054] In some embodiments of the invention, the mask includes a sealing member. The sealing member may be attached to or be integral with the upper part of the body of the mask on the inner surface that faces the wearer's nose and cheeks in use. The sealing member reduces or eliminates gaps that may be present between the wearer's nose and cheeks and the upper part of the mask, thereby reducing or eliminating fogging of eyewear. In particular, the sealing member conforms to a wearer's face to provide a seal between the mask and nose and cheeks.

[0055] The sealing member preferably forms at least one pocket between the mask and the wearer's face. The at least one pocket may be formed by the sealing member alone, or in conjunction with the inner surface of the upper part of the mask. A pocket may be configured to reduce or prevent the wearer's breath from escaping from gaps between the wearer's nose and cheeks and the upper part of the mask by closing the gaps and channeling the breath away from the gaps. For example, a pocket may channel a wearer's breath so that it may escape through any gaps between the central part of the mask and the wearer's face.

[0056] FIGS. **1-5** shown one sealing member **40**, but more than one sealing member may be used. The sealing member may have a uniformly wide shape, such as rectangular. Alternatively, a sealing member **40** may be narrower at a center section **46** corresponding to the bridge of the nose and/or at right and left side sections **48**, as shown in FIGS. **1-5**. Having a narrower center section **46** at the nose assists in maintaining the mask in position and may reduce or eliminate migration of the mask into the field of vision and upsetting the placement of eyewear. Preferably, as shown in FIGS. **1-6**, the sealing member includes two semi-arcuate regions between the center section and the side sections.

[0057] The sealing member may be made of any material that is flexible so that it can conform to the contours of a wearer's face. Preferably, the sealing member may be made of a flexible soft material. Even more preferably, the sealing member may be made of a flexible soft material that exhibits low water absorption and vapor transmission, such as an air permeability of 10 cubic feet/min or less as measured by the WSP 70.1 standard or is vapor impermeable, such as a foam. A sealing member made of foam may provide comfort and adjustability to the wearer. For example, the foam may be made of a closed-cell polyethylene EVA copolymer foam that is crosslinked using an electron irradiation process, such as the foam sold under the trade name Volara Type G®.

[0058] The sealing member may be integral with the upper part of the body of the mask, or it may be attached to the upper part of the body of the mask, preferably on the inner surface thereof. The sealing member may be joined to the body of the mask by any possible method including, but not limited to, stitching, heat welding, ultrasonic welding, and adhesive bonding.

[0059] According to a preferred embodiment of the invention, the sealing member may be folded and attached to the upper part of the mask. In this embodiment, an attachment section of the sealing member is attached to the body of the mask across its width and a folded over section folds over the attachment section. The folded over section may be about 0.5 to about 4 times the width of the attachment section at its widest point. When the mask is donned, the folded over section contacts the wearer's nose and cheeks. The attachment section and the folded over section thus form an integral pocket at the upper part of the mask. This embodiment is preferred over an embodiment without the attachment section, although the attachment section is not necessary, as a pocket may also form between the sealing member and the inner surface of the upper part of the mask.

[0060] FIGS. **6***a* and **6***b* show an embodiment of the sealing member **40** having a folded over section **42** and an attachment section **44**. In this embodiment, two pockets may be formed between the folded over section **42** and the attachment section **44**.

[0061] In an embodiment of the invention, the folded over section and the attachment section may be sealed together at the center section and/or at the side sections. The seal at the center section and the side sections may be achieved by any possible method including, but not limited to, heat welding and ultrasonic welding. At least a seal at the center section is preferred, since such a seal results in two pockets on either side of the center section, which further improves vapor trapping.

[0062] In some embodiments of the invention, the mask includes one or more barrier panels that are attached to or are integral with the mask. The barrier panel forms a barrier that reduces or prevents vapor from the wearer's breath from passing through the body of the mask and rising to and fogging the wearer's eyewear. Preferably, the barrier panel directs the wearer's breath toward the sides of the body of the mask or toward other portions of the body of the mask where the barrier material is not present, so that the breath can preferably escape out from the sides of the central part of the mask or through the other portions of the body of the mask.

[0063] The barrier panel may be positioned at any part of the body of the mask. Preferably, the barrier panel is positioned at the central and/or upper part of the body of the mask, on an outer surface opposite the surface that contacts the wearer's face. If the one or more barrier panels are positioned at the upper part of the body of the mask, the one or more barrier panels preferably direct the wearer's breath toward the central and lower parts of the mask so that it may escape through the body of the mask and/or out from the sides. The barrier panel may also be positioned in between any layers that make up the body of the mask, or adjacent to additional components of the mask, such as the sealing member, on the inner surface.

[0064] The barrier panel may be positioned at the body of the mask across its entire width, or it may be positioned at discrete locations. For example, the barrier panel may be placed in the central part of the body of the mask to direct the flow of vapor to the sides of the body of the mask.

[0065] A barrier panel **50** may have a rectangular shape as shown in FIGS. **1-5**, or its width may be varied. For example, the barrier panel may have an arcuate or semi-arcuate shape.

[0066] The barrier panel may be made of any material that exhibits low vapor transmission, such as an air permeability of 10 cubic feet/min or less as measured by the WSP 70.1 standard or is vapor impermeable including, but not limited to, polyolefins such as polyethylene and polypropylene. The barrier panel may be transparent, opaque, colored, or printed.

[0067] The barrier panel may be attached to the body of the mask by any possible method including, but not limited to, stitching, heat welding, ultrasonic welding, and adhesive bonding.

[0068] In some embodiments, the mask may include one or more stiffening members that are positioned on or within the body of the mask. The stiffening members provide rigidity to the body of the mask to reduce or prevent the collapse of the mask into the wearer's face as the wearer inhales. For example, the body of the mask may include two stiffening members **60**, as shown in FIGS. **1-5**, that correspond to where a wearer's nostrils and mouth would be positioned, as shown in FIGS. **7-9**.

[0069] The stiffening members may be formed, for example, by heat or ultrasonically welding the material(s) forming the body of the mask. The stiffening members may also be formed by placing a strip of material on top of or between the layers of the body of the mask to provide rigidity. Alternatively, the stiffening members may be formed by placing strips of a polymeric adhesive on the body of the mask or between its layers at various locations along its width.

[0070] If the stiffening members are formed from a strip of material, the material may include, but is not limited to, polyolefins such as polypropylene and polyethylene, cardboard, paper, polyethylene terephthalate, or any semi-stiff polymer. The stiffening members may be joined to the body of the mask by any possible method including, but not limited to, heat welding, ultrasonic welding, and adhesive bonding. The stiffening members may also be formed by applying an acrylic or hot melt adhesive on top of or between the layers of the body of the mask.

[0071] The stiffening members may have a variety of shapes, sizes, and configurations that provide the body of the mask with sufficient rigidity to withstand collapse of the mask with the wearer's inhaled breath. For example, the stiffening members may be straight, curved, angled, continuous, or discontinuous. Preferably, the stiffening members have a generally rectangular shape, as shown in FIG. **1**.

[0072] In addition, the stiffening members may be positioned horizontally, vertically, or at an angle on the body of the mask. Preferably, the stiffening members are positioned horizontally on the body of the mask, as shown in FIGS. **1** and **3**.

[0073] The rigidity of the body of the mask provided by the stiffening members may be varied by altering their width, length, and thickness and by varying the type and amount of material or adhesive used.

[0074] In some embodiments, the mask may include one or more deformable members. The deformable member may be bent or pressed by a wearer into a configuration that allows the body of the mask to conform to a wearer's face. In particular, the deformable member may assist in forming the seal between the sealing member and the wearer's face as it can maintain the sealing member in a desired configuration corresponding to the contours of the wearer's face. For example, the deformable member may be positioned at the upper part of the body of the mask corresponding to where a wearer's nose and cheeks would be positioned in use.

[0075] The deformable member may be positioned on a surface of the body of the mask, within layers of the body of the mask, or between the body of the mask and the sealing member. For example, as shown in FIG. **3**, a deformable member **100** may be positioned between the upper part of the body of the mask and the barrier panel **50**.

[0076] The deformable member may be made of any deformable material that retains its shape after being bent or pressed by a wearer, such as a metal. Possible metals that may be used in the deformable member include, but are not limited to, aluminum, such as Aluminum 1350, and steel. The deformable member may also comprise two or more wires, such as thin steel wires, each preferably having a diameter of 1/16 inch or less, embedded in a polypropylene film strip.

[0077] The deformable member may have a variety of shapes, sizes, and configurations that allow a wearer to bend or press it to conform the body of the mask to a wearer's face. For example, the deformable member may be straight, curved, angled, continuous, or discontinuous. In an embodiment of the invention, as shown in FIG. **3**, the mask includes a deformable member **100** that has a continuous rectangular shape. Alternatively, the deformable member may have an arcuate shape.

[0078] The deformable member may be attached to the body of the mask by any possible method including, but not limited to, heat welding, ultrasonic welding, and adhesive bonding. For example, heat welding and ultrasonic welding may be used to encapsulate a deformable member within the layers that form the body of the mask. Alternatively, an adhesive may be applied to a deformable member to attach it to the body of the mask.

[0079] The body of the mask may be made of any material that substantially covers the mouth and nose of a wearer. The material forming the body of the mask may have a variety of shapes and configurations that allow it to conform to the wearer's face, such as a generally rectangular shape, a contoured shape, or a combination of shapes. For example, the central part of the lower part of the body of the mask may have one or more curves to allow a better fit against a wearer's chin. Generally, it is preferred that the lower part of the body of the mask is straight so that the mask may be folded flat.

[0080] In an embodiment of the invention, the body of the mask includes pleats **72**, as shown in FIGS. **1** and **3**. The pleats **72** expand when mask **10** is donned by a wearer, as shown in FIGS. **7** and **8** and they preferably fold flat so that the mask **10** can lay flat for easy packaging and storage.

[0081] The pleats may be formed by folding the material and joining the sides of the body of the mask by any available method including, but not limited to, stitching, ultrasonic welding, heat welding, etc. to hold the pleats in place.

[0082] The body of mask may be made of any suitable material that allows a wearer to breathe through it including, but not limited to, nonwoven materials such as wet laid, dry laid, spunlaced, spunbond, meltblown, spunbonded-melt blown-spunbonded (SMS), carded, thermoplastic fibers, regenerated fibers, and bicomponent fibers such as sheath-core fibers. These nonwovens may be made of materials including, but not limited to, polyolefins such as polyethylene and polypropylene, polyesters such as PET, natural fibers, and cellulose materials. The nonwovens forming the body of mask may comprise mixtures of two or more of the foregoing fiber types.

[0083] Further, the body of the mask may include one or more layers of such materials. For example, the body of the mask may be made of four layers including an outer layer of spunbond/spunbond polypropylene, an intermediate layer of calendered bi-component polyethylene/PET, a middle filtration layer of meltblown electret-treated polypropylene, and an inner layer of wet laid cellulose. The body of the mask may also be made of three layers including an outer layer of spunbond/spunbond polypropylene, a middle filtration layer of meltblown electret-treated polypropylene, and an inner layer of spunbond/spunbond polypropylene, for example.

[0084] Binding material may optionally be attached to the body of the mask to attach the various components of the mask and/or to provide the mask with smooth edges. For example, binding material may be positioned between the deformable member and the barrier panel to attach the deformable member to the upper part of the mask. In addition, binding material may be attached to the lower part and sides of the mask. When attached to the sides of the mask, the binding material may be used to hold any pleats in the body of the mask in place.

[0085] Binding material may also be attached to or formed integrally with the ties. For example, when binding material is attached to the lower part of the mask, ties may be formed by extending the binding material to form ties. Alternatively, the ties may be attached to the binding material at the upper part, lower part, and/or sides of the mask.

[0086] The binding material may be attached to the mask by any available method including, but not limited to, stitching, ultrasonic welding, heat welding, etc. The binding material may be made of any suitable material that may be joined to the body of the mask including, but not limited to, nonwoven materials such as wet laid, dry laid, spunlaced, spunbond, meltbiown, spunbonded-melt blown-spunbonded (SMS), carded, thermoplastic fibers, regenerated fibers, and bicomponent fibers in a core and sheath configuration such as a polyethylene sheath/polypropylene core, and knitted materials. These nonwovens may be made of materials including, but not limited to, polyolefins such as polyethylene and polypropylene, polyolefin elastomers, polyolefin alloys, polyesters such as PET, natural fibers, and cellulose materials.

[0087] To adequately protect both the wearer and patient from fluid transfer, the body of the mask may provide some level of fluid resistance. Typically, when the body of the mask includes a higher number of layers, it provides a higher fluid resistance. For example, the body of the mask may provide a fluid resistance of at least 160 mm Hg according to the ASTM F1862 Fluid Resistance to Synthetic Blood standard. The body of the mask also preferably meets the requirements of High Barrier according to ASTM F2100 standard.

[0088] Each layer of the body of the mask may have a basis weight of from about 0.25 oz/sq. yd., to about 4.0 oz/sq. yd. For example, the total weight of all layers of the body of the mask may be about 2.4 oz/sq. yd.

[0089] The mask of the invention may include any combination of the features discussed above.

[0090] Experimental 1

[0091] The ability of the mask of the invention to prevent fogging of a wearer's eyewear and to restrict movement on a wearer's face as compared to three other masks that are commonly used by medical professionals was tested on a group of thirty random participants. The mask tested was similar to the embodiment shown in FIGS. **1** and **3**, which includes sleeves as reinforcement members, and one set of ties. The mask also included a sealing member with two pockets similar to that shown in FIGS. **6***a* and **6***b*.

[0092] The commonly-used masks tested were the Cardinal Health Secure-Gard® Fluid Resistant Surgical Mask with Fog-Free Strip mask (Ref. AT74535), the Kimberly-Clark TECNOL® FLUIDSHIELD® Fog-Free Surgical Mask (Ref. 48207), and the 3M High Fluid Resistant Surgical Mask (Ref. 1835). Any markings on the masks, such as manufacturer names, that may allow a participant to identify one of the tested masks were covered by the moderators prior to testing.

[0093] All four of the masks tested had pleats in the body of the mask and deformable members positioned at the upper part of the mask corresponding to where a wearer's nose and cheeks would be positioned in use. The Cardinal Health Secure-Gard® mask and the Kimberly-Clark TECNOL® FLUIDSHIELD® mask included flat rectangular pieces of foam attached to the upper part of the mask on the inner surface that faces the wearer's nose and cheeks in use, while the 3M High Fluid Resistant Surgical Mask did not.

[0094] The Cardinal Health Secure-Gard® mask, the Kimberly-Clark TECNOL® FLUIDSHIELD® mask, and the 3M High Fluid Resistant Surgical Mask did not include a sealing member with pockets, a barrier panel, or stiffening members in the body of the mask, as did the mask of the invention. In addition, the Cardinal Health Secure-Gard® mask, the Kimberly-Clark TECNOL® FLUIDSHIELD® mask, and the 3M High Fluid Resistant Surgical Mask each included two sets of ties. One set of ties was attached to the upper part of the body of the mask to be secured around the upper part of a wearer's head, and the other set of ties was attached to the lower part of the body of the mask and to be secured around the lower part of a wearer's head.

[0095] The moderators measured the participants' facial length and width at the beginning of the testing using sliding and spreading calipers. These measurements were recorded and each participant was assigned a bivariate cell number based on the 25-Member NIOSH Panel shown below.

25-Member Panel

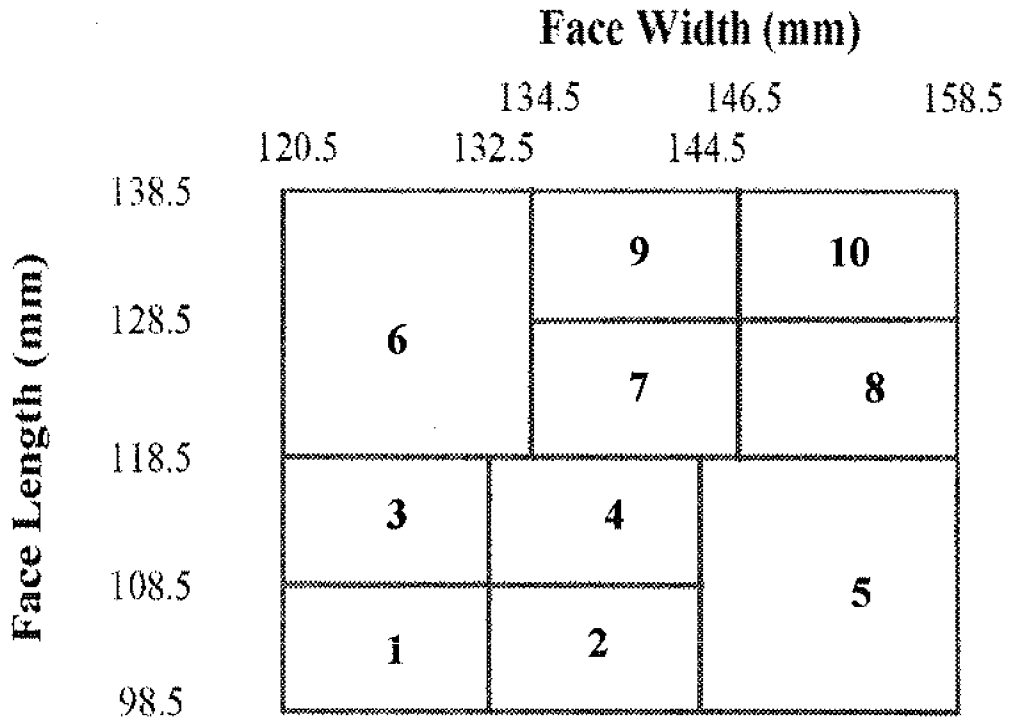

[0096] The moderators asked each participant to don a bouffant cap or surgeons cap. The moderators then asked the participant to randomly select one of the four masks and to don the mask, using a mirror to assess appropriate mask placement. The moderators asked the participants to make any necessary adjustments to ensure a proper fit. The moderators asked each participant to look in the mirror and take note of the position of the mask on the face. The moderators asked each participant to pay attention to the position of the mask on the nose, the distance from the eyes, and the location of the ties. The moderators informed the participants that once the testing was underway, he/she may not touch the mask or adjust its position on their face. If a participant was not wearing glasses, the moderators asked him/her to don protective eyewear over the mask.

[0097] Various exercises were performed to test the anti-fogging and movement of each mask on the participants' faces. The participants' answers of "yes" or "no" regarding whether any fogging occurred after each exercise were recorded by the moderators. The moderators instructed each participant to remain still and continue breathing normally. The moderators gave each participant a word search puzzle and a pen, and ask him/her to complete the puzzle. After one minute, the moderators asked each participant whether they observed any fogging of the eyewear, and if so, if the fogging was impairing his/her ability to perform the task of completing the puzzle. The moderators then instructed each participant to continue working on the word search puzzle and begin taking slow, deep breaths. After one minute, the moderators asked each participant whether they observed any fogging of the eyewear, and if so, if the fogging was impairing his/her ability to perform the task of completing the puzzle.

[0098] The moderators instructed each participant to stop working on the word search puzzle, remain seated, and slowly turn his or her head from side to side as far as possible while breathing normally. After one minute, the moderators asked each participant whether they observed any fogging of the eyewear. The moderators instructed each participant to remain seated and slowly move his or her head up and down, alternating between looking at the ceiling and the floor. After one minute, the moderators asked each participant whether they observed any fogging of the eyewear.

[0099] The moderators instructed each participant to read out loud a passage of text, which was provided by the moderators, making sure that the participant spoke slowly and loudly enough to be heard by the moderators. After one minute, the moderators asked each participant whether they observed any fogging of the eyewear, and if so, whether the fogging impaired his/her ability to perform the task of reading the passage. The moderators instructed each participant to make an expression such as smiling or frowning. After thirty seconds, the moderators asked each participant whether they observed any fogging of the eyewear. The moderators instructed each participant to resume work on the word search puzzle, remain still, and continue breathing normally. After one minute, the moderators asked each participant whether they observed any fogging of the eyewear, and if so, if the fogging was impairing his/her ability to perform the task of completing the puzzle.

[0100] The moderators then asked each participant to look in the mirror and assess the position of the mask on his/her face. The moderators asked each participant whether the mask moved on his/her face during the exercises. In particular, the moderators asked each participant whether the mask contacted their lips during the exercises as a result of the mask collapsing inward towards his/her face. A rating of 0 signified no lip contact, a rating of 1 signified occasional lip contact, and a rating of 2 signified that lip contact was maintained during the exercises.

[0101] The moderators then asked each participant to remove the eyewear and the surgical mask. The moderators then asked each participant to select one of the remaining masks and to don the mask, using a mirror to assess appropriate mask placement. The steps discussed above were repeated for all four masks.

[0102] The participants' responses regarding the fogging and movement of each mask are summarized below in Table 1. The mask of the invention is denoted as "A", the Cardinal Health Secure-Gard® mask is denoted as "B", the Kimberly-Clark TECNOL® FLUIDSHIELD® mask is denoted as "C", and the 3M High Fluid Resistant Surgical Mask is denoted as "D". Each participant's response for whether fogging occurred after each exercise for each mask was condensed into one "yes" or "no" answer for each mask. If fogging was reported during any one or more of the seven exercises for a particular mask, the condensed response for that mask was reported as "yes". If fogging was not reported during any of the exercises, the condensed response for that mask was reported as "no".

TABLE 1

Test Subject	Size bivariate cell number	Fog A?	Fog B?	Fog C?	Fog D?	Movement A?	Movement B?	Movement C?	Movement D?
1	4	Yes	Yes	Yes	Yes	0	2	2	0
2	2	No	No	No	Yes	2	0	1	1
3	4	Yes	No	Yes	Yes	0	0	0	0
4	7	Yes	Yes	Yes	Yes	0	0	0	1
5	7	No	Yes	Yes	Yes	0	0	0	0
6	2	Yes	Yes	Yes	Yes	0	0	0	0
7	2	No	Yes	Yes	Yes	0	1	1	1
8	8	Yes	Yes	Yes	Yes	0	0	0	0
9	8	Yes	Yes	Yes	Yes	0	0	0	0
10	4	Yes	Yes	Yes	Yes	1	0	1	0
11	7	No	Yes	Yes	Yes	0	0	0	0
12	1	Yes	No	Yes	Yes	0	1	0	0
13	8	Yes	Yes	Yes	Yes	0	1	2	0
14	1	No	Yes	Yes	Yes	1	1	1	1

TABLE 1-continued

Test Subject	Size bivariate cell number	Fog A?	Fog B?	Fog C?	Fog D?	Movement A?	Movement B?	Movement C?	Movement D?
15	4	Yes	Yes	Yes	Yes	0	0	0	0
16	10	Yes	Yes	Yes	Yes	0	1	0	1
17	1	Yes	Yes	Yes	Yes	2	1	0	2
18	3	No	Yes	Yes	Yes	0	0	0	0
20	8	No	Yes	Yes	Yes	0	0	1	0
20	4	Yes	No	Yes	Yes	0	1	1	1
21	4	Yes	Yes	No	No	0	1	0	0
22	2	No	No	No	No	0	2	0	0
23	2	Yes	Yes	Yes	Yes	1	0	0	0
24	1	No	Yes	Yes	Yes	0	0	1	1
25	7	No	Yes	Yes	Yes	0	0	0	0
26	3	No	No	No	Yes	0	0	0	0
27	2	Yes	Yes	Yes	Yes	0	2	0	0
28	7	No	No	No	Yes	0	1	1	1
29	7	No	No	No	Yes	0	0	2	1
30	4	No	No	No	Yes	0	1	2	0
% of participants with NO fogging		46.7%	30.0%	23.3%	6.7%				
% of participants with NO lip contact						83.3%	56.7%	60.0%	66.7%
% of participants with occasional lip contact						10.0%	33.3%	26.7%	30.0%
% of participants with maintained lip contact						6.7%	10.0%	13.3%	3.3%

[0103] As shown in Table 1, the participants found that the mask of the invention provided higher anti-fogging abilities as compared to the three commonly-used masks. In particular, 46.7% of the participants found that the mask of the invention exhibited no fogging, while the closest of the commonly-used masks, the Cardinal Health Secure-Gard® mask, exhibited no fogging for only 30.0% of the participants. The percentage of participants that experienced no fogging with the mask of the invention, 46.7%, represents a 55.6% improvement in anti-fogging abilities as compared to the Cardinal Health Secure-Gard® mask, a 100% improvement as compared to the Kimberly-Clark TECNOL® FLUIDSHIELD® mask, and a 600% improvement as compared to the 3M High Fluid Resistant Surgical Mask.

[0104] The data in Table 1 also demonstrates that the participants experienced less contact of the mask of the invention with their lips during the exercises as a result of the mask collapsing inward towards his/her face as compared to the three commonly-used masks. In particular, 83.3% of participants experienced no contact of the mask of the invention with their lips, while the closest of the commonly-used masks, the 3M High Fluid Resistant Surgical Mask, provided only 66.7% of the participants with no lip contact. The percentage of participants that experienced no lip contact with the mask of the invention, 83.3%, represents a 24.9% improvement as compared to the 3M High Fluid Resistant Surgical Mask, a 38.9% improvement as compared to the Kimberly-Clark TECNOL® FLUIDSHIELD® mask, and a 47% improvement as compared to the Cardinal Health Secure-Gard® mask. The mask of the invention also provided low occasional and maintained lip contact as compared to the other masks tested.

[0105] The participants in this test had a wide range of facial sizes, as indicated by the varied size bivariate cell numbers summarized in Table 1. The distribution of size bivariate cell numbers is summarized in Graph 1 below.

[0107] Graph 1

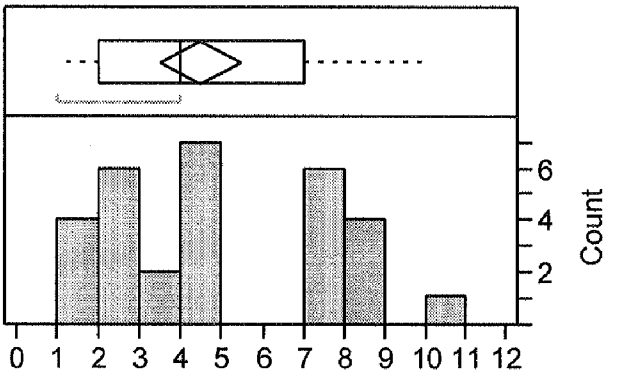

[0106] Experimental 2

[0107] The fit and comfort of a mask of the invention was tested on a group of 12 participants. The mask used was similar to the embodiment shown in FIGS. **2** and **4**, which includes loops as restraint members.

[0108] The moderators first asked the participants a series of questions about the type of mask they currently wear at work, whether they wear eyewear, and whether they experience any fogging of eyewear while wearing the current mask. If the participant experienced fogging of eyewear, the participant was asked how they typically reduce or prevent the fogging. These responses included, for example, moving the glasses and lifting the mask, and taping or adjusting the nose wire.

[0109] The moderators then measured the facial width, facial length, nose length, and nose protuberance, or how far the nose protrudes from the face, of each participant. The facial widths ranged from about 10.6 cm to about 15 cm, the facial lengths ranged from about 9.5 cm to about 13.9 cm, the nose lengths ranged from about 4.5 cm to about 5 cm, and the nose protuberances ranged from about 1.5 cm to about 2.6 cm.

[0110] The moderators administered a stroop color test, which is a logic puzzle, to get a baseline reading on the participant's ability to respond to the questions. Next, the moderators asked the participants to try on the mask. The moderators noted whether each participant wore the mask at the crown, back or lower part of the head. The participants filled out an evaluation sheet containing questions regarding their perceived comfort and fit of the mask. Specifically, the participants were asked to rate how easy the mask was to don, its breathability in and out, the overall physical comfort, and the comfort of various parts of the mask such as the chamber of the mask, the upper part of the mask, and sealing member. The rating was done on a scale of 1 to 5, with 1 as the worst rating, and 5 as the highest rating. The participants were also asked if the mask caused fogging of their eyewear, whether there was a little or a lot of fogging, and where the fogging occurred. The participants were also asked whether the mask stayed in place while talking and making head movements from side to side and up and down. If the mask moved, participants were asked to note where exactly the movement occurred.

[0111] Next, the participants were then asked to do some light physical activities for five minutes, such as moving books around. Then, the participants were asked to take the stroop color test again for another five minutes, while wearing the mask, to determine whether the presence of the mask distracted them while taking the test. The participants again filled out an evaluation sheet with the same questions regarding perceived comfort, fit, and whether fogging occurred. They were also asked whether o the mask provided adequate facial coverage, how easy the mask was to doff, whether they liked the appearance of the mask, and whether they preferred it compared to their current mask.

[0112] The participants' answers were converted from the scale of 1-5 to percent favorability. The participants' answers are summarized in Table 2 below. A dash "-" indicates that when a particular criteria was not tested or was not applicable.

TABLE 2

Criteria	First Evaluation (% favorable)	Second Evaluation (% favorable)	Overall (% favorable)
Breathability In	93	98	—
Breathability Out	87	92	—
No Fogging	83	83	—
Overall Physical Comfort	88	90	—
Ease of Donning	—	—	78
Chamber Size Comfort	—	—	87
Upper Part Comfort	—	—	93
Sealing Member Comfort	—	—	88
No Mask Movement	—	—	75
Adequate Facial Coverage	—	—	94
No Distraction During Stroop Test	—	—	97
Ease of Doffing	—	—	100
Appearance of Mask	—	—	100
Prefer vs. Current	—	—	93

[0113] As shown in Table 2, the participants found the mask of the invention to provide high levels of comfort in both the first and second evaluations. Specifically, the participants found the mask to be easy to don and to provide excellent breathability and comfort. Notably, the participants found that the mask caused very little fogging of their eyewear and did not move significantly during the routine head and facial movements that occurred while performing the light physical activities. In addition, the participants stated that the mask provided adequate facial coverage, was easy to doff, and the appearance was favored by the participants. It was also found that the presence of the mask did not cause much distraction during the stroop color test. Overall, 93% of participants preferred the mask of the invention over the mask they currently use.

[0114] The results discussed above in Experimental 1 and Experimental 2 demonstrate that the masks of the invention provide wearers of a wide range of sizes with reduced fogging of a wearer's eyewear, reduced contact with a wearer's lips, and improved comfort and fit, as compared with commonly-used masks. The masks of the invention also facilitate their proper use as they include only one set of ties or one strap, while commonly-used masks include two sets of ties.

What is claimed is:

1. A mask comprising:

a body portion for covering a wearer's face; and

a sealing member that conforms to the wearer's face to provide a seal between the body portion and the wearer's face.

2. The mask of claim **1**, wherein the sealing member is attached to an upper part of the body portion.

3. The mask of claim **1**, wherein the sealing member includes a fold.

4. The mask of claim **3**, wherein the sealing member forms a pocket that conforms to the wearer's face and reduces or prevents the wearer's breath from escaping from gaps between the wearer's nose and cheeks and an upper part of the body portion by at least partially closing the gaps and channeling the breath away from the gaps.

5. The mask of claim **3**, wherein the sealing member includes a center section, two side sections, and two semi-arcuate regions between the center section and the side sections.

6. The mask of claim **5**, wherein the center section is narrower than the side sections and the semi-arcuate regions.

7. The mask of claim **3**, wherein the sealing member has a rectangular shape.

8. The mask of claim **1**, wherein the sealing member is formed of a flexible material.

9. The mask of claim **8**, wherein the sealing member is formed of a flexible soft material that exhibits an air permeability of 10 cubic feet/min or less, as measured by the WSP 70.1 standard, or is air impermeable.

10. The mask of claim **1**, wherein the sealing member is formed of foam.

11. The mask of claim **1**, wherein the body portion comprises pleats.

12. A mask of claim **1**, further comprising:

a single set of ties or a single strap for securing the mask to the wearer's face; and

a set of restraint members positioned at the body portion for orienting or restraining the single set of ties or a single strap to the wearer's face.

13. The mask of claim **12**, wherein the set of restraint members includes a set of sleeves.

14. The mask of claim **12**, wherein the set of restraint members includes a set of loops.

15. The mask of claim **12**, wherein the set of restraint members are formed of elastic or flexible materials.

16. The mask of claim **1**, further comprising:

a barrier panel that reduces or prevents vapor from the wearer's breath from passing through the body portion.

17. The mask of claim **16**, wherein the barrier panel is made of a material that exhibits air permeability of 10 cubic feet/min or less as measured by the WSP 70.1 standard or is vapor impermeable.

18. The mask of claim **16**, wherein the barrier panel is positioned on or within the body portion.

19. A mask of claim **1**, further comprising:

a stiffening member that reduces or prevent the collapse of the body portion into the wearer's face.

20. The mask of claim **19**, wherein the stiffening member is positioned on or within the body portion.

21. The mask of claim **1**, further comprising:

a deformable member that may be bent or pressed by a wearer into a configuration that allows the body portion to conform to the wearer's face.

22. The mask of claim **21**, wherein the deformable member is positioned on or within an upper part of the body portion.

23. A mask comprising:

a body portion for covering a wearer's face, having an upper part; and

a sealing member that conforms to the wearer's face and reduces or eliminates gaps that may be present between the wearer's nose and cheeks and the upper part of the body portion.

24. A mask comprising:

a body portion for covering a wearer's face, having an upper part; and

a sealing member that conforms to the wearer's face and reduces or prevents the wearer's breath from escaping from gaps between the wearer's nose and cheeks and the upper part of the body portion by at least partially closing the gaps and channeling the breath away from the gaps.

* * * * *