Sept. 19, 1939. L. BLACKMORE 2,173,644

TRUNK HINGE

Filed Oct. 22, 1937

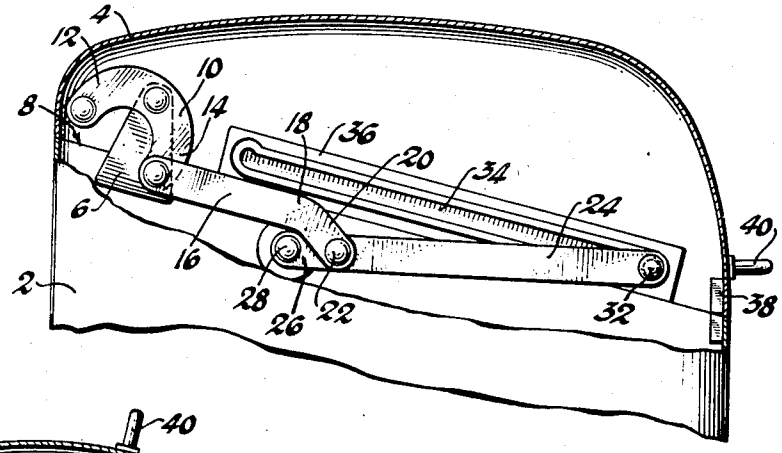

Fig. 1

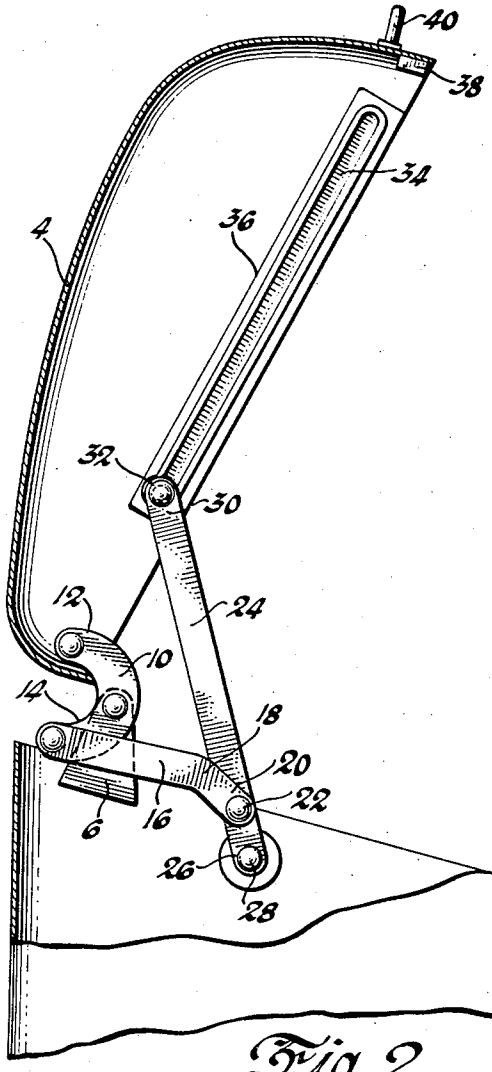

Fig. 2

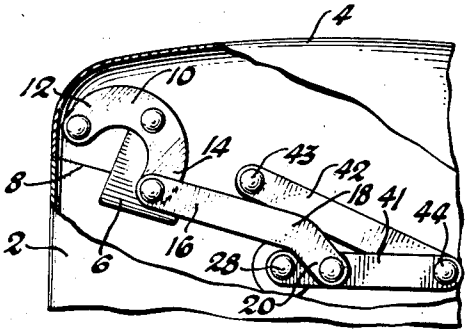

Fig. 3

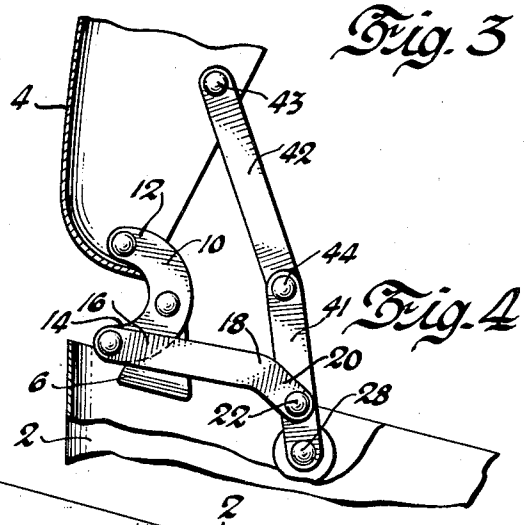

Fig. 4

Inventor
Lloyd Blackmore

By Blackmore, Spencer & Flint
Attorneys

Patented Sept. 19, 1939 2,173,644

UNITED STATES PATENT OFFICE

2,173,644

TRUNK HINGE

Lloyd Blackmore, Detroit, Mich., assignor to General Motors Corporation, Detroit, Mich., a corporation of Delaware

Application October 22, 1937, Serial No. 170,316

4 Claims. (Cl. 16—163)

This invention relates to hinge structures and more particularly to a hinge structure for mounting a curved or arch-shaped cover or lid over a container. The hinge is especially adaptable for trunks or the front hoods and rear decks of automobiles.

It is the principal object of the invention to design a novel hinge or linkage which will simultaneously raise and move forward the curved rear end of the cover. This raising and moving forward of the cover will throw it free of the receptacle or container on which it is mounted and will give a free access to the interior. Additionally, when closing the cover the downward and rearward movement thereof will coincidentally and evenly seat the cover sides to the container so that a very tight seal between the cover and container is obtained.

In the drawing like numerals of reference refer to corresponding parts in the several figures, in which

Figure 1 is a side view of a trunk or other container with the lower part broken away and showing the operating members of the hinge.

Figure 2 is a view similar to Figure 1 but with the cover raised and showing the position of the hinge members in the open position of the cover.

Figures 3 and 4 are side views showing a slightly modified form of the hinge shown in Figures 1 and 2.

On the drawing the receptacle or container is indicated at 2 provided with a cover or lid 4 which in the down position fits closely over the container 2 as is best shown in Figure 1.

At the side of the container 2 adjacent the rear thereof a bracket 6 is secured thereto and projects upwardly over the edge 8 of the container and is provided with an eye at its uppermost part. In the eye of the bracket 6 there is a pivotal mounting for an arm 10 which may be arcuate as shown on the drawing or of elbowed shape. This arm 10 is pivoted at substantially its midpoint and at one of its ends 12 it has the cover 4 pivotally connected thereto. The other and downwardly extending end 14 has pivoted thereto the link 16 which extends forwardly and is bent as shown at 18, the end 20 of the link extending downward. The end 20 is pivoted as at 22 to a lever 24, the lower extremity 26 thereof being pivoted at 28 to a side wall or bracket adjacent the top of the container 2. The upper end 30 of the lever 24 has a stud 32 secured therein, and this stud operates in a slot 34 formed in a plate 36 secured to the inside of the cover 4.

It will, of course, be understood that the hinge structure 10, 16, and 24 shown in Figures 1 and 2 may be and generally is duplicated one at each side of the container 2 and cover 4.

The front edges of the container 2 and the cover 4 are shown provided with the usual lock 38 and handle 40 which form no part of the present invention.

The operation of the device is as follows: assuming the parts to be in the position shown in Figure 1, the cover 4 is raised by means of the handle 40. This will cause the lever 24 to be raised and swing on its pivot 28 and at the same time cause the stud 32 to move in the slot 34 from the right hand position toward the left hand position. This movement will move the pivot 22 around the point 28 as a center and cause the link 16 to move rearwardly. The rearward movement of the link 16 will in turn push on the downward end of the arm 10 and cause the upper end 12 to move upwardly and toward the right in Figure 1 to raise the lid 4 upwardly and at the same time move it forwardly so that in the raised position the parts will be as shown in Figure 2. When the lid is lowered the stud 32 will move in the slot 34 from the position shown in Figure 2 to the position occupied in Figure 1. This movement of the lever 24 will pull along therewith the link 16 and this movement of the link 16 will simultaneously pull on the end 14 of the arm 10 to return the hinged end of the cover 4 rearwardly and downwardly onto the receptacle 2.

When the parts are in the position shown in Figure 2 the linkage is self-supporting and supports the cover 4 in its upright position. The link 16 interconnected between the arm and lever 24 positively guides the cover in its movement to or from raised position. Likewise in the modification shown in Figures 3 and 4 the lever 24 with the stud 32 at the end sliding in the slotted plate 36 is replaced by the ordinary expedient of a toggle comprising the lever 41 pivoted to the receptacle at 28 and the lever 42 pivoted to the cover at 43 and to the lever 41 at 44.

It is believed the action of these parts is quite clearly shown in the drawing, that is, when the cover is being closed the levers 41 and 42 fold as a toggle and the link 16 s pulled to force the rear of the cover securely in place on the container.

I claim:

1. In a hinge for a movable closure member, a stationary bracket, an arm pivoted between its ends to the bracket, said closure pivoted to one end of the arm, a link pivoted at its end to the other end of the arm, a lever pivoted at one end

on a stationary pivot, said link pivoted to said lever, the other end of the lever having a sliding engagement with the closure member, the movement of the member from closed to open position causing the lever to move the link to cause the arm to swing on its pivot and simultaneously raise the hinged end of the cover and move it forwardly.

2. In a hinge for movably hinging a closure to a container, an arm pivoted to the container, said closure pivotally connected to one end of the arm, a link connected to said arm at its other end, a lever pivoted to the container at one end, means to connect the other end of the lever to the closure, said link pivoted to the lever intermediate its ends, the movement of the closure from closed to open position causing the lever to move the link to cause the arm to swing on its pivot and simultaneously raise the hinged end of the cover and move it forwardly.

3. In a hinge for movably hinging a closure member to a container, a crank arm pivoted at its center to the container and at one end to said closure, a link connected to the other end of said arm, a lever pivoted to the container at one end, a slotted member on the closure, means to cause the other end of the lever to ride in the slot, said link pivoted to the lever intermediate its ends, the movement of the closure member from closed to open position causing the lever to move the link to cause the crank arm to swing on its pivot and thereby simultaneously raise the hinged end of the cover and more it forwardly.

4. In a means for simultaneously raising and moving forwardly the hinged end of a cover for a container, a bracket extending above the top of the container, an arm pivoted intermediate its ends to said bracket, said cover pivotally mounted on one end of the arm, a jointed lever mechanism pivoted to the container forwardly of the bracket and to the cover, and a link interconnecting the arm and the lever mechanism, the movement of said cover from closed to open position causing the lever mechanism to move the link to cause the arm to swing on its pivot and simultaneously raise the hinged end of the cover and move it forwardly.

LLOYD BLACKMORE.