(12) INTERNATIONAL APPLICATION PUBLISHED UNDER THE PATENT COOPERATION TREATY (PCT)

(19) World Intellectual Property Organization
International Bureau

(43) International Publication Date
23 January 2014 (23.01.2014)

WIPO | PCT

(10) International Publication Number
WO 2014/015102 A1

(51) International Patent Classification:
E21B 33/06 (2006.01)

(21) International Application Number:
PCT/US2013/051004

(22) International Filing Date:
18 July 2013 (18.07.2013)

(25) Filing Language: English

(26) Publication Language: English

(30) Priority Data:
13/553,671 19 July 2012 (19.07.2012) US

(71) Applicant: **CAMERON INTERNATIONAL CORPORATION** [US/US]; 1333 West Loop South, Suite 1700, Houston, Texas 77027 (US).

(72) Inventors: **JURENA, Johnny E.**; Cameron International Corporation, 4601 Westway Park Blvd., Houston, Texas 77041 (US). **MCWHORTER, David J.**; Cameron International Corporation, 4601 Westway Park Blvd., Houston, Texas 77041 (US). **GIBBS, Charles E.**; Cameron International Corporation, 4601 Westway Park Blvd., Houston, Texas 77041 (US). **SHIMONEK, Steven F.**; Cameron International Corporation, 4601 Westway Park Blvd., Houston, Texas 77041 (US).

(74) Agent: **EUBANKS IV, L. Lee**; Eubanks PLLC, 19500 State Highway 249, Suite 465, Houston, Texas 77070 (US).

(81) Designated States *(unless otherwise indicated, for every kind of national protection available)*: AE, AG, AL, AM, AO, AT, AU, AZ, BA, BB, BG, BH, BN, BR, BW, BY, BZ, CA, CH, CL, CN, CO, CR, CU, CZ, DE, DK, DM, DO, DZ, EC, EE, EG, ES, FI, GB, GD, GE, GH, GM, GT, HN, HR, HU, ID, IL, IN, IS, JP, KE, KG, KN, KP, KR, KZ, LA, LC, LK, LR, LS, LT, LU, LY, MA, MD, ME, MG, MK, MN, MW, MX, MY, MZ, NA, NG, NI, NO, NZ, OM, PA, PE, PG, PH, PL, PT, QA, RO, RS, RU, RW, SC, SD, SE, SG, SK, SL, SM, ST, SV, SY, TH, TJ, TM, TN, TR, TT, TZ, UA, UG, US, UZ, VC, VN, ZA, ZM, ZW.

(84) Designated States *(unless otherwise indicated, for every kind of regional protection available)*: ARIPO (BW, GH, GM, KE, LR, LS, MW, MZ, NA, RW, SD, SL, SZ, TZ, UG, ZM, ZW), Eurasian (AM, AZ, BY, KG, KZ, RU, TJ, TM), European (AL, AT, BE, BG, CH, CY, CZ, DE, DK, EE, ES, FI, FR, GB, GR, HR, HU, IE, IS, IT, LT, LU, LV, MC, MK, MT, NL, NO, PL, PT, RO, RS, SE, SI, SK, SM, TR), OAPI (BF, BJ, CF, CG, CI, CM, GA, GN, GQ, GW, KM, ML, MR, NE, SN, TD, TG).

Declarations under Rule 4.17:

— *as to applicant's entitlement to apply for and be granted a patent (Rule 4.17(ii))*

— *as to the applicant's entitlement to claim the priority of the earlier application (Rule 4.17(iii))*

Published:

— *with international search report (Art. 21(3))*

— *before the expiration of the time limit for amending the claims and to be republished in the event of receipt of amendments (Rule 48.2(h))*

(54) Title: BLOWOUT PREVENTER WITH PRESSURE-ISOLATED OPERATING PISTON ASSEMBLY

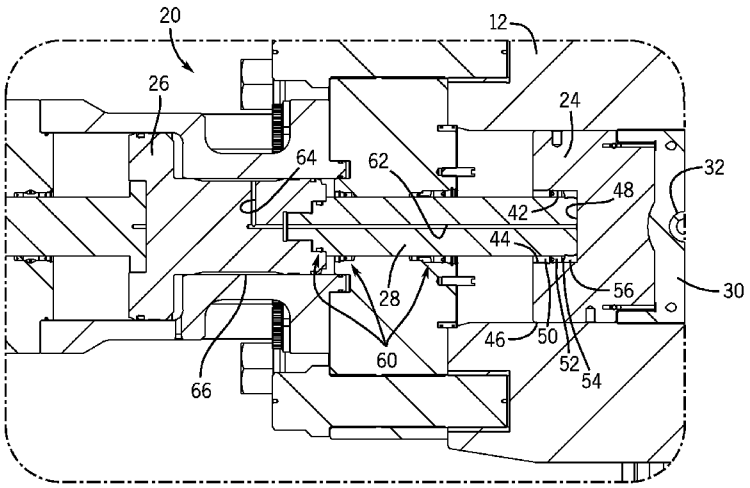

FIG. 8

(57) Abstract: A ram-type blowout preventer (10) including an operating piston assembly (26, 28) isolated from wellbore pressure effects is provided. In one embodiment, a blowout preventer includes piston (26) coupled to a ram (24) by a connecting rod (28), and the connecting rod is inserted into a recess (42) in the ram. A pressure isolating seal (52) may be provided in the recess between the connecting rod and the ram to isolate the end of the connecting rod within the recess from wellbore pressure in the blowout preventer. Additional systems, devices, and methods are also disclosed.

WO 2014/015102 A1

BLOWOUT PREVENTER WITH PRESSURE-ISOLATED OPERATING PISTON ASSEMBLY

BACKGROUND

[0001] This section is intended to introduce the reader to various aspects of art that may be related to various aspects of the presently described embodiments. This discussion is believed to be helpful in providing the reader with background information to facilitate a better understanding of the various aspects of the present embodiments. Accordingly, it should be understood that these statements are to be read in this light, and not as admissions of prior art.

[0002] In order to meet consumer and industrial demand for natural resources, companies often invest significant amounts of time and money in finding and extracting oil, natural gas, and other subterranean resources from the earth. Particularly, once a desired subterranean resource such as oil or natural gas is discovered, drilling and production systems are often employed to access and extract the resource. These systems may be located onshore or offshore depending on the location of a desired resource. Further, such systems generally include a wellhead assembly through which the resource is extracted. These wellhead assemblies may include a wide variety of components, such as various casings, valves, fluid conduits, and the like, that control drilling or extraction operations.

[0003] More particularly, wellhead assemblies often include a blowout preventer, such as a ram-type blowout preventer that uses one or more pairs of opposing rams that press against one another to restrict flow of fluid through the blowout preventer. The rams typically include main bodies (or ram blocks) that receive sealing elements (or ram packers) that press together when a pair of opposing rams close against one another. Often, the rams are driven into and out of a main bore of a blowout preventer by operating pistons coupled to the rams by connecting rods. In a common design, a ram block includes a slot for receiving a button on the end of a connecting rod, which allows the operating piston and connecting rod to push and pull the ram block within the blowout preventer.

SUMMARY

[0004] Certain aspects of some embodiments disclosed herein are set forth below. It should be understood that these aspects are presented merely to provide the reader with a brief summary of certain forms the invention might take and that these aspects are not intended to limit the scope of the invention. Indeed, the invention may encompass a variety of aspects that may not be set forth below.

[0005] Embodiments of the present disclosure generally relate to systems having rams and operating piston assemblies in which the operating piston assemblies are isolated from certain pressure effects in the systems. More specifically, in some embodiments blowout preventers include operating piston assemblies with connecting rods coupled to rams and have seals between the connecting rods and the rams that isolate end faces of the connecting rods from wellbore pressure within the blowout preventer. This isolation may eliminate retraction forces that would otherwise be applied to the connecting rods by the wellbore pressure when the rams are closed at pressure, thereby decreasing forces transferred to wedge lock mechanisms that hold the rams in the closed position and increasing system efficiency. This isolation may also reduce the wellbore assist effect on the ram assemblies when closed at pressure, thereby increasing sealing fatigue life. In one embodiment, rather than being received laterally in a slot open to both an end face and a side of the ram, the connecting rod is threaded into a recess in the end face of the ram. Additionally, some embodiments also include relief paths that allow fluid within pressure-isolated regions in recesses of the rams to escape.

[0006] Various refinements of the features noted above may exist in relation to various aspects of the present embodiments. Further features may also be incorporated in these various aspects as well. These refinements and additional features may exist individually or in any combination. For instance, various features discussed below in relation to one or more of the illustrated embodiments may be incorporated into any of the above-described aspects of the present disclosure alone or in any combination. Again, the brief summary presented above is intended only to familiarize the reader with certain aspects and contexts of some embodiments without limitation to the claimed subject matter.

BRIEF DESCRIPTION OF THE DRAWINGS

[0007] These and other features, aspects, and advantages of certain embodiments will become better understood when the following detailed description is read with reference to the accompanying drawings in which like characters represent like parts throughout the drawings, wherein:

[0008] FIG. 1 is a perspective view of a blowout preventer having a pair of rams that may be extended into a bore of the blowout preventer to restrict flow through the bore in accordance with an embodiment of the present disclosure;

[0009] FIG. 2 is a vertical cross-section of the blowout preventer of FIG. 1, depicting operating piston assemblies coupled to rams in accordance with one embodiment;

[0010] FIG. 3 is a horizontal cross-section of the blowout preventer of FIG. 1 also depicting operating piston assemblies coupled to rams and wedge lock mechanisms that may be engaged to hold the rams in a closed position;

[0011] FIGS. 4 and 5 depict a ram of the blowout preventer of FIG. 1 in accordance with one embodiment;

[0012] FIG. 6 is an exploded view illustrating a connecting rod with the ram of FIGS. 4 and 5 in accordance with one embodiment in which the connecting rod may be coupled to the ram by inserting the connecting rod into a recess formed in an end face of the ram;

[0013] FIG. 7 is a detail view of the portion of the blowout preventer generally enclosed by the line 7–7 in FIG. 2 and depicts a connecting rod and ram assembly in which an end of the connecting rod in a ram is isolated from pressure about the connecting rod behind the ram in the blowout preventer;

[0014] FIG. 8 is a detail view of the portion of the blowout preventer generally enclosed by line 8–8 in FIG. 3 and depicts the connecting rod and ram assembly of

FIG. 7 with a relief path in the connecting rod and a piston for fluid to pass from the pressure-isolated region at the end of the connecting rod;

[0015] FIG. 9 is a further detail view of a portion of the blowout preventer generally enclosed by line 9–9 in FIG. 7, which more clearly illustrates a sealing assembly between the connecting rod and the ram that isolates an end of the connecting rod from wellbore pressure in accordance with one embodiment;

[0016] FIG. 10 is a horizontal cross-section of a blowout preventer having pressure-isolating seals between connecting rods and rams, as well as relief paths through the rams to allow the egress of fluid from the pressure-isolated regions about the ends of the connecting rods in the rams, in accordance with one embodiment;

[0017] FIG. 11 depicts a vertical cross-section of the blowout preventer of FIG. 10; and

[0018] FIG. 12 is a detail view of the portion of the blowout preventer generally enclosed by line 12–12 in FIG. 10.

DETAILED DESCRIPTION OF SPECIFIC EMBODIMENTS

[0019] One or more specific embodiments of the present disclosure will be described below. In an effort to provide a concise description of these embodiments, all features of an actual implementation may not be described in the specification. It should be appreciated that in the development of any such actual implementation, as in any engineering or design project, numerous implementation-specific decisions must be made to achieve the developers' specific goals, such as compliance with system-related and business-related constraints, which may vary from one implementation to another. Moreover, it should be appreciated that such a development effort might be complex and time consuming, but would nevertheless be a routine undertaking of design, fabrication, and manufacture for those of ordinary skill having the benefit of this disclosure.

[0020] When introducing elements of various embodiments, the articles "a," "an," "the," and "said" are intended to mean that there are one or more of the elements. The terms "comprising," "including," and "having" are intended to be inclusive and mean that there may be additional elements other than the listed elements. Moreover, any use of "top," "bottom," "above," "below," other directional terms, and variations of these terms is made for convenience, but does not require any particular orientation of the components.

[0021] Turning now to the drawings, a blowout preventer 10 is illustrated in FIG. 1 by way of example. The depicted blowout preventer 10 includes a hollow main body 12 and a bore 14 that enables passage of fluid or tubular members through the blowout preventer 10. As will be appreciated, the blowout preventer 10 may be coupled to other equipment that facilitates natural resource production. For instance, production equipment or other components may be attached to the top of the blowout preventer 10 via fasteners 16 (provided in the form of studs and nuts in FIG. 1) and the blowout preventer 10 may be attached to a wellhead or spool via flange 18 and additional fasteners.

[0022] Bonnet assemblies 20 secured to the main body 12 include various components that facilitate control of sealing rams disposed in the blowout preventer 10, and locking assemblies 22 enable the sealing rams to be locked in a closed position. Particularly, as illustrated in the cross-sections of FIGS. 2 and 3, the blowout preventer 10 includes a pair of rams 24 actuated by operating piston assemblies that include pistons 26 and connecting rods 28. In operation, a force (e.g., from hydraulic pressure) may be applied to the operating pistons 26 to drive the rams 24 into the bore 14 of the blowout preventer 10. The rams 24 include sealing elements 30, also known as ram packers, that cooperate with one another when driven together to seal the bore 14 and inhibit flow through the blowout preventer 10. When these the rams 24 are moved into the closed position to seal the bore 14, wedge locks 34 (FIG. 3) of the locking assemblies 22 may be moved into position behind tail rods of the pistons 26 to hold the rams 24 in the closed position. This allows the hydraulic pressure acting on the pistons 26 to be reduced (from the closing pressure) while still maintaining the rams 24 in the closed position.

[0023] In the embodiment depicted in FIGS. 2 and 3, the rams 24 are provided in the form of pipe rams configured to seal against one another and about pipe 32 (or another tubular member) in the bore 14. A more detailed example of a ram 24 in the form of a pipe ram is illustrated in FIGS. 4 and 5 and described further below. But it is first noted that rams 24 may be of any desired size and may vary depending on the intended application. For example, different pipe rams 24 may be sized for use with blowout preventers having various bore diameters and the ram packers 30 may be selected according to the diameter of the pipe about which the ram packers 30 are intended to seal. In other embodiments, the rams 24 include variable-bore pipe rams that may be used to seal around pipes having a range of diameters (e.g., 2-7/8 to 4 inches, 2-7/8 to 5 inches, or 3-1/2 to 5-7/8 inches). And although rams 24 are depicted as pipe rams in FIGS. 2–5, still other embodiments could include different rams (e.g., blind rams or shear rams).

[0024] Again with reference to FIGS. 4 and 5, the depicted ram 24 includes a top seal 36 in addition to the ram packer 30. The top seal 36 abuts the surface of the main body 12 above the ram 24 in FIG. 2 and, with the ram packer 30, seals upper and lower portions of the bore 14 from one another. The ram packer 30 and top seal 36 are formed of any suitable material, such as an elastomer. The ram 24 may include latching features to mate with corresponding features of an opposing ram, such as the angled features of the ram above and below the front face of the ram packer 30 in FIG. 4. And as depicted in FIG. 5, the end face 40 of the ram 24 includes a recess 42 having a threaded interior surface 44 and a bottom 48 for receiving an end of the connecting rod 28, although the ram 24 and the connecting rod 28 may be coupled differently (e.g., a snap ring) in other embodiments.

[0025] In some embodiments, such as that of FIG. 5, the recess 42 is formed entirely in the end face 40 without extending to a lateral edge or side 46 of the ram 24. In such an arrangement, the recess 42 may be aligned with the longitudinal axis of the connecting rod 28, which may then be coupled to the ram 24 by inserting the connecting rod 28 into the recess 42 along the longitudinal axis. In one embodiment generally shown in FIG. 6, an end of the connecting rod 28 includes a sealing assembly that enables the connecting rod 28 to be secured to the ram 24 via the recess 42.

Particularly, the depicted sealing assembly includes (in order along the connecting rod 28) a retaining nut 50, a seal 52, a spacer 54, and another retaining nut 56. The retaining nut 50 includes a threaded exterior surface configured to mate with the threaded interior surface 44 of the recess 42. As a result, the connecting rod 28 may be threaded into the recess 42 and retained within the ram 24 by mating engagement of the threads of the surface 44 and the retaining nut 50. The retaining nut 56 includes a threaded interior surface and is threaded onto the end of the connecting rod 28 to retain the seal 52 and the spacer 54 on the connecting rod 28.

[0026] The seal 52 may be formed of any suitable material, such as an elastomer. Once installed in the recess 42, the seal 52 seals against the bore of the recess 42 and isolates a region along an end face of the connecting rod 28 in the recess 42 from pressure on the other side of the seal 52 (e.g., pressure at the end face 40 of the ram 24). Such isolation reduces retraction force on the connecting rod 28 when the ram 24 is actuated into a sealing position. Particularly, when the rams 24 of the blowout preventer 10 are closed, wellbore pressure in the blowout preventer 10 (e.g., within the bore 14 below the rams 24 in FIG. 2) is communicated to regions behind the rams 24 (i.e., between the bonnet assemblies 20 and the end faces 40 of the rams 24). Having the wellbore pressure behind the rams 24 when in the closed position provides a "wellbore assist effect" in that the wellbore pressure applies forces against the end faces 40 of the rams 24 toward the bore 14 of the blowout preventer 10.

[0027] While this wellbore assist effect may help keep rams of a blowout preventer closed at pressure, left unchecked this same wellbore pressure would also apply a retraction force to the end face of a connecting rod in a ram, which in essence operates to try to push the connecting rod away from the bore of the blowout preventer and back into a bonnet assembly. If the operating pistons are not locked into place, a sufficiently large retraction force could cause the rams to open or leak. Also, in arrangements including a connecting rod having a button received in a slot of a ram, a sufficiently large retraction force could damage the button or the slot.

[0028] But unlike previous arrangements susceptible to this retraction force, present embodiments include a seal (such as seal 52) that isolates the operating piston assembly,

and particularly the end face of the connecting rod in the ram, from wellbore pressure. This isolation reduces or eliminates the retraction force on the end face of the connecting rod from the wellbore pressure. The reduction of the retraction force on the connecting rod increases the closing ratio of the actuating piston and ram assembly, resulting in more efficient operation of the operating piston. And this increase in efficiency enables the system to be used at greater maximum pressures or to be reduced in size while handling the same maximum pressure as before. While the present pressure-isolated arrangement may be used in blowout preventers (or other sealing systems) of any rated pressure, this arrangement may find particular use in blowout preventers with higher pressure ratings, such as 20,000 psi, 25,000 psi, 30,000 psi, or even greater.

[0029] One ram 24 and its associated connecting rod 28 installed in the blowout preventer 10 are depicted in FIGS. 7–9 as an example. As shown in the cross-sections of FIGS. 7 and 8, the connecting rod 28 is coupled to the ram 24 on one end and to the piston 26 on the other end. In this embodiment, the connecting rod 28 is threaded into the piston 26. And in addition to the seal 52, other pressure-isolating seals are provided throughout the blowout preventer 10, such as seals 60 along the connecting rod 28.

[0030] As noted above, the inclusion of a pressure-isolating seal 52 between the connecting rod 28 and the ram 24 isolates the operating piston assembly from wellbore pressure effects, reducing or eliminating retracting pressure on the end face 70 (FIG. 9) of the connecting rod in the recess 42. The seal 52 may have any suitable configuration. For instance, in FIG. 9 the seal 52 is depicted as a two-piece seal with an inner seal component 74 and an outer seal component 76. In other embodiments the seal may have a different construction, such as a single-component seal. Additionally, in some embodiments the portion of the recess 42 abutting the seal 52 may have a finish or an inlay that facilitates sealing or reduces wear.

[0031] But even with the pressure-isolating seal 52, it is possible in some instances that pressurized fluid may be present between the end face 70 and the bottom 48 of the recess 42. Consequently, in some embodiments the blowout preventer 10 includes a

relief path (which may also be referred to as a vent path) leading away from the portion of the recess isolated by the seal 52 to allow fluid in the portion to escape from the recess 42. In the blowout preventer of FIGS. 7–9, this relief path includes passageways or conduits 62 and 64 through the connecting rod 28 and the piston 26. Particularly, rather than being trapped, fluid in the recess 42 behind the seal 52 (e.g., between the end face 70 of the connecting rod 28 and the bottom 48 of the recess 42) may escape the recess 42 by passing into an opening of conduit 62 in the end face 70 of the connecting rod 28 and through the conduit 62 to the conduit 64 of the operating piston 26. And in the present embodiment, the conduit 64 leads to a chamber 66 of the bonnet assembly 20 (which may be referred to as a "slack" chamber for the piston 26), allowing fluid to pass from the base of the recess 42 to the chamber 66.

[0032] A blowout preventer 10 of another embodiment is depicted in the cross-sections provided in FIGS. 10–12. In these figures, the blowout preventer 10 includes different relief paths from the recesses 42, but is otherwise similar to the blowout preventer depicted in the previous figures. More specifically, rather than having relief paths from the recesses 42 that pass through the connecting rods 28, the pistons 26, and into slack chambers 66 in the bonnet assemblies 20, the blowout preventer 10 of FIGS. 10–12 includes relief paths, in the form of passageways or conduits 80, that extend through the rams 24 themselves. In this embodiment, fluid passes from the bottom of the recesses 42 behind the seals 52 of each ram 24, through the conduits 80, and into the bore 14 of the main body 12 of the blowout preventer.

[0033] While the aspects of the present disclosure may be susceptible to various modifications and alternative forms, specific embodiments have been shown by way of example in the drawings and have been described in detail herein. But it should be understood that the invention is not intended to be limited to the particular forms disclosed. Rather, the invention is to cover all modifications, equivalents, and alternatives falling within the spirit and scope of the invention as defined by the following appended claims.

CLAIMS

1. A system comprising:

a hollow body (12);

a ram (24) disposed in the hollow body; and

a bonnet assembly (20) coupled to the hollow body, the bonnet assembly including a piston (26) and a connecting rod (28) that connects the piston to the ram to enable the piston to drive the ram within the hollow body, wherein the connecting rod is coupled to the ram with a pressure-isolating seal (52).

2. The system of claim 1, comprising a locking assembly (22) coupled to the bonnet assembly, the locking assembly including a wedge lock (34) that enables the ram to be maintained in a closed position in the hollow body regardless of the level of hydraulic pressure on the piston.

3. The system of claim 2, wherein the connecting rod includes an end face (70) received by the ram.

4. The system of claim 3, wherein the system comprises a blowout preventer (10) including the hollow body, the ram, the piston and the connecting rod of the bonnet assembly, and the pressure-isolating seal.

5. The system of claim 4, wherein the pressure-isolating seal isolates the end face of the connecting rod received by the ram from wellbore pressure within the blowout preventer.

6. The system of claim 3, comprising a relief path (62, 64, 80) enabling fluid to exit a pressure-isolated region between the end face of the connecting rod and the ram.

7. The system of claim 6, wherein the relief path (62) extends from the pressure-isolated region through the connecting rod.

8. The system of claim 7, wherein the relief path (62, 64) extends from the pressure-isolated region to a slack chamber (66) within the bonnet assembly.

9. The system of claim 6, wherein the relief path (80) extends from the pressure-isolated region through the ram.

10. The system of claim 1, the ram including a recess (42) formed in an end face (40) of the ram to enable receipt of the connecting rod within the recess, wherein the connecting rod and the ram are constructed to allow the connecting rod to engage the recess by aligning the ram with the longitudinal axis of the connecting rod and moving the connecting rod and the ram together along the longitudinal axis such that the connecting rod enters the recess and into the ram from the end face.

11. The system of claim 10, comprising a threaded retaining nut (50) configured to be positioned about the connecting rod and to engage a threaded surface (44) of the recess.

12. The system of claim 10, wherein the connecting rod and the ram are assembled to one another such that the connecting rod is positioned within the recess of the ram and a seal (52) is provided between the connecting rod and the ram within the recess, the seal isolating an end face (70) of the connecting rod within the recess from pressure at the end face of the ram.

13. The system of claim 12, wherein the seal is disposed about the connecting rod between a first retaining nut (50) with an exterior threaded surface and a

second retaining nut (56) that is threaded onto the connecting rod via an interior threaded surface of the second retaining nut.

14. A method comprising:

aligning a ram (24) of a blowout preventer (10) with a connecting rod (28); and

coupling the ram to the connecting rod such that a pressure-isolating seal (52) is positioned between the ram and the connecting rod.

15. The method of claim 14, wherein coupling the ram to the connecting rod includes threading the connecting rod into a recess (42) in the ram.

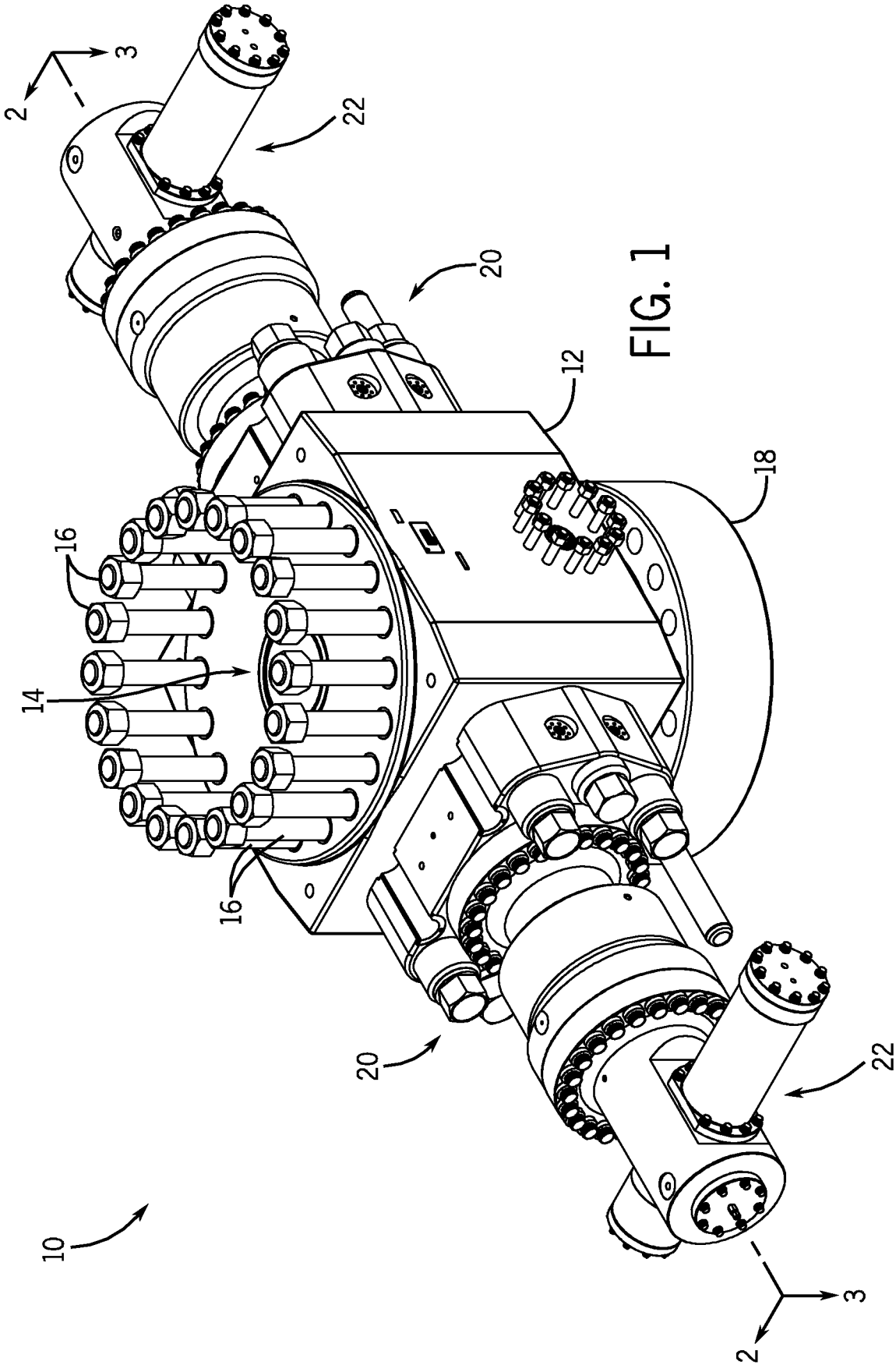

FIG. 1

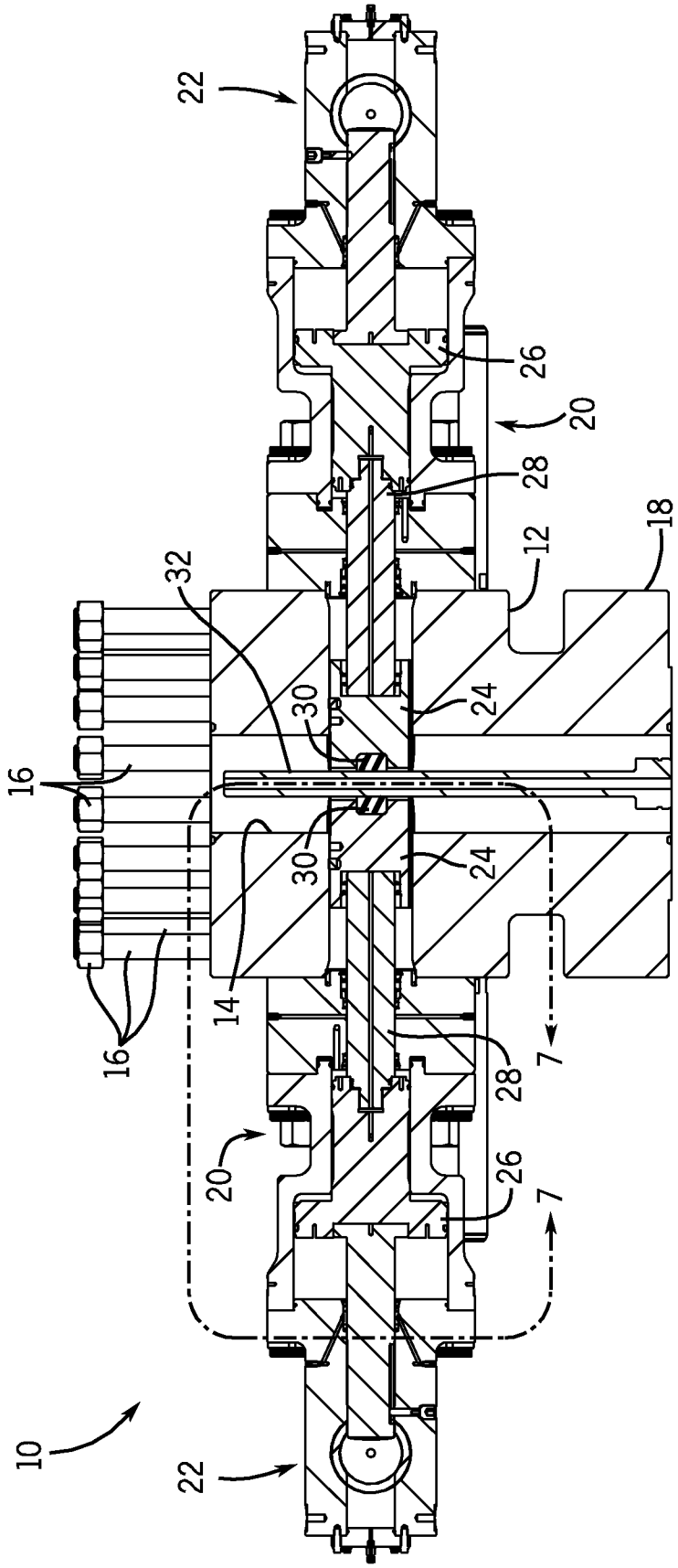

FIG. 2

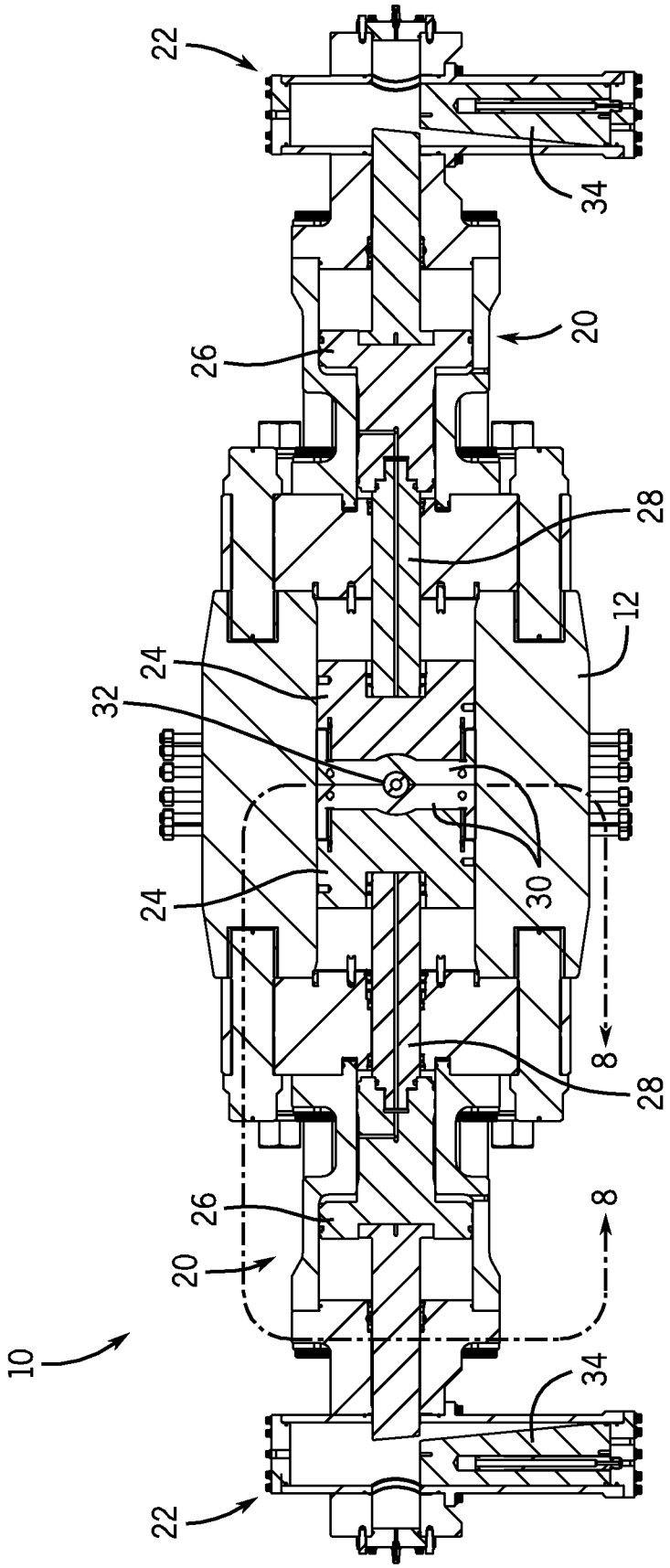

FIG. 3

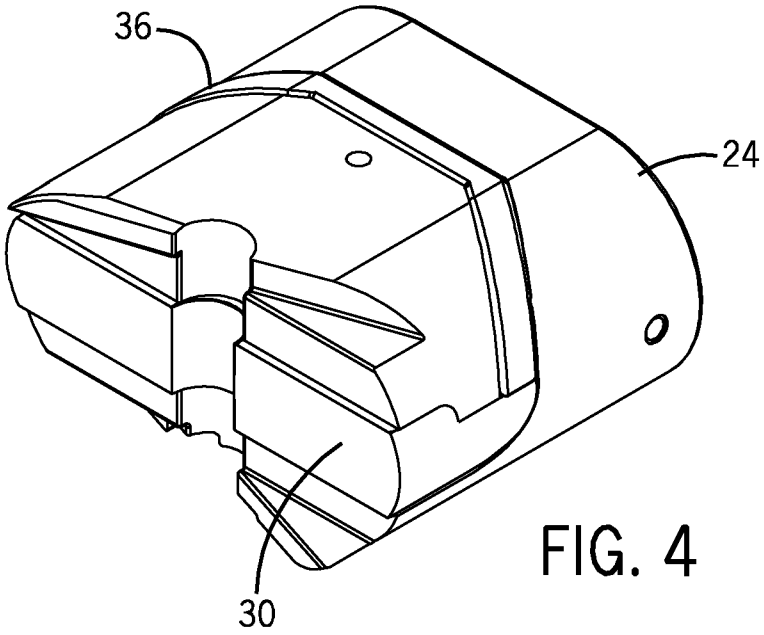

FIG. 4

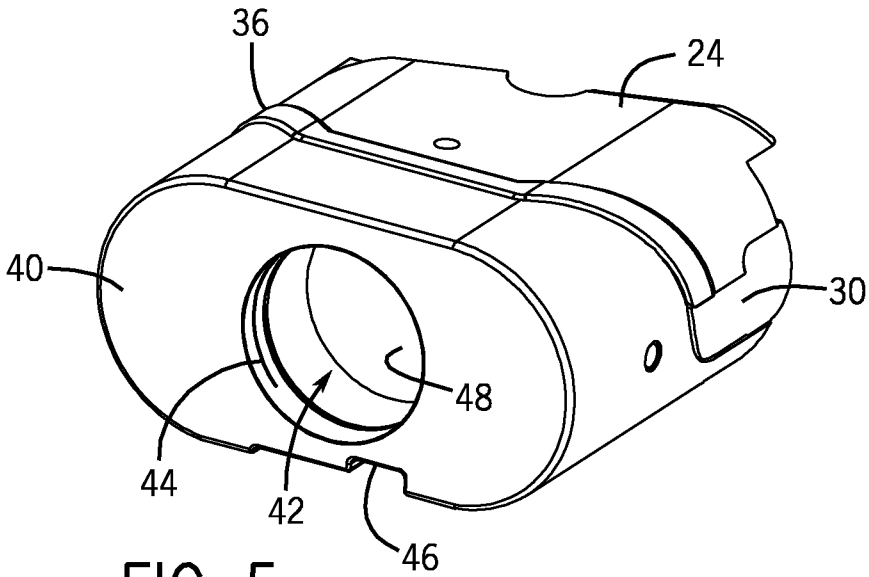

FIG. 5

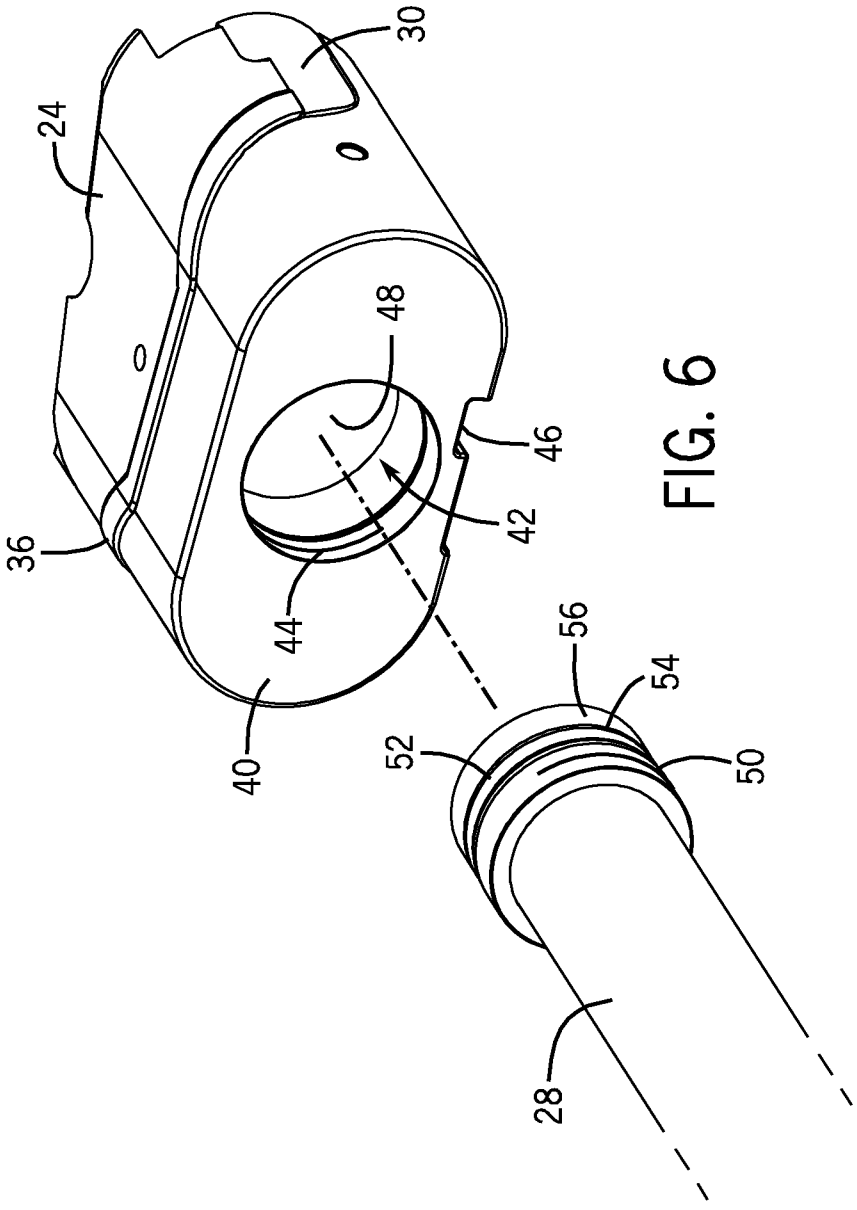

FIG. 6

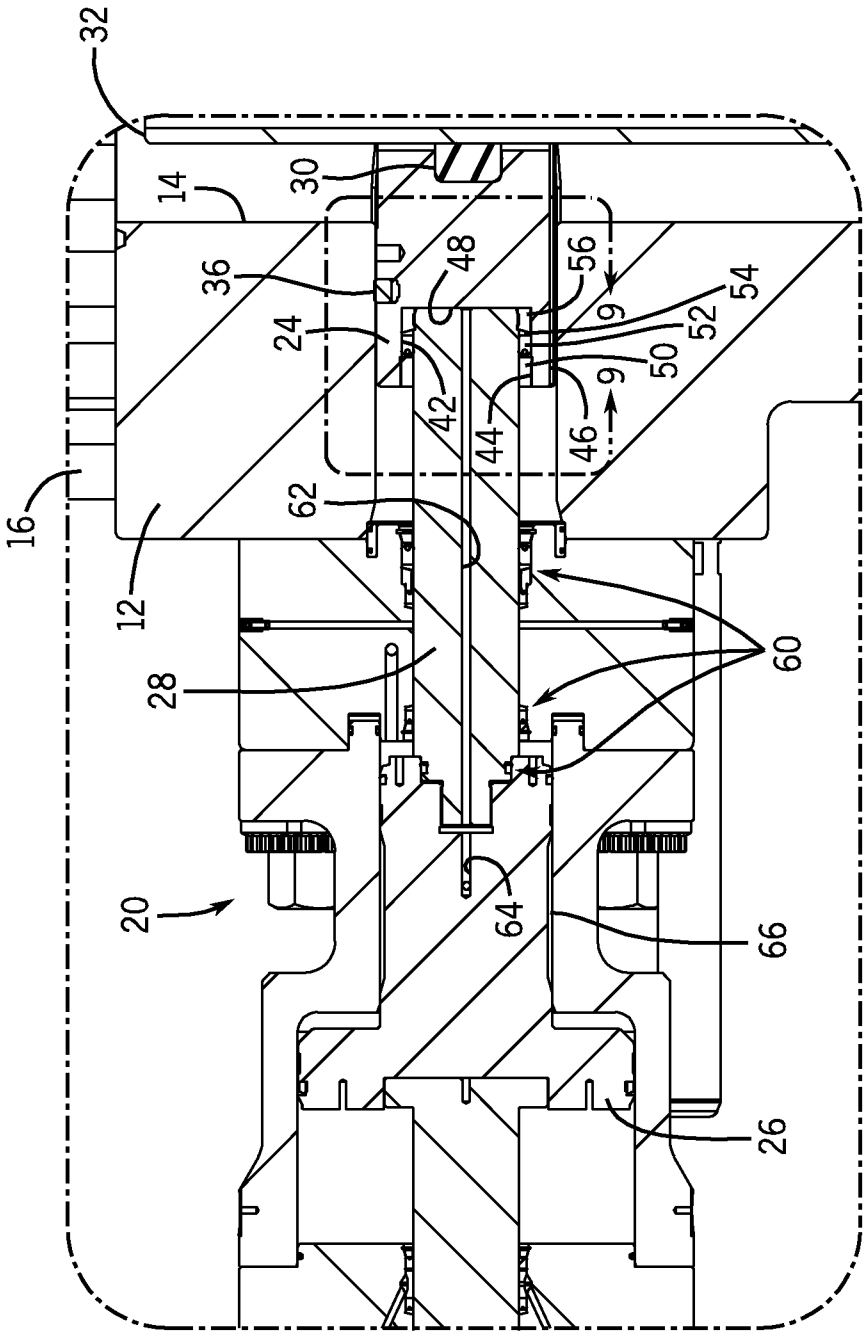

FIG. 7

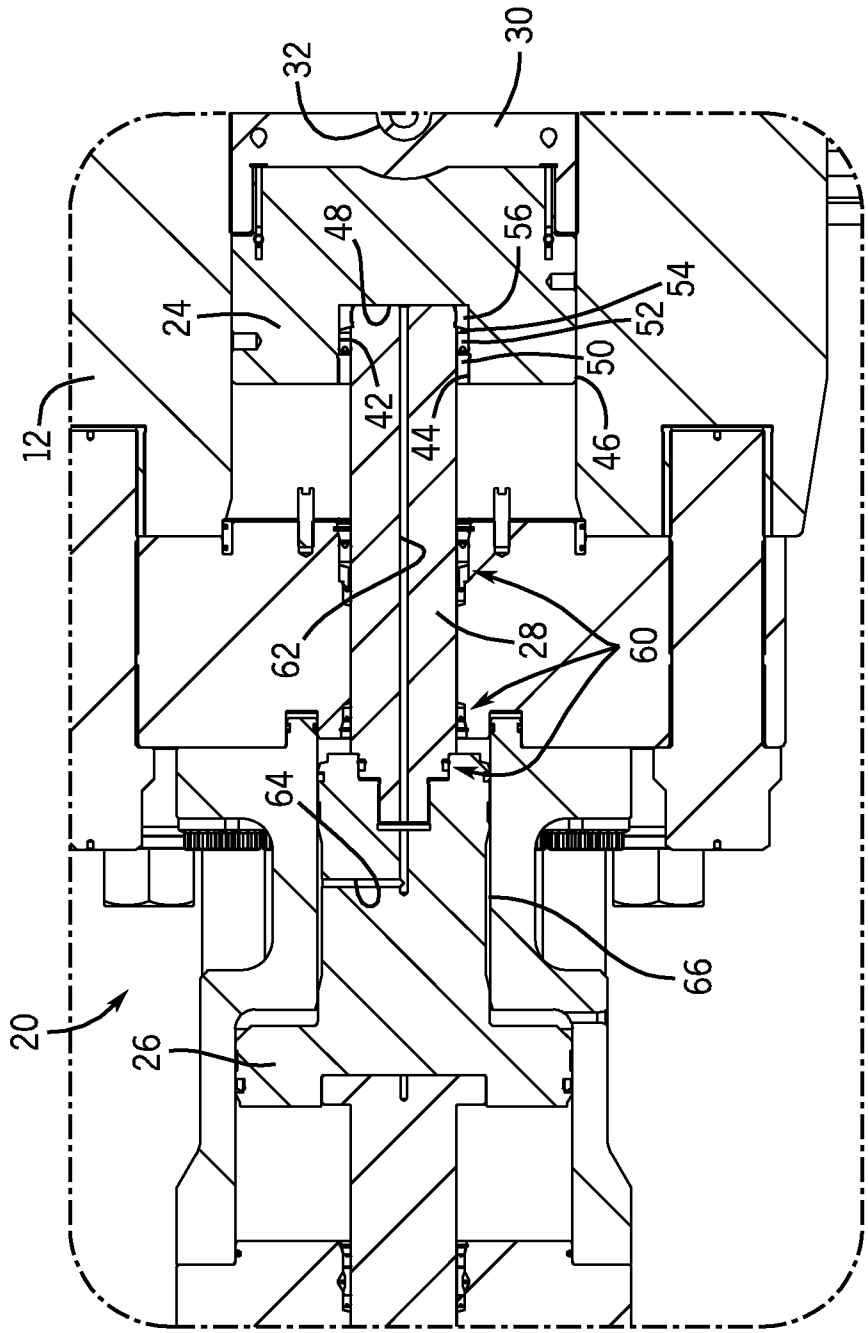

FIG. 8

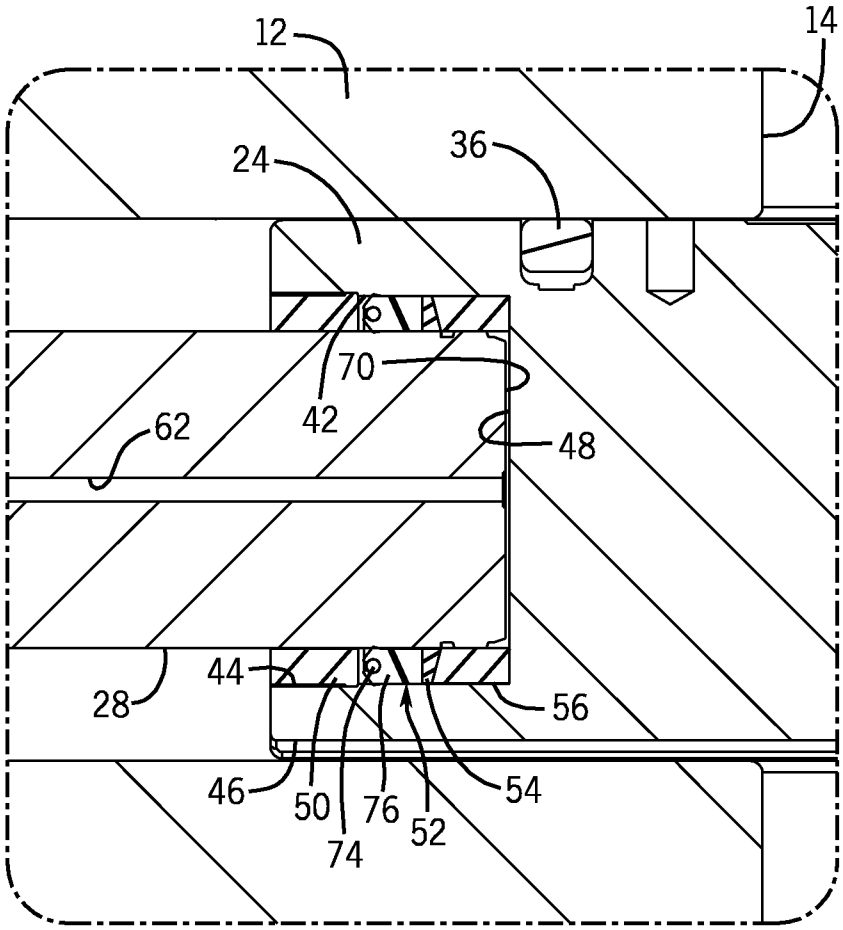

FIG. 9

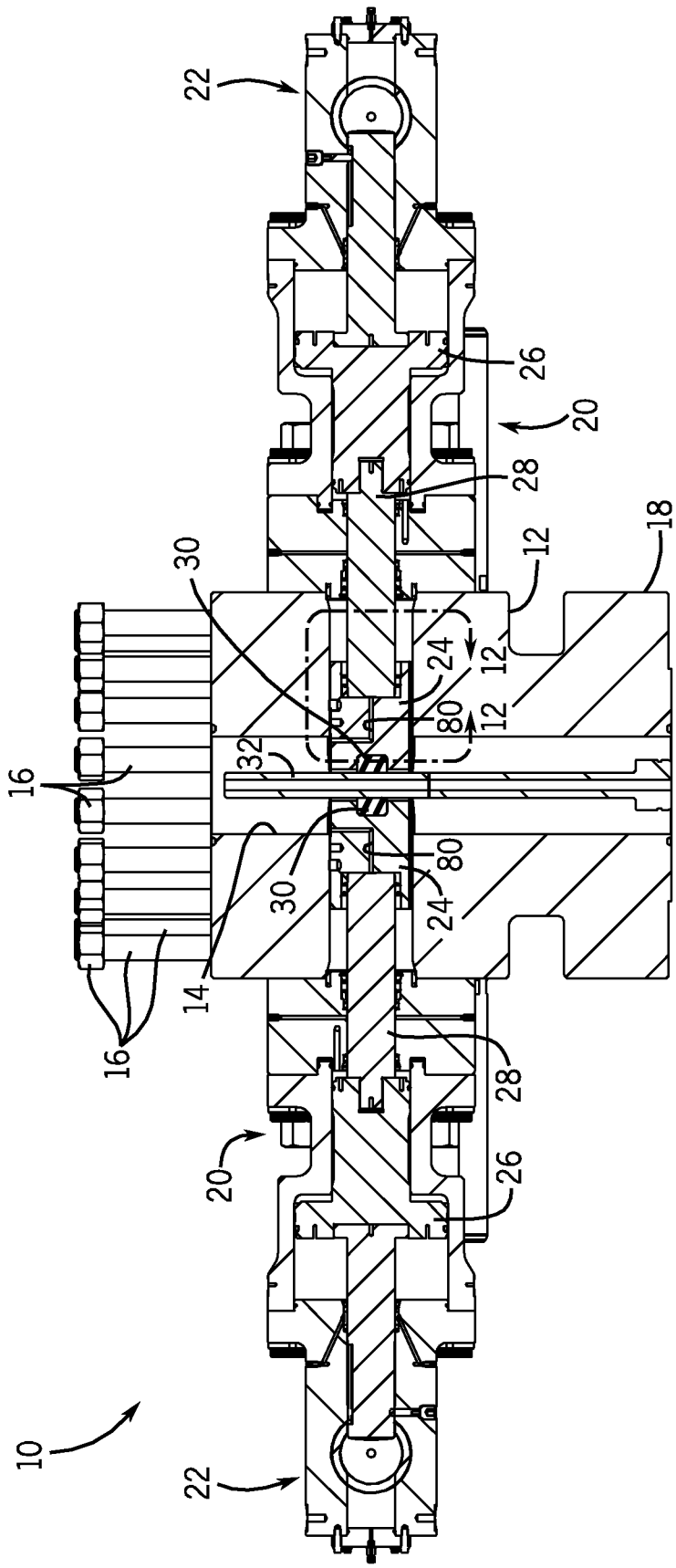

FIG. 10

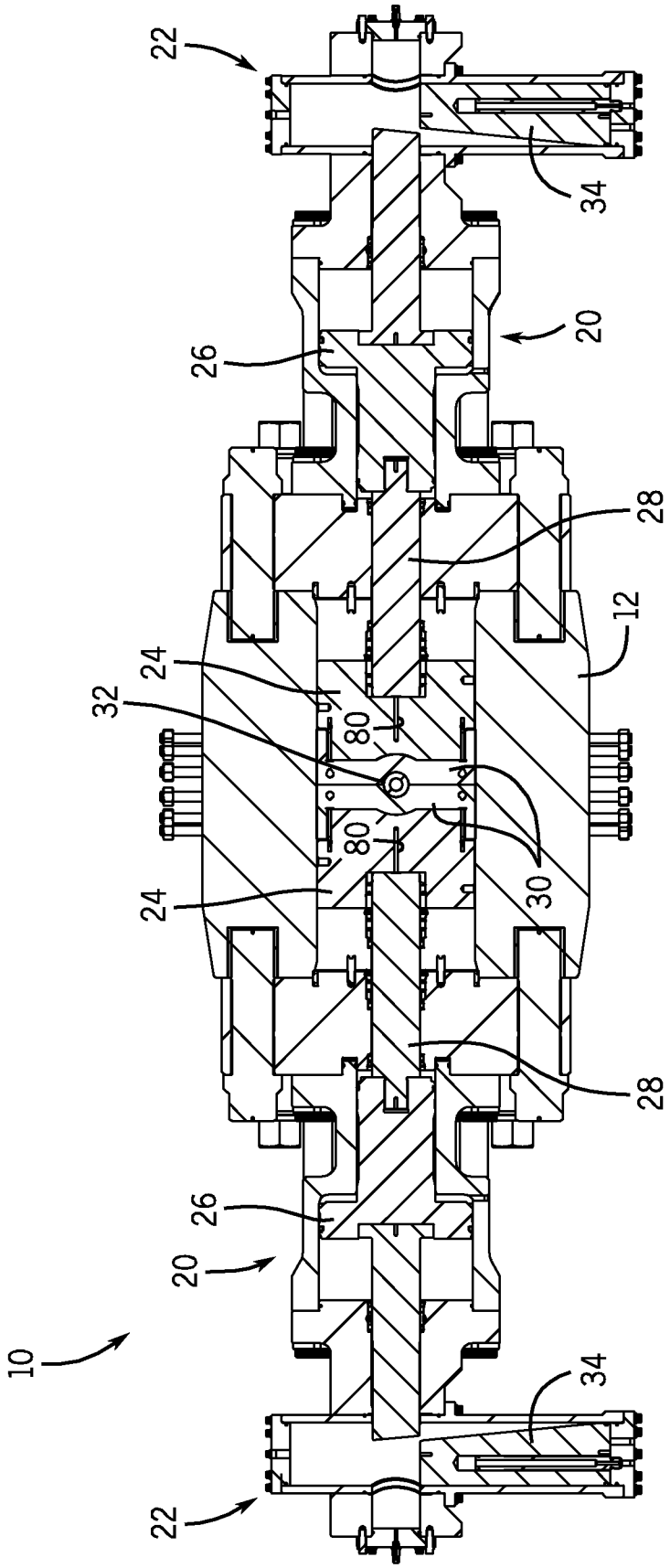

FIG. 11

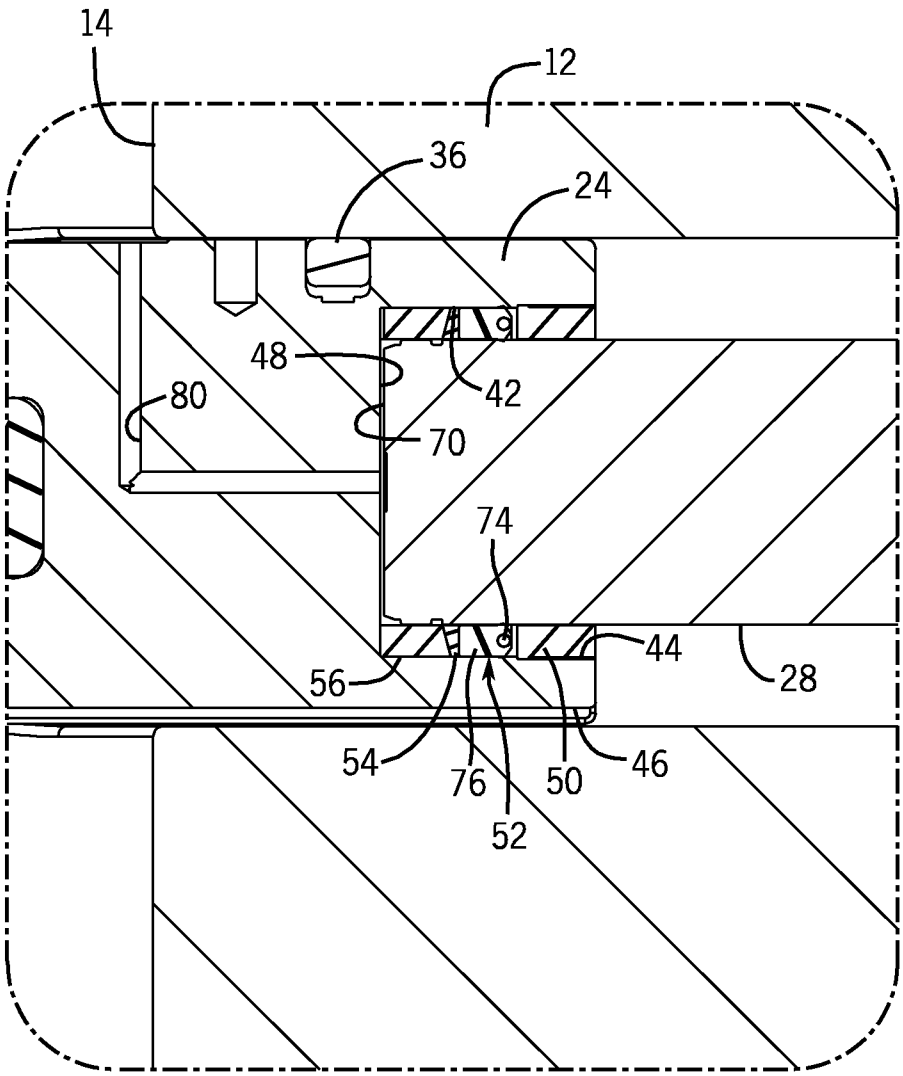

FIG. 12

INTERNATIONAL SEARCH REPORT

International application No.
PCT/US2013/051004

A. CLASSIFICATION OF SUBJECT MATTER
IPC(8) - E21B 33/06 (2013.01)
USPC - 251/1.1
According to International Patent Classification (IPC) or to both national classification and IPC

B. FIELDS SEARCHED

Minimum documentation searched (classification system followed by classification symbols)
IPC(8) - E21B 33/06 (2013.01)
USPC - 91/519; 92/61; 251/1.1, 1.3

Documentation searched other than minimum documentation to the extent that such documents are included in the fields searched
CPC - E21B 33/06, 33/062 (2013.01)

Electronic data base consulted during the international search (name of data base and, where practicable, search terms used)
Orbit, Google Patents, Google

C. DOCUMENTS CONSIDERED TO BE RELEVANT

Category*	Citation of document, with indication, where appropriate, of the relevant passages	Relevant to claim No.
X --- Y	US 4,943,031 A (VAN WINKLE) 24 July 1990 (24.07.1990) entire document	1, 10, 14 --- 2-9, 11, 15
Y	US 2012/0055679 A1 (VAN WINKLE) 08 March 2012 (08.03.2012) entire document	2-9
Y	US 2005/0242308 A1 (GAYDOS) 03 November 2005 (03.11.2005) entire document	7, 8
Y	US 4,290,577 A (OLSON) 22 September 1981 (22.09.1981) entire document	11, 15
A	US 7,374,146 B2 (WHITBY et al) 20 May 2008 (20.05.2008) entire document	1-15
A	US 5,199,683 A (LE) 06 April 1993 (06.04.1993) entire document	1-15

☐ Further documents are listed in the continuation of Box C. ☐

* Special categories of cited documents:
"A" document defining the general state of the art which is not considered to be of particular relevance
"E" earlier application or patent but published on or after the international filing date
"L" document which may throw doubts on priority claim(s) or which is cited to establish the publication date of another citation or other special reason (as specified)
"O" document referring to an oral disclosure, use, exhibition or other means
"P" document published prior to the international filing date but later than the priority date claimed
"T" later document published after the international filing date or priority date and not in conflict with the application but cited to understand the principle or theory underlying the invention
"X" document of particular relevance; the claimed invention cannot be considered novel or cannot be considered to involve an inventive step when the document is taken alone
"Y" document of particular relevance; the claimed invention cannot be considered to involve an inventive step when the document is combined with one or more other such documents, such combination being obvious to a person skilled in the art
"&" document member of the same patent family

Date of the actual completion of the international search	Date of mailing of the international search report
09 December 2013	23 DEC 2013
Name and mailing address of the ISA/US Mail Stop PCT, Attn: ISA/US, Commissioner for Patents P.O. Box 1450, Alexandria, Virginia 22313-1450 Facsimile No. 571-273-3201	Authorized officer: Blaine R. Copenheaver PCT Helpdesk: 571-272-4300 PCT OSP: 571-272-7774