July 2, 1935. P. B. WEIS 2,006,663

RIBBON SPOOL

Filed Dec. 21, 1933

Fig. 1

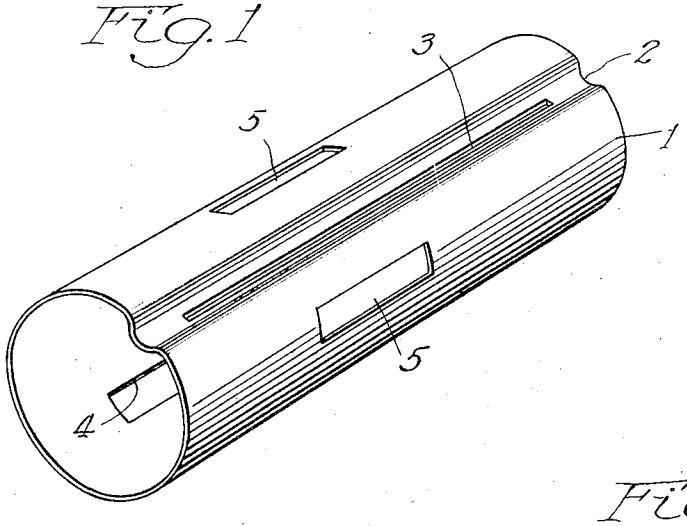

Fig. 3

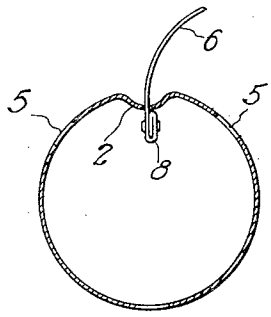

Fig. 2

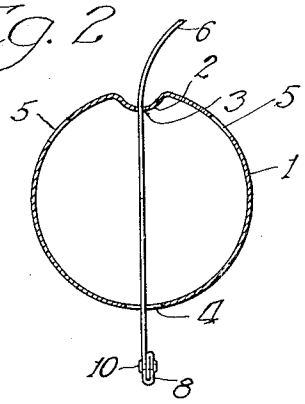

Fig. 5

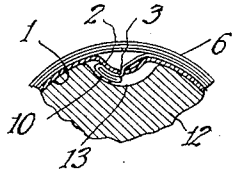

Fig. 4

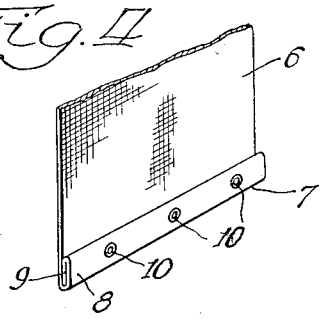

Witness:
V. Silgander

Inventor
Paul B. Weis
By:
Hill & Hill Attys

Patented July 2, 1935 2,006,663

UNITED STATES PATENT OFFICE

2,006,663

RIBBON SPOOL

Paul B. Weis, Aurora, Ill., assignor to The Miller-Bryant-Pierce Co., Aurora, Ill., a corporation of Illinois

Application December 21, 1933, Serial No. 703,366

8 Claims. (Cl. 242—74)

My invention belongs to that general class of devices known as spools, and relates more particularly to a spool for carrying inked ribbons or the like, the ribbon generally being provided with a spool at each end and the ribbon being rolled back and forth from one spool to the other. The same is adapted for various types of writing machines in which inked ribbons are employed, but its use is not limited to such machines. The invention has among its objects the production of a device of the kind described which is extremely simple, inexpensive, durable, efficient and satisfactory for use wherever found applicable.

More particularly it has as an object the production of a satisfactory spool which is not split or separable, to which the ribbon may be quickly, easily and securely attached or detached.

Many other objects and advantages of the construction herein shown and described will be obvious to those skilled in the art from the disclosure herein given.

To this end my invention consists in the novel construction, arrangement and combination of parts herein shown and described, and more particularly pointed out in the claims.

In the drawing, wherein like reference characters indicate like or corresponding parts:

Fig. 1 is a perspective view of the spool;

Fig. 2 is a cross sectional view through the same showing the method of securing the ribbon, a portion of one end of the ribbon being shown;

Fig. 3 is a similar view showing the ribbon drawn out to the operative position it is normally in;

Fig. 4 is a perspective view of a portion of one end of a ribbon; and

Fig. 5 is a sectional view of a portion of the spool and ribbon and the mandrel or support upon which the same is mounted.

Referring to the drawing, it may be mentioned that in many machines a ribbon similar to a typewriter ribbon is employed which is moved back and forth under the printing mechanism so as to distribute the wear on the ribbon and have the same always uniformly and well inked.

My invention relates to a spool for the inked ribbon so employed, there being ordinarily one at each end of the ribbon. The spool shown consists of a tube of sheet metal cylindrical in shape and preferably of a gauge so that the same has some stiffness and is a closed spool as distinguished from a split or separable spool. The spool shown consists of the tube 1 which is preferably corrugated from end to end as indicated at 2 and provided with a slot or opening in the wall, as shown at 3. The slot 3 is disposed or located in one of the walls of the corrugation, it being ordinarily desired to locate it at the bottom thereof. The slot 3 is of the desired length depending upon the width of ribbon and is of comparatively narrow width so that the same substantially fits the thickness of the ribbon but with enough looseness to permit the end of the ribbon to be freely passed through the same. Arranged at the opposite side of the spool is an opening 4 which is generally of the same length as the slot 3 but of considerably greater width. There may also be provided the slots or openings 5—5 in the walls. The openings 5—5 compensate for the increased size of the slot 4, giving the spool better balance.

In positioning and securing a ribbon to the spool the same is passed through the slot 3 to the interior of the spool and out through the opening or slot 4, where it may be arranged at the end or provided with means for engaging the spool. As shown, 6 represents a ribbon, generally designated as an inked ribbon of the desired length and width, the width not exceeding the length of the slot 3 and the thickness less than the width of the slot 3. In applying and securing the ribbon to the spool, the end is projected through the opening 3 from the outside of the spool and passed through the spool and out through the slot 4. The free end is then provided with any suitable means for engaging the inner side of the spool at the slot 3 when the ribbon is drawn back as indicated in Fig. 3. In the construction shown the ribbon is folded or turned over at the end 7 as indicated at 8 to increase the thickness and it may be turned over one or more times as indicated at 8—9, the turned over end portion being secured to the body of the ribbon by eyelets 10, or by stitching or in an equivalent manner so that when the construction is complete the end designated generally as 7 will be of substantially greater thickness than the width of the slot 3. After the end has been so completed, the ribbon is withdrawn as indicated at Fig. 3, the enlarged thickened end preventing the complete withdrawal of the ribbon. As mentioned before, ordinarily two spools are employed, one at each end and the two ends are similarly arranged and constructed. The spools are carried by a shaft, support or mandrel 12 which is preferably formed with a groove 13 extending lengthwise to provide a clearance for the corrugation 2. The support 12 otherwise fits the interior of the

spool substantially close but with sufficient clearance to permit the ready application or removal of the spool from the support. The depression or recess 13 in support 12 is also made sufficiently large so as to receive the enlarged end of the ribbon at the interior of the spool. It will be obvious by referring to Fig. 5 that the spool cannot run free on the support 12 but must turn with it.

By making the spool of one piece without a split or open side the same is strong, durable and rigid. The inside diameter always corresponds with the diameter of the support so that the same may be easily applied or removed from the support. The same is economical to manufacture and it is easy and simple to assemble the parts.

Having thus described my invention, it is obvious that various immaterial modifications may be made in the same without departing from the spirit of my invention; hence I do not wish to be understood as limiting myself to the exact form, construction, arrangement and combination of parts herein shown and described, or uses mentioned.

What I claim as new and desire to secure by Letters Patent is:

1. A spool of the kind described consisting of a tube of integral construction provided with an internally disposed corrugation extending from end to end of the tube, and with a narrow slot at the bottom of the corrugation extending for a portion of the length of the tube between its ends, the tube having a second slot substantially the same length as the first slot but of relatively larger width.

2. A spool of the kind described consisting of a tube of integral construction provided with an internally disposed corrugation extending from end to end of the tube, and with a narrow slot at the bottom of the corrugation extending for a portion of the length of the tube between its ends, the tube having a second slot outside of the corrugation substantially the same length as the first slot but of relatively larger width.

3. A spool of the kind described consisting of a tube of integral construction provided with an internally disposed corrugation extending lengthwise of the tube from end to end and having a narrow slot through the wall of the corrugation extending for a portion of the length of the tube, said tube having a second slot through its wall at a point substantially diametrically opposite the first slot.

4. A spool of the kind described consisting of a closed integral tube provided with an internally disposed and regularly formed corrugation extending lengthwise of the tube from end to end and having a comparatively narrow slot through the wall of the corrugation extending for a portion of the length of the tube, said tube having a second slot of larger width than the first slot through its wall at a point substantially diametrically opposite the first slot.

5. A device of the kind described consisting of a tube of integral construction provided with an internally disposed corrugation extending from end to end of the tube, and with a narrow slot at the bottom of the corrugation extending for a portion of the length of the tube between its ends, the tube having a second slot outside of the corrugation substantially the same length as the first slot but of relatively larger width, a ribbon of a width less than the length of either of the slots and extending through the narrow slot, the ribbon provided with an end portion of a thickness greater than the width of the narrow slot whereby withdrawal of the ribbon through the slot is prevented.

6. A device of the kind described consisting of a tube of integral construction provided with an internally disposed corrugation extending from end to end of the tube, and with a narrow slot at the bottom of the corrugation extending for a portion of the length of the tube between its ends, the tube having a second slot outside of the corrugation substantially the same length as the first slot but of relatively larger width, a ribbon of a width less than the length of either of the slots and extending through the narrow slot, the end of the ribbon of a thickness greater than the width of the narrow slot whereby the withdrawal of the ribbon through the slot is prevented, the thickness of the end of the ribbon being less than the width of the second slot.

7. In a device of the kind described and in combination, a spool consisting of a metal tube cylindrical in shape with a continuous wall, said tube formed with an inwardly disposed corrugation extending from end to end of the tube and with a narrow slot in the wall of the corrugation extending to a point adjacent each end of the tube, a ribbon having its end inserted through said slot through the interior of the tube, the end of the said ribbon being folded over to increase the thickness thereof, and means for securing said folded over portion of the end to the body of the ribbon to maintain said increased thickness whereby withdrawal of the end of the ribbon through said slot is prevented.

8. In a device of the kind described and in combination, a spool consisting of a metal tube and cylindrical in shape with a continuous wall, said tube formed with an inwardly disposed corrugation extending from end to end of the tube and with a narrow slot in the wall of the corrugation extending to a point adjacent each end of the tube, a ribbon having its end inserted through said slot through the interior of the tube, the end of the said ribbon being folded over to increase the thickness thereof, and means for securing said folded over portion of the end to the body of the ribbon to maintain said increased thickness whereby withdrawal of the end of the ribbon through said slot is prevented, and a second slot through the wall of the tube, whereby the unturned end of the ribbon may be passed through both slots and the end turned over and secured and the ribbon then drawn back to an extent where the folded over end will engage the inner wall of the tube at said corrugation.

PAUL B. WEIS.