(No Model.)

H. J. GILCHER.

WRENCH.

No. 456,143. Patented July 21, 1891.

Fig. 5.

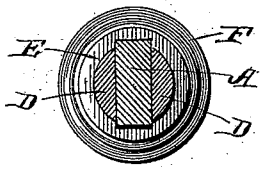

Fig. 1.

Fig. 4.

Fig. 2.

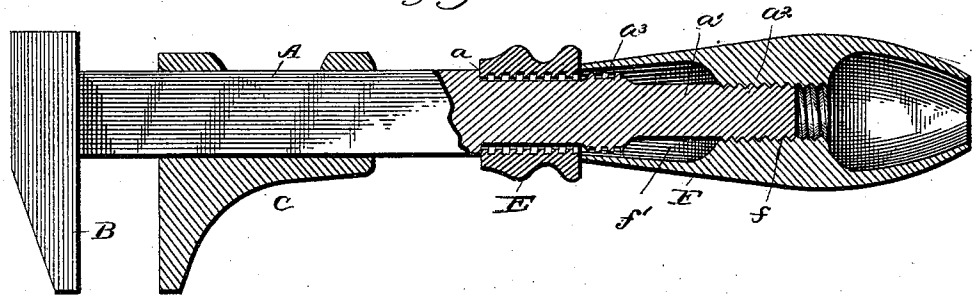

Fig. 3.

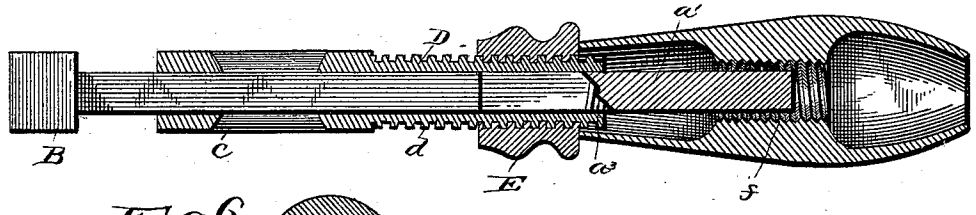

Fig. 6.

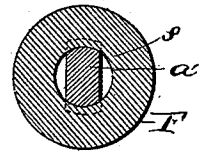

Witnesses

E. Wurdemann.

H. J. Riley

Inventor

By his Attorneys, Henry J. Gilcher

C. A. Snow & Co.

THE NORRIS PETERS CO., PHOTO-LITHO., WASHINGTON, D. C.

UNITED STATES PATENT OFFICE.

HENRY J. GILCHER, OF CLEVELAND, OHIO.

WRENCH.

SPECIFICATION forming part of Letters Patent No. 456,143, dated July 21, 1891.

Application filed September 25, 1889. Renewed June 18, 1891. Serial No. 396,665. (No model.)

To all whom it may concern:

Be it known that I, HENRY J. GILCHER, a citizen of the United States, residing at Cleveland, in the county of Cuyahoga and State of Ohio, have invented a new and useful Wrench, of which the following is a specification.

The invention relates to improvements in sliding-jaw nut-wrenches.

The object of the present invention is to simplify, improve, and cheapen the construction of sliding-jaw nut-wrenches and enable the lost motion or wear of the operating-nut to be readily taken up.

The invention consists in the construction and novel combination and arrangement of parts hereinafter fully described, illustrated in the accompanying drawings, and pointed out in the claim hereto appended.

In the drawings, Figure 1 is a perspective view of a wrench constructed in accordance with the invention. Fig. 2 is a longitudinal sectional view. Fig. 3 is a similar view taken at right angles to Fig. 2. Fig. 4 is a detail view of the sliding jaw detached from the shank. Fig. 5 is a cross-section through the shank and the threaded extension-plates. Fig. 6 is a cross-section through the handle.

Referring to the accompanying drawings by letter, A designates the shank constructed of suitable metal, and having at its upper end a stationary jaw B. The shank is rectangular at its upper half and has sliding upon it a jaw C, which has depending from its lower edge plates D, which are arranged upon each side of the shank and have their outer faces *d* curved and provided with threads, which are designed to be engaged by a nut E to operate the sliding jaw. The lower half of the shank is slightly reduced in size and forms shoulders *a*, against which the nut bears, whereby it is prevented sliding upward on the shank. The lower end of the shank is threaded and is adapted to engage an internally-threaded handle F, which is hollow and has intermediate of its ends an interior annular flange *f*, which is provided with threads to engage the lower end of the shank, and the upper end of the hollow handle is provided with a recess or concavity *f'* to receive the depending plates D, which have segments of threads, and when the jaws are spread or opened by the nut E the depending plates enter the concavity *f'* of the handle F. The lower half *a'* of the shank is provided about midway of the shoulder *a* and the threaded end a^2 with a threaded portion a^3, which serves to guide the operating-nut E upon the threaded depending plates D. The nut is prevented moving upward on the shank by the shoulders *a*, and the handle F engages the lower side of the nut and prevents it moving downward on the shank, and when the nut is turned it engages the threaded plates D and causes them to move along the shank, whereby the sliding jaw is adjusted. Should it be desired to tighten the nut to take up any lost motion or wear, it is only necessary to give the handle a turn and force it in contact with the lower edge of the nut.

From the foregoing description and the accompanying drawings the construction, operation, and advantages of the invention will be readily understood.

Having thus described my invention, what I claim is—

In a wrench, the combination of the shank provided with a stationary jaw and having threaded portions a^2 and a^3, said shank being provided with a shoulder *a*, located beyond the threads a^3, the sliding jaw having integral depending threaded plates arranged on each side of the shank, the operating-nut E, bearing against the shoulder *a*, and the hollow revoluble handle provided with the interior threaded portions *f* to engage the shank and having at its upper end a recess or concavity *f'* to receive the ends of the depending plates, said handle being arranged to bear against the operating-nut to take up wear, substantially as described.

In testimony that I claim the foregoing as my own I have hereto affixed my signature in presence of two witnesses.

HENRY J. GILCHER.

Witnesses:
VERNON H. BURKE,
ABNER SLUTZ.