(12) INTERNATIONAL APPLICATION PUBLISHED UNDER THE PATENT COOPERATION TREATY (PCT)

(19) World Intellectual Property Organization
International Bureau

(43) International Publication Date
14 March 2002 (14.03.2002)

PCT

(10) International Publication Number
WO 02/20375 A2

(51) International Patent Classification[7]: B65G

(21) International Application Number: PCT/US01/41989

(22) International Filing Date:
4 September 2001 (04.09.2001)

(25) Filing Language: English

(26) Publication Language: English

(30) Priority Data:
09/657,950 8 September 2000 (08.09.2000) US

(71) Applicants and
(72) Inventors: **CIMMIYOTTI, Jason** [US/US]; 155 Monte Cresta #304, Oakland, CA 94611 (US). **LIND, Peter, Michael** [US/US]; 1031 White Lane, St. Helena, CA 94574 (US). **MURRAY, Doug** [US/US]; 36 Gasner Drive, Novato, CA 94947 (US).

(74) Agent: **BERG, Michael, N.**; Finley & Berg, LLP, Suite 1940, 455 Market Street, San Francisco, CA 94105-2448 (US).

(81) Designated States *(national)*: AE, AG, AL, AM, AT, AU, AZ, BA, BB, BG, BR, BY, BZ, CA, CH, CN, CO, CR, CU, CZ, DE, DK, DM, DZ, EE, ES, FI, GB, GD, GE, GH, GM, HR, HU, ID, IL, IN, IS, JP, KE, KG, KP, KR, KZ, LC, LK, LR, LS, LT, LU, LV, MA, MD, MG, MK, MN, MW, MX, MZ, NO, NZ, PL, PT, RO, RU, SD, SE, SG, SI, SK, SL, TJ, TM, TR, TT, TZ, UA, UG, US, UZ, VN, YU, ZA, ZW.

(84) Designated States *(regional)*: ARIPO patent (GH, GM, KE, LS, MW, MZ, SD, SL, SZ, TZ, UG, ZW), Eurasian patent (AM, AZ, BY, KG, KZ, MD, RU, TJ, TM), European patent (AT, BE, CH, CY, DE, DK, ES, FI, FR, GB, GR, IE, IT, LU, MC, NL, PT, SE, TR), OAPI patent (BF, BJ, CF, CG, CI, CM, GA, GN, GQ, GW, ML, MR, NE, SN, TD, TG).

**Declaration under Rule 4.17:**
— *of inventorship (Rule 4.17(iv)) for US only*

**Published:**
— *without international search report and to be republished upon receipt of that report*

*For two-letter codes and other abbreviations, refer to the "Guidance Notes on Codes and Abbreviations" appearing at the beginning of each regular issue of the PCT Gazette.*

WO 02/20375 A2

(54) Title: RACKING SYSTEM FOR PLATFORM LOADED GOODS AND DISPENSING DEVICE FOR DISPENSING PLATFORM LOADED GOODS

(57) Abstract: A racking system for storing platform loaded goods is provided which comprises a rack and at least one locking mechanism. The rack has four sides, a base, and an upper surface adapted to receive a platform of platform loaded goods. The locking mechanism is moveable between a closed position in which the slide lock secures the platform of platform loaded goods onto the rack and an open position in which the slide lock does not impede the placement of the platform onto or removal of the platform form the rack. An activating mechanism for opening and closing the slide lock and a dispensing device for dispensing units of platform loaded goods onto a rack having a slide lock are also provided.

IN THE UNITED STATES PATENT AND TRADEMARK OFFICE

APPLICATION FOR PATENT

# RACKING SYSTEM FOR PLATFORM LOADED GOODS AND DISPENSING DEVICE FOR DISPENSING PLATFORM LOADED GOODS

## FIELD OF THE INVENTION

This invention relates generally to a racking system used to store and transport platform loaded goods and a dispensing device for dispensing platform loaded goods onto the racking system.

## BACKGROUND OF THE INVENTION

Many products on the market are sold loaded upon regularly-sized platforms. For example, pipette tips used for sample testing in laboratories are typically loaded into pipette tip flats so that the user need not handle the pipette tips individually. By utilizing platform loading, goods can be efficiently stored and transported in large quantities, as the platforms can be stacked and/or packaged one atop the other.

However, the characteristics of particular types of platform loaded goods may make it difficult to stack the platforms readily without the use of additional supporting structures. For example, conventional pipette tips, which have an enlarged

head and a conical lower portion tapering from the head, are stored in pipette tip flats having sets of apertures into which the pipette tips are placed, with the head of each pipette tip resting on the platform surface and the tapering conical body of the pipette tip extending below the flat. If a pipette tip flat loaded with pipette tips is placed upon a flat surface with no structure supporting the flat or pipette tips, gravity will cause the flat to fall, spilling the pipette tips from the flat. Accordingly, during handling of individual pipette tip flats, the flats are conventionally loaded into a pipette tip rack which supports the flat, accommodating the pipette tips by receiving their tapering conical bodies into a set of apertures.

The user will typically wish eventually to remove the goods from the supporting structure for use. In many cases, the user will also desire to remove the goods from the platform as well. For example, when processing pipette tips, an automated pipettor may be used to withdraw pipette tips from a flat loaded upon a pipette tip rack. A common problem encountered during this process is that the pipettor will lift the pipette tip flat along with the pipette tips. This can occur for a variety of

reasons; for example, the pipette tips may be slightly oversized in relation to the apertures formed in the pipette tip flat, such that friction between the pipette tips and pipette tip flat hold them together when the pipettor raises the pipette tips, or variances in the spacing between the apertures of the pipette tip flat and the pipettor may cause the pipette tips to frictionally engage the apertures of the pipette tip flat. The unintended withdrawal of the flat as well as the rack is highly undesirable as the presence of the flat will likely interfere the further processing of the pipette tips withdrawn by the pipettor and may result in the misalignment or spilling of other pipette tips also stored in the flat.

Even where it is not desired to remove the goods and/or platform from the supporting structure for further processing, it frequently will prove desirable to prevent inadvertent movement of irregularly sized goods on the platform after the goods are initially loaded onto the support. With pipette tip flats loaded onto conventional pipette tip racks, for example, if the rack is jarred or becomes tilted, the flat may slide along the surface of the rack, causing the pipette tips stored in the

flats to become misaligned with the apertures in the rack. This can lead to the tips skewing diagonally within the rack or falling out of the rack. The likelihood of inadvertent movement of the pipette tip flats on conventional racks may be increased where the flats and racks are used with automated equipment which may strike the flat and cause misalignments.

Avoiding misalignment and/or spillage of platform-loaded goods such as pipette tip flats can prove important for reasons beyond factors of convenience. Pipette tips, for example, are frequently used in the testing of fluid substances which may be rare, expensive, and/or difficult to obtain, and which if spilled cannot readily be reacquired for testing. Further, the fluid substances tested may be useless if contaminated by external matter, and may be hazardous to handlers (e.g. blood samples that may carry disease, or radioactive substances). Accordingly, maintenance of goods in desired positions on platforms loaded onto a racking system can prove critical.

Accordingly, some racking systems have been developed which provide structures which prevent the platform from being removed from the racking system

upon withdrawal of goods from the platform, and which decrease the likelihood of inadvertent movement of the platforms upon the racking system. For example, in U.S. Patent No. 5,642,816 to Kelly et al., a pipette tip rack is disclosed which features manually releasable latch mechanisms which may be elastically deformed to allow the placement of a pipette tip flat onto the rack and which, when released, snap back into a position which holds the flat on the rack. While the racking system described in the Kelly et al. patent is well adapted for manual use, the need to elastically deform the latch mechanisms makes the racking system difficult to manipulate with an automated system. Further, because the latch mechanisms are elastic, the racking system cannot remain in an unlocked position, i.e. with the latches open to receive a pipette tip flat, without constant pressure exerted upon the latching mechanisms.

Accordingly, an object of the present invention is to provide a rack having a locking device which allows a user easily to lock a platform onto the rack or to unlock the rack to introduce or remove a platform onto or from the rack.

A further object of the present invention is to provide a rack having a locking device which is readily operable either manually or using automated equipment.

Another object of the present invention is to provide a rack having a locking device which remains stable in both its locked and unlocked positions.

When racking systems are used to store irregularly shaped objects, it is particularly desirable to utilize devices which can automate the process of loading onto the racking system. Accordingly, it is a further object of the present invention to provide an automated dispensing device which can be used in conjunction with a rack having a locking device which allows a user easily to lock a platform onto the rack or to unlock the rack to introduce or remove a platform onto or from the rack.

Other objects and advantages of the present invention will become apparent when the inventive rack assembly and dispensing device are considered in conjunction with the accompanying drawings, specification and claims.

## SUMMARY OF THE INVENTION

A racking system for storing platform loaded goods is provided which comprises a rack and at least one locking mechanism. The rack has four sides, a base, and an upper surface. The upper surface is adapted to receive a platform of platform loaded goods. The at least one locking mechanism has an open and a closed position, such that in said open position said locking mechanism does not impede the placement of the platform onto or removal of the platform from the rack and in the closed position said locking mechanism secures the platform upon the rack. The locking mechanism is stable in both its open and its closed positions.

An activating mechanism is also provided for opening and closing a slide lock having an extruding boss and fitted within a rack such that the slide lock has an open and a closed position. The activating mechanism comprises a body forming a front surface and activating means formed on the front surface. When the rack is aligned with said front surface and the activating means and the rack is moved in relation to the activating means, the slide lock is moved by the activating means from its closed to its open position or from its open to its closed position.

A dispensing device is also provided for dispensing units of platform loaded goods from a stack of one or more units of platform loaded goods onto a rack having an upper surface and at least one slide lock operable to lock and unlock a unit of platform loaded goods on the upper surface. The dispensing device comprises storage means for storing the stack, release means controlling the storage means for releasing one of the units of platform loaded goods from the stack upon activation, and activating means for engaging the at least one slide lock. When the rack is aligned with the storage means and the rack is moved in relation to the activating means, the slide lock is moved by the activating means from its closed to its open position or from its open to its closed position.

## BRIEF DESCRIPTION OF THE DRAWINGS

Figure 1 is a perspective view of a preferred rack of the inventive racking system.

Figure 2 is a cross-sectional view of the rack of Figure 1.

Figure 3 is an exploded top plan view of one of four slots in the rack of Figure 1.

Figure 4 is a perspective view of a lid which may be used in conjunction with the rack of Figure 1.

Figure 5 is a perspective view of the rack of Figure 1 with slide locks having extruding bosses installed in the slots.

Figure 6 is a top perspective view of the slide lock of Figure 5.

Figure 7 is a bottom perspective view of the slide lock of Figure 5.

Figure 8 is a top plan view of the slide lock of Figure 5.

Figure 9 is a perspective view of the rack and slide locks of Figure 5 with a conventional pipette tip flat positioned atop it and the slide locks in an open, unlocked position.

Figure 10 is a perspective view of the rack, slide locks, and conventional pipette tip rack of Figure 9 with the slide locks in a closed, locked position.

Figure 11 is a perspective view of the rack and slide locks of Figure 5 with a pipette tip flat having upstanding wells positioned atop it and the slide locks in an open, unlocked position.

Figure 12 is a perspective view of the rack, slide locks, and pipette tip flat having upstanding wells of Figure 11 with the slide locks in a closed, locked position.

Figure 13 is a top plan view of the rack, slide locks, and pipette tip flat of Figure 11.

Figure 14 is a top plan view of the rack, slide locks, and pipette tip flat of Figure 12.

Figure 15 is a perspective view of an alternative rack having pairs of slots into which an alternative slide lock may be fitted.

Figure 16 is a perspective view of an alternative slide lock which may be fitted into the rack of Figure 15.

Figure 17 is a top plan view of the rack of Figure 15 with the alternative slide lock of Figure 16 installed in one pair of slots and moved into an open position.

Figure 18 is a top plan view of the rack of Figure 15 with the alternative slide lock of Figure 16 installed in one pair of slots and moved into an closed position.

Figure 19 is a top perspective view of a second alternative slide lock.

Figure 20 is a top plan view of the second alternative slide lock of Figure 19.

Figure 21 is a perspective view of a first swivel lock.

Figure 22 is a perspective view of an alternative rack within which the first swivel lock of Figure 21 is installed and pivoted to an open position.

Figure 23 is a perspective view of a second swivel lock.

Figure 24 is a perspective view of the alternative rack of Figure 22 within which four of the second swivel locks of Figure 23 have been installed, two pivoted into an open position and two pivoted into a closed position.

Figure 25 is a top perspective view of a preferred permanent platform which may be used in the inventive racking system.

Figure 26 is a bottom perspective view of the preferred permanent platform of Figure 25.

Figure 27 is an exploded bottom perspective view of one of four snaps in the permanent platform of Figure 25.

Figure 28 is a perspective view of the permanent platform of Figure 25 filled with pipette tips and installed on the rack of Figure 1.

Figure 29 is a front elevation view of an inventive activating mechanism used to open and/or close slide locks on the inventive rack, shown in conjunction with the rack and a slide lock.

Figure 30 is a side elevation view of the activating mechanism, rack, and slide lock of Figure 29.

Figure 31 is a front elevation view of the activating mechanism of Figure 29 in conjunction with an extruding boss of the slide lock when the rack and slide lock are moved to the bottom of the activating mechanism with the slide lock in the open position.

Figure 32 is a front elevation view of the activating mechanism and extruding boss of Figure 31 when the rack and slide lock are raised to a lower middle position with respect to the activating mechanism, wherein the slide lock has been moved to the closed position.

Figure 33 is a front elevation view of the activating mechanism and extruding boss of Figure 32 when the rack and slide lock are raised to an upper

middle position with respect to the activating mechanism, wherein the slide lock remains in the closed position.

Figure 34 is a front elevation view of the activating mechanism and extruding boss of Figure 33 when the rack and slide lock are raised to an upper position with respect to the activating mechanism, wherein the slide lock has been moved to the open position.

Figure 35 is a front elevation view of the activating mechanism and extruding boss of Figure 33 wherein the extruding boss is being moved to the closed position from the open position.

Figure 36 is a front elevation view of the activating mechanism and extruding boss of Figure 32 when the rack and slide lock have been lowered to the bottom of the activating mechanism with the slide lock in the closed position.

Figure 37 is a perspective view of an inventive dispensing device which may be used to deliver flats to a rack positioned on a platform assembly resting in its lowered position.

Figure 38 is a side view of the inventive dispensing device of Figure 37, with the rack positioned thereon, showing a stack of pipette tip

flats fitted within the dispenser of the dispensing device.

Figure 39 is a front view of the inventive dispensing device of Figure 37 with the rack positioned thereon.

Figure 40 is a lower perspective view of the inventive dispensing device of Figure 37, with clamshells used to protect the dispenser shown in a manually raised position to display the underside of the dispenser.

Figure 41 is a perspective view of the inventive dispensing device of Figure 26 when the platform assembly has been raised through action of a lever assembly to the level of the dispenser.

## DESCRIPTION OF THE PREFERRED EMBODIMENT

Figures 1-17 show preferred embodiments of an inventive rack, pipette tip platform, and pipette tip flat which may be utilized in conjunction with the inventive dispensing device. It should be understood, however, that the inventive rack, platform, and flat can be used independently of the inventive dispensing device, and that the inventive dispensing device may be utilized with tip racks,

platforms and/or flats other than the inventive tip rack, platform, and flat.

Referring to Figure 1, a preferred rack **10** is shown. Rack **10**, which is generally rectangular, has opposing long sides **12**, opposing short sides **14**, a upper surface **16** and a bottom **18**. The upper surface **16** of rack **10** defines a grid of regular, rectangular apertures **20** each suitably sized for passage of the lower end of a pipette tip therethrough. Referring to Figures 1 and 2, bottom **18** is solid, and apertures **20** are formed by walls **22**, each of which extends vertically from upper surface **16** to bottom **18**. Accordingly, each aperture **20** forms a channel **24** extending from upper surface **16** to bottom **18** and closed by bottom **18**, such that when pipette tips are fitted into apertures **20**, no openings exist between apertures **20** through which cross-tip contamination may occur.

Referring to Figure 1, sides **12** and **14** preferably form a recessed upper portion **26** and widened lower portion **28** such that a lid **30** (such as that shown in Figure 4) may be fitted over the upper portion **26** of the rack **10** with the sides **31** of the lid **30** generally flush with lower portion **28**. Upper portion **26** extends upwardly to form a raised lip **32**

around the perimeter of the upper surface **16** except at recesses **34** along long sides **12**. Lip **32** is sized such that pipette tip flats used in conjunction with the rack **10** fit within a close tolerance within the inner periphery of lip **32** when placed onto the rack **10**, such that the lip **32** may be used as a guide to position flats correctly on the rack **10**. Preferably, lip **32** extends above the upper surface **16** by an amount approximately equal to the thickness of the pipette tip flats, such that when the flat is placed on the rack **10**, the upper surface of the flat will be flush with the lip **32**. Recesses **34** are provided such that when a flat is positioned on the rack, the edges of the flat will extend past the upper surface **16** of the rack above recesses **34**, providing convenient access points for human users or automated systems to grasp the edges of the flats when fitting them onto or removing them from the rack **10**, while lip **32** prevents the flats from simply sliding horizontally off the rack **10**. Lip **32** preferably forms thick portions along short sides **14**, within which slots **36**, shown in more detail in Figure 3, are formed.

In the preferred embodiment of the rack **10**, one or more locking mechanism are utilized in

conjunction with rack **10** to allow a user to successively lock and release pipette tip flats on the rack **10**. In a first embodiment, the locking mechanisms used comprise slide locks **40**, shown installed in the rack **10** in Figure 5 and in isolation in Figures 6 through 8. Slide locks **40** each have an L-shaped main body **42** forming a locking projection **44** at one end, snaps **46** and **48** (see Figures 6 and 7) downwardly projecting from the main body **42**, and an extruding boss **50** forming a handle for the main body **42**. Snap **46** is formed at the opposite end of the main body **42** from the locking boss **44**, and snap **48** is positioned at a distance **d** (see Figure 7) from snap **46** which is less than the length of slots **36** in lip **32** of rack **10** (see Figure 5). Extruding boss **50** is preferably positioned between snaps **46** and **48**.

Figures 9 through 14 depict rack **10** with a pipette tip flat **60** fitted thereon. Flat **60** is sized to fit just within lip **32** when fitted onto rack **10**. Figures 9 and 10 show rack 10 used with a conventional pipette tip flat, while Figures 11-14 show rack 10 used with an alternative pipette tip flat which includes a set of upstanding wells **62** which correspond to and register with the set of

apertures **20** formed in the upper surface **16** of rack **10**. Wells **62** are sized such that conventional pipette tips **64** inserted into wells **62** will rest within wells **62**: the enlarged head portion of the tip **64** rests upon or within the well **62** as shown in Figures 9 and 10 and the lower portion of the pipette tip extends through the flat **60** and into the channel **22** (see Figure 2) formed by the aperture 20 (see Figure 1) corresponding to the well **62**.

Referring to Figure 5, when slide locks **40** are used in conjunction with rack **10**, a slide lock **40** may be fitted into each slot **36** of rack **10** by fitting snaps **46** and **48** of the slide lock **40** into the slot **36**. The outwardly flaring projections **52** (see Figure 6) at the bottom of each snap **46** and **48** prevent the removal of the slide locks **40** from slots **36**, locking the slide locks **40** into the slots **36**. Slide locks **40** should be inserted into slots **36** such that the locking projection **44** of each slide lock **40** is positioned proximate a long side **12** of the rack and the extruding boss **50** is extending outwardly away from the rack **10**, as shown. Because the distance **d** between each two snaps **46** and **48** is less than the length of the slot **36**, each slide lock **40** can slide laterally within its slot **36**.

It should be understood that alternative embodiments of the rack **10** and slide locks **40** may be used in which the slide locks **40** are not snapped into the rack and may be inserted into and removed from the rack using simple procedures. For example, in the alternative rack **10A** shown in Figure 15, four pairs of slots **36A** are provided into which an alternative slide lock **40A** shown in Figure 16 may be fitted. Each slot in the pairs of slots **36A** form T-shaped apertures with enlarged head portions **37** into which downwardly extending T-profiles **41** of alternative slide locks **40A** may be fitted. The spacing between the enlarged head portions **37** of each slot in each pair of slots **36A** should be approximately equal to the spacing between the T-profiles of each slide lock **40A** such that both T-profiles may simultaneously be inserted into the enlarged head portions **37** of a pair of slots **36A**. Enlarged foot portions **43** of the T-profiles **41** prevent removal of the slide locks **40A** from the slots **36A** except at enlarged portions **37**. After insertion of a slide lock **40A** into a pair of slots **36A**, a removable stopper (not shown) may be fitted into enlarged head portions **37** to prevent the accidental removal of the slide lock **40A** from the

pair of slots **36A**, if desired. Alternative slide locks **40A** will then slide within pairs of slots **36A** between an open position (shown in Figure 17) and a closed position (shown in Figure 18), and will function in the manner described in relation to slide locks **40**.

Referring back to Figures 5, 9, and 13, when each slide lock **40** is moved to an outward position, as shown, their locking projections **44** do not impede placing a flat **60** upon or removing a flat **60** from the rack **10**. Conversely, when each slide lock is moved to an inward position, as shown in Figures 10, 12, and 14, their locking projections **44** will each extend over the surface of a flat **60** positioned upon the rack **10**, locking the flat **60** in place on the rack **10**.

Extruding bosses **50** are preferably provided on slide locks **40** to facilitate the movement of the slide locks **40** between their outer and inward positions by the inventive dispensing system as will be discussed below. However, it should be understood that alternative structures on the slide locks **40** and/or dispensing system may be utilized to automate movement of the slide locks **40**.

For example, referring to Figures 19 and 20, alternative slide locks **40B** may be used which do not include extruding bosses **50** extending outwardly from the sides of rack **10**. This may be desired to streamline rack **10**, for example, to allow a lid such as lid **30** (see Figure 4) to be fitted over rack **10** while the alternative slide locks **40B** are in place. It should be understood, however, that a rack **10** using slide locks **40** with extruding bosses **50** could be fitted with a lid (not shown) designed to accommodate bosses **50**. Slide locks **40B** may be opened and closed manually, such as by gripping body **42** or locking projections **44** in the fingers and sliding the slide locks **40B**, or using an automated device capable of sliding the slide locks **40B** without the extruding boss **50**, such as by engaging the body **42** or locking projections **44** with an automated gripper and sliding the slide locks **40B**.

It should also be understood that locking mechanisms other than slide locks **40**, **40A**, or **40B** may be utilized. For example, Figure 21 depicts a first swivel lock **500** which may be used to hold a flat **60** onto a slightly modified rack **10B**. First swivel lock **500** includes a downwardly extending pin **502** which may be press fitted into a corresponding

aperture **503** in rack **10B**, as shown in Figure 22, such that the pin **502** is rotationally pivotable within the aperture **503**. First swivel lock **500** has a head portion **504** and a tail portion **506** such that when the tail portion **506** is rotated to be adjacent to the side of the flat, head portion **504** does not project over the flat, as shown in Figure **22**. This constitutes the open position of the first swivel lock. To move the swivel lock to the closed position, the head portion **504** is rotated over the flat, moving the tail portion **506** away from the edge of the flat. In the closed position, head portion **504** thus secures the flat atop the rack **10B**.

As another example, Figure 23 depicts a second swivel lock **510** which may be utilized as a locking mechanism with rack **10B**. Like first swivel lock **500**, second swivel lock **510** has a downwardly extending pin **512** which may be press fit into aperture **503** such that the pin **510** is rotationally pivotable within the aperture **503**. The body of second swivel lock **510** comprises a bar **514** with legs extending horizontally away from pin **512**. As shown in Figure 24, second swivel locks **510** may be pivoted into open position **516**, in which bars **514** of swivel locks **510** parallel the edge of the flat fitted upon

rack **10B**, or into closed position **518**, in which a leg of bars **514** extends over the upper surface of the flat.

It should further be understood that the described racks **10**, **10A**, and **10B** could be utilized in conjunction with platforms other than standard pipette tip flats **60**. For example, a preferred permanent platform **90** for receiving pipette tips is shown in Figures 25, 26, and 28 which may be locked onto rack **10**. Permanent platform **90** has an outer contour which matches the outer contour of lip **32** of rack **10**, such that it may be fitted onto rack **10** with its outer edges flush with upper portion **26**, as shown in Figure 25. Accordingly, lid **30** (see Figure 4) may be fitted over rack **10** while permanent platform **90** is in place. Referring to Figure 25, permanent platform **90**, like flat **60**, includes a set of upstanding wells **92** on its upper surface which correspond to and register with the set of apertures **20** (see Figure 1) formed in the upper surface **16** of rack **10**. Referring to Figure 26, the lower surface of permanent platform **90** preferably forms walls **94** which register with walls **22** (see Figures 1 and 2) of rack **10** when permanent platform **90** is properly positioned on rack **10**. The lower surface of

permanent platform **90** also forms snaps **96** which register with slots **36** (see Figure 1) of rack **10** when the platform **90** is properly positioned on rack **10**. Referring to Figures 25 through 28, when permanent platform **90** is fitted onto rack **10**, snaps **96** are inserted into slots **36** (see Figure 1). Outwardly flaring projections **99** on snaps **96** (see Figure 27) will then hold permanent platform in place on rack **10**.

It also should be understood that rack **10** may be used as a support for pipette tips without either slide locks **40** or permanent platform **90**; for example, rack **10** could be used in conjunction with standard pipette tip flats or platforms without using locking structures. Further, rack **10**, flat **60** and platform **90** can each be adapted to store pipette tips in a configuration other than the conventional 8 x 12 rectangular configuration shown; each can be altered to house any number of pipette tips of any size in any spatial configuration.

Conversely, it also should be understood that rack **10** and platform **90** may be adapted to receive platforms of goods other than pipette tips. In that case, rack **10** can utilize slide locks **40** in the described fashion to successively lock and unlock

platforms storing those goods on the rack. The adapted permanent platform **90** can be installed on the adapted rack **10** utilizing the same slot and snap structures on the rack and platform, respectively, as described.

Figures 29-36 depict a preferred activating mechanism **200** which can be used in conjunction with a rack **10** having slide locks **40** with extruding bosses **50** in loading and/or unloading flats or platforms from the rack **10**. As is most clearly shown in Figures 29 and 30, activating mechanism **200** has a body **202** forming a trapezoidal upper portion **204** having sides **204A** and **204B** and a rectangular lower portion **206** having side **206A**. An upper projection **208** and a lower projection **210** extend outwardly from one side of body **202**. Projection **208** includes side faces **212** and **214** (**214** shown in Figure 29 only), and projection **210** includes side faces **216** and **218**.

Figures 29 and 30 show the preferred alignment of the rack **10** with the activating mechanism **200** just prior to use of the activating mechanism **200**. Rack **10** is positioned such that side **12** of rack **10** aligns with a side **206A** of the activating mechanism (see Figure 29). Extruding boss **50** projects towards

body **202** of activating mechanism **200** from side **14** of rack **10** and is positioned below projections **208** and **210** (see Figure 30). In use, as shown in stages in Figures 31-36, rack **10** and activating mechanism **200** are moved with respect to one another such that extruding boss **50** successively contacts the faces **218, 214,** and **216** of the projections **208** and **210** as will be described. This can be accomplished, for example, by raising and lowering the rack **10** with respect to the activating mechanism **200,** lowering and raising the activating mechanism **200** with respect to the rack **10,** or a combination thereof. For purposes of discussion, it shall be assumed that the rack **10** is raised and lowered with respect to the activating mechanism **200.**

For clarity of illustration, in Figures 31-36 the extruding boss **50** of the slide lock **40** is shown in isolation from lock **40** and rack **10** to show the movement of the extruding boss **50** as it encounters faces **218, 214,** and **216.** However, it should be understood that during those movements, extruding boss **50** remains integral with or connected to slide lock **40,** which is fitted into rack **10,** as shown in Figures 29 and 30.

In the following description it is assumed that when the rack **10** is moved upwardly into contact with activating mechanism **200**, slide locks **40** are in their open position, as shown in Figure 29 and described previously. In this position, the outer edge of extruding boss **50** is at a distance **d1** from edge **12** of rack **10**. Referring to Figure 31, as rack **10** is raised, extruding boss **50** comes into contact with face **218** of projection **210**. As side **12** of rack **10** is maintained approximately in alignment with side **206A** (see Figure 29) during the procedure, the outer edge of extruding boss **50** will accordingly be at distance **d1** from side **206A** at the time of contact. As rack **10** is further lifted, face **218** propels extruding boss **50** (and accordingly slide lock **40**) in the direction indicated by arrow **A** until extruding boss **50** reaches the position indicated in Figure 32. At this point, the outer edge of extruding boss **50** is at a distance **d2** from side **206A**. Distance **d2** (as determined by the length and angle of face **218**) should be chosen such that slide lock **40** is in its closed position when boss **50** is at distance **d2** from side **206A**. Accordingly, in the depicted embodiment of the rack **10** wherein side **12** of rack **10** is aligned with side **206A** during

operation (see Figure 29), the movement of extruding boss **50** causes slide lock **40** to slide within the slot of rack **10**, until boss **50** is at distance **d2** from side **12** (as well as side **206A**).

It should be understood that if slide lock **40** is in its closed position when rack **10** is raised to meet activating mechanism **200** (see, for example, Figure 36), extruding boss may be raised to the position shown in Figure 32 without contact with face **218**. Similarly, if slide lock **40** is between its open and closed positions when rack **10** is raised, extruding boss **50** will simply contact face **218** at a higher point and moved to the position shown in Figure 32 in the described manner.

Accordingly, as described, face **218** acts to ensure that the slide locks **40** of the rack **10** are in a closed position when the extruding boss **50** (and accordingly rack **10**) is raised to the level shown in Figure 32. This ensures that when the rack **10** is raised further, extruding boss **50** has been moved out of the path of the portion of projection **210** providing face **216**. Further, this allows the activating mechanism **200** to be used, for example, in an automated system to bring slide locks **40** to their closed position. The automated system can bring the

rack **10** below the activating mechanism **200**, raise the rack to the position shown in Figure 32, and then lower the rack.

If the rack **10** is raised further in relation to activating mechanism **200**, extruding boss **50** will come into contact with face **214** of projection **208**, as shown in Figure 33. At this point, the outer edge of the extruding boss remains at distance **d2** from side **206A**, as shown. As rack **10** is lifted, face **214** moves extruding boss **50** in the direction indicated by arrow **B**, until it reaches the position shown in Figure 34. At this point, extruding boss **50** has returned to its position at distance **d1** from side **206A**, and accordingly slide lock **40** is in its open position. Accordingly, at this point a flat or platform positioned on rack **10** can be removed, or a rack or flat can be introduced onto rack **10**.

If desired, the rack **10** can then be moved away from activating mechanism **200**, leaving slide locks **40** in the open position. This may be desirable, for example, where an automated system is used to remove a platform from the rack **10** at the position shown in Figure 34, and the empty rack, unlocked, is then moved by the automated system to another station at which a new platform is to be added to the rack **10**.

However, it may also be desirable to close slide lock **40** after processing of the rack at the position shown in Figure 34. For example, if a new flat is introduced onto the rack, it will frequently be preferable to close slide lock **40** prior to horizontal movement of rack **10** away from activating mechanism **200**. This may be accomplished using the activating mechanism **200** simply by lowering rack **10**. As shown in Figure 35, extruding boss **50** will contact face **216** (with boss **50** still at distance **d1** from side **206A**), and as rack **10** is further lowered, face 216 will move extruding boss in the direction indicated by arrow **C** back to the position shown in Figure 32, in which extruding boss 50 is at distance **d2** from side **206A**, and accordingly, the slide lock **40** is in its closed position. As the rack **10** is lowered to the bottom of the activating mechanism **200**, as shown in Figure 36, extruding boss **50** remains at distance **d2** from side 206A, and accordingly slide lock **40** remains in its locked position.

Where rack **10** utilizes four slide locks **40**, as shown, each slide lock **40** may be opened and/or closed simultaneously using a set of four activating mechanisms **200** aligned on the same horizontal plane,

as will be described in relation to the preferred embodiment of the inventive dispensing device as follows. It should be understood that any number of slide locks **40** on rack **10** may be manipulated in this manner by activating mechanisms **200** as long as activating mechanisms **200** are positioned accordingly.

With respect to the preferred embodiment of the inventive dispensing device, in the following discussion it will be assumed that the inventive dispensing device is being used to deliver preferred pipette tip flats **60** onto preferred rack **10** into which slide locks **40** have been fitted, unless otherwise stated. However, it should be understood that the inventive dispensing device can be used to process flats and platforms of any type, including but not limited to permanent platforms **90**, onto racks of any type suitable to receive the flats or platforms being processed. The processed platforms or pipette tip flats may house any number of pipette tips of any size in any spatial configuration. Further, the inventive dispensing device may be used to process units of any platform-loaded goods, and not only pipette tip flats. In this regard, the term "units of platform-loaded goods" as used herein shall

include platforms upon which goods of any sort are loaded, as well as goods which themselves constitute platforms, such as microplates, or microplate lids.

Referring to Figures 37 through 41, a preferred embodiment **100** of the inventive platform dispensing device is shown used in conjunction with rack **10** and slide locks **40**. Device **100** primarily comprises a dispenser **102** and a liftable platform assembly **104**. Dispenser **102** holds one or more stacked pipette tip flats **60** as shown in Figure 38 and, upon activation, will deliver the lowermost flat **60** onto a pipette tip rack **10** positioned on platform assembly **104**, as described in further detail below.

Both dispenser **102** and liftable platform assembly **104** are preferably mounted upon a wall-mountable base **106**, as wall mounting is particularly useful in laboratory work where conservation of countertop space is highly desirable. Base **106** may readily be fastened to a wall by fitting fasteners such as screws through apertures formed at various positions around the base **106**. However, it should be understood that dispenser **102** and liftable platform assembly **104** may be combined to form a stand-alone device in a variety of ways, including but not limited to modifying base **106** to include supporting

surfaces allowing it to rest on a supporting surface such as a table or counter.

Dispenser **102** is positioned above platform assembly **104**. While dispenser **102** may be attached to housing **106** using fasteners or the like, or may be formed integrally therewith, dispenser **102** is preferably fixed to a spacer **108** which is in turn fixed to base **106**.

Dispenser **102** primarily comprises a platform engaging and releasing structure **110** which may be used successively to release stacked pipette tip flats (see Figure 38) upon activation. Platform engaging and releasing structure **110**, which is extensively described in commonly owned U.S. Patent Application Serial No. 09/483,384 (hereinafter "the '384 application), hereby incorporated by reference, may be activated to release a flat when blade ends **112** (denoted by reference numeral **102** in the '384 application), shown in Figure 40, are moved upwardly. It should be noted that platform engaging and releasing structure **110** may be oriented as desired in relation to base **106**. For example, the sides incorporating blade ends **112** may be parallel to base **106**, as shown in Figure 37-41, or perpendicular to

the base, as shown in Figure 3 of the '384 application.

Dispenser **102** preferably includes a structure fixed to or resting upon the upper surface of platform engaging and releasing structure **110** which assists users in inserting and maintaining pipette tip flats **60** in a stacked formation, as shown in Figure 38. In Figures 37 to 41, a preferred flat guide **114** is shown which includes two opposing U-shaped side supports **116** and a front panel **118** forming an elongated oval window **120**. Supports **116** are spaced such that a distance slightly greater than the width of a flat **60** separates them. The inner openings in supports **116** and window **120** allow users to view from the sides and top of the dispenser **102**, respectively, the number of flats **60** remaining within the dispenser **102**. Openings **116** also provide a convenient access point at which the user can manually access flats **60** after they are loaded into the dispenser. This can prove particularly useful where the flats **60** are initially introduced into the dispenser **102** within packaging which the user must or desires to remove from the dispenser **102** prior to dispensing of the flats. It should be understood, however, that the dispenser may utilize alternative

or additional guiding structures, or may be used without a guiding structure. As an example of an alternative guiding structure, the dispenser **102** could include the guide described in the '384 application (reference numeral **80** therein).

As shown in Figures 40 and 41, four of the previously described activating mechanisms **200** extend downwardly from the corners of platform engaging and releasing structure **110** below blade ends **112**. Activating mechanisms **200** are used to open the slide locks **40** of a rack **10** positioned below the dispenser **102** and raised up to the dispenser to receive a flat **60**, as will be described in more detail below.

Dispenser **102** preferably also includes clamshells **122**, which may be closed below activating mechanisms **200** and the underside of platform engaging and releasing structure **110**, as shown in Figures 37 through 28, and opened such that each clamshell moves to the sides of platform engaging and releasing structure **110**, as shown in Figures 40 and 41. Clamshells **122**, pivot about pins **124** fitted upon platform engaging and releasing structure **110**. The use of spacer **108** creates a gap between platform engaging and releasing structure **110** and base **106** within which clamshells 122 can rotate. Clamshells

**122** preferably remain closed when the device **100** is not in operation, and are opened when a rack **10** is raised up to dispenser **102**, as will be described below. Clamshells **122** protect the platform engaging and releasing structure **110** and any flats **60** resting within from contamination between dispensing actions.

Referring to Figures 37-41, platform assembly **104** includes a platform **130** designed to receive a rack **10**. Platform **130** preferably includes guides such as pins **132** on its supporting surface **131** to indicate the desired positioning of the rack **10** on the platform **130** for proper dispensing. If clamshells **122** are utilized in dispenser **102**, platform **130** preferably includes a rear panel **134** having a triangular upper face.

Platform **130** is mounted on a track **136** in a conventional manner such that the entire platform **130** can be smoothly raised and lowered between a rest position (shown in Figures 37 through 39) and a raised position (shown in Figure 41). In addition to supporting surface **131**, a lower panel **138** is preferably included which extends downwardly from the rear edge of platform **130** which increases the length of the section fitted upon track **136**, as well as side supports **140** which provide structural support for

platform **130**. Supporting surface **131**, lower panel **138**, and side supports **140** may be made together as one piece or may be assembled together from separate pieces as desired.

A lever assembly **142** is preferably included which allows one-handed operation of the platform assembly **104** to raise and lower platform **130**. Side supports **144** fixed at their rear edges to base **106** provide inwardly extending pins **146** to which arms **148** of lever **150** are pivotably attached. Arms **148** include slots **152** in their rearmost ends into which pins **154** extending from flanges extending from panel **138** extend.

In operation, when no force is applied to lever assembly **142**, the weight of platform **130**, which is applied to the rearward ends of arms **148** of lever **150** at pins **154**, causes platform **130** to remain in its lowermost position on track **136**, maintaining lever **150** in the elevated position shown in Figures 37 through 39. When lever **150** is grasped and lowered, arms **148** pivot about pins **146**, raising the rearward ends of arms **148**, applying upward pressure to pins **154**, thereby causing platform **130** to be raised along track **136**. As arms **148** move rotationally about pins **146** while platform **130** moves vertically, slots **152**

allow pins **154** to slide within arms **148** to accommodate the differences which accrue in their horizontal displacement during this movement. As platform **130** is raised, the triangular upper section of panel **134** engages the rear edge of clamshells **122**, causing clamshells **122** to lift and separate, until the entire platform assembly reaches the configuration shown in Figure 41.

The positioning of activating mechanisms **200** is chosen such that when a rack **10** having slide locks **40** is fitted below the dispenser **102** on platform **130**, the extruding bosses **50** of slide locks **40** on rack **10** will engage activating mechanisms **200** as described previously in relation to Figures 29 through 36 when platform **130** is raised to the position shown in Figure 41. Accordingly, in the position shown in Figure 41, slide locks **40** on rack **10** will have been moved to their open position regardless of their starting position when the rack is first placed upon platform **130**. In their open position, slide locks **40** will engage and lift the blade ends **120** (see Figures 40 and 41) of the platform engaging and releasing structure **110** once the slide locks become elevated above activating mechanisms **200**, causing dispenser **102** to release a flat **60** onto the unlocked rack **10**.

When lever **150** is then lowered, extruding bosses **50** of slide locks **40** again engage activating mechanisms 200, moving slide locks **40** to their closed position and locking the flat **60** on the rack **10**.

It should be understood that the inventive rack assembly and activating mechanisms may be utilized with many different dispensing and/or transport mechanisms. For example, rack **10** may be used in place of the tip depot of an automated system described in commonly owned U.S. Patent Application Serial No. 09/158,756, hereby incorporated by refèrence. That automated system may be adapted such that its mobile pick-up unit (reference numeral **44** therein) replaces activator pins used to lock and unlock the described tip depot with activating mechanisms **200** positioned to open and close slide locks on the rack **10**.

Although the foregoing invention has been described in some detail by way of illustration for purposes of clarity of understanding, it will be readily apparent to those of ordinary skill in the art in light of the teachings of this invention that certain changes and modifications may be made thereto without departing from the spirit or scope of the appended claims.

IT IS CLAIMED:

1. A racking system for storing platform loaded goods, comprising:

a rack, said rack having four sides, a base, and an upper surface, said upper surface adapted to receive a platform of platform loaded goods;

a locking mechanism having an open and a closed position, such that in said open position said locking mechanism does not impede the placement of said platform onto or removal of said platform from said rack and in said closed position said locking mechanism secures said platform upon said rack, said locking mechanism stable in both its open and its closed positions.

2. The racking system of claim 1 wherein said upper surface of said rack forms at least one swivel aperture and wherein said locking mechanism comprises a swivel lock rotatably securable within said at least one swivel aperture.

3. The racking system of claim 1 wherein said upper surface of said rack forms at least one slot and wherein said locking mechanism comprises a slide

lock slidably securable within said at least one slot.

4. The racking system of claim 3, wherein said slide lock comprises an extruding boss which extends outwardly from said rack when said slide lock is slidably secured in said rack.

5. The racking system of claim 1, wherein said rack is adapted to store pipette tip flats, and wherein said upper surface of said rack forms a set of apertures designed to register with a set of pipette tips fitted into said pipette tip flats.

6. The racking system of claim 5, further including a permanent platform, said permanent platform having an upper surface forming a set of upstanding wells aligning with said set of apertures in said upper surface of said rack, said permanent platform having at least one downwardly extending snap which may be inserted into said at least one slot in said upper surface of said rack to lock said permanent platform onto said rack.

7. The racking system of claim 1, wherein at

least one recess is formed in at least one of said sides of said rack such that when said platform is positioned on the rack, at least one edge of said platform will extend past the upper surface of said rack above said recess.

8. An activating mechanism for opening and closing a slide lock having an extruding boss and fitted within a rack such that said slide lock has an open and a closed position, the activating mechanism comprising:

a body forming a front surface;

activating means formed on said front surface such that when said rack is aligned with said front surface and said activating means and said rack is moved in relation to said activating means, said slide lock is moved by said activating means from its closed to its open position or from its open to its closed position.

9. The activating mechanism of claim 8 wherein said activating means comprises at least one projection extending outwardly from said front surface of said body, said projection defining at least one diagonally extending face such that when

said rack is moved upwardly in relation to said body from a position below said body and said extruding boss is aligned with said projection, contact with said face will move said extruding boss such that said slide lock moves from its closed position to its open position.

10. The activating mechanism of claim 9, wherein said at least one projection is a first, upper projection, and wherein said activating means further comprises at least a second, lower projection extending outwardly from said front surface of said body, said lower projection defining second and third diagonally extending faces, said second face positioned below said third face, such that when said rack is moved upwardly in relation to said body from a position below said body and said extruding boss is aligned with said second lower projection, contact with said second face on said lower projection will move said extruding boss such that said slide lock moves from its open position to its closed position, and when said slide lock is in its open position and said rack is moved downwardly in relation to said body from a position above said body and said extruding boss is aligned with said

upper and lower projections, contact with said third face on said lower projection will move said extruding boss such that said slide lock moves from its open position to its closed position.

11. The activating mechanism of claim 10 wherein said activating means comprises at least one projection extending outwardly from said front surface of said body, said projection defining at least one diagonally extending face such that when said rack is moved upwardly in relation to said body from a position below said body and said extruding boss is aligned with said projection, contact with said face will move said extruding boss such that said slide lock moves from its open position to its closed position.

12. A dispensing device for dispensing units of platform loaded goods from a stack of one or more units of platform loaded goods onto a rack having an upper surface and at least one locking mechanism operable to lock a unit of platform loaded goods on said upper surface when said locking mechanism is in a closed position and to unlock said unit of platform loaded goods when said locking mechanism is in an

open position, the dispensing device comprising:

storage means for storing said stack;

release means controlling said storage means for releasing one of said units of platform loaded goods from said stack upon activation;

activating means for engaging said at least one locking mechanism such that when said rack is aligned with said storage means and said rack is moved in relation to said activating means, said locking mechanism is moved by said activating means from its closed to its open position or from its open to its closed position.

13. The dispensing device of claim 12 wherein said at least one locking mechanism comprises a swivel lock.

14. The dispensing device of claim 12 wherein said at least one locking mechanism comprises a slide lock.

15. The dispensing device of claim 14 wherein said slide lock of said rack forms an extruding boss, and wherein said activating means comprises a downwardly extending body having a front surface and

at least one projection extending outwardly from said front surface, said projection defining at least one diagonally extending face such that when said rack is moved upwardly in relation to said body from a position below said body and said extruding boss is aligned with said projection, contact with said face will move said extruding boss such that said slide lock moves from its closed position to its open position.

16. The dispensing device of claim 15 wherein said at least one projection is a first, upper projection, and wherein said activating means further comprises at least a second, lower projection extending outwardly from said front surface of said body, said lower projection defining second and third diagonally extending faces, said second face positioned below said third face, such that when said rack is moved upwardly in relation to said body from a position below said body and said extruding boss is aligned with said second lower projection, contact with said second face on said lower projection will move said extruding boss such that said slide lock moves from its open position to its closed position, and when said slide lock is in

its open position and said rack is moved downwardly in relation to said body from a position above said body and said extruding boss is aligned with said upper and lower projections, contact with said third face on said lower projection will move said extruding boss such that said slide lock moves from its open position to its closed position.

17. The dispensing device of claim 12 further comprising at least one set of clamshells pivotably fixed below said storage means.

18. The dispensing device of claim 12 further comprising a platform designed to receive said rack, and lifting means for lifting said platform between a lower and an upper position, such that in said upper position said release means releases a unit of platform loaded goods onto said rack, and such that when said platform is lifted from its lower to its upper position, said activating means engages said locking mechanism on said rack to move said locking mechanism from its closed to its open position.

19. The dispensing device of claim 18 wherein said lifting means includes a lever assembly which

is manually operable by a user to raise and lower said platform using one hand.

20. The dispensing device of claim 18 wherein said activating means comprises at least one portion for moving said at least one locking mechanism from its closed to its open position and at least one portion for moving said locking mechanism from its open to its closed position, and wherein when said platform is lowered from its upper to its lower position, said activating means engages said at locking mechanism on said rack to move said locking mechanism from its open to its closed position.

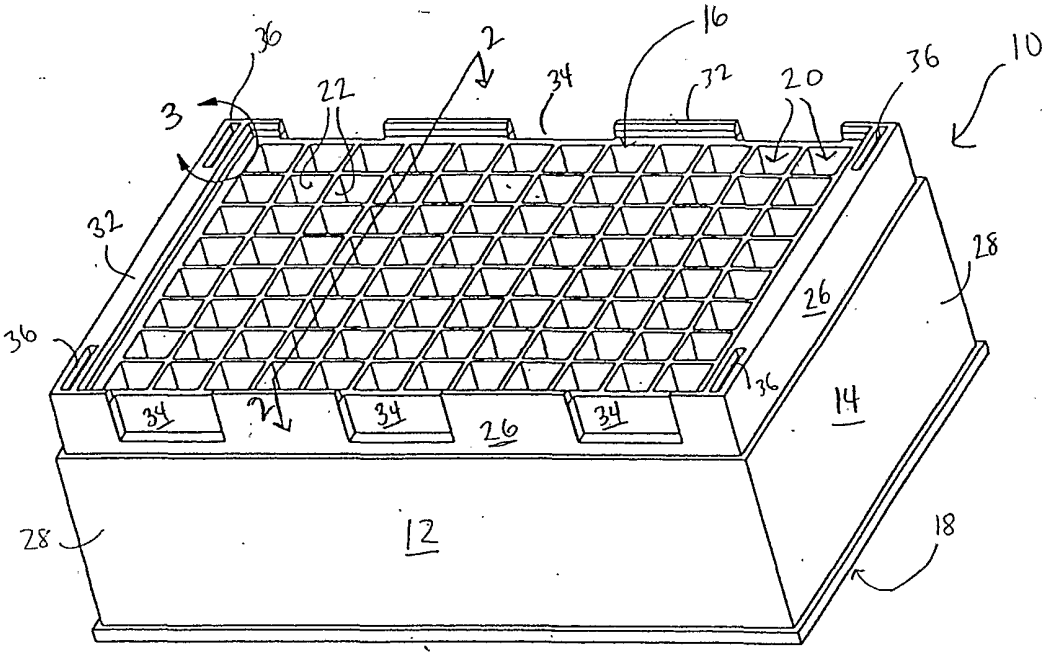


FIGURE 1

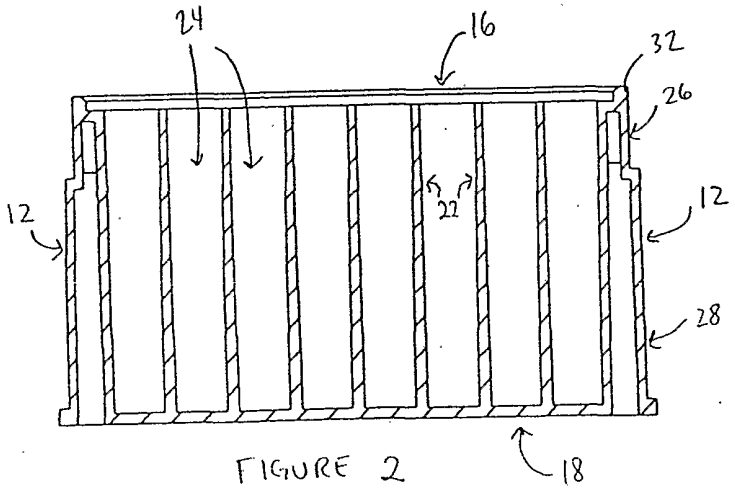


FIGURE 2

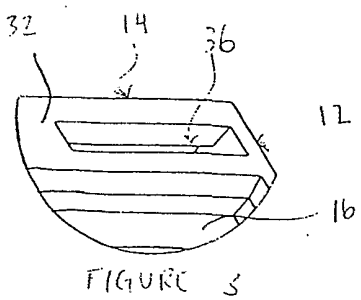


FIGURE 3

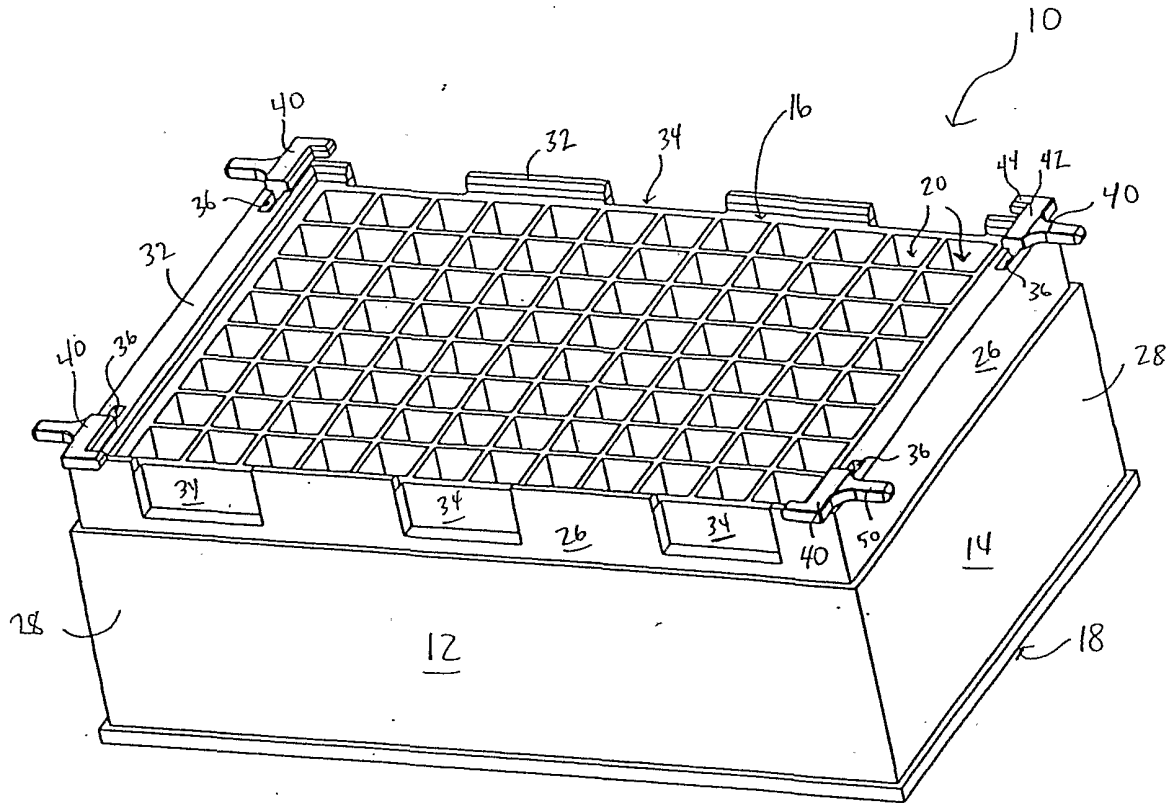


FIGURE 5

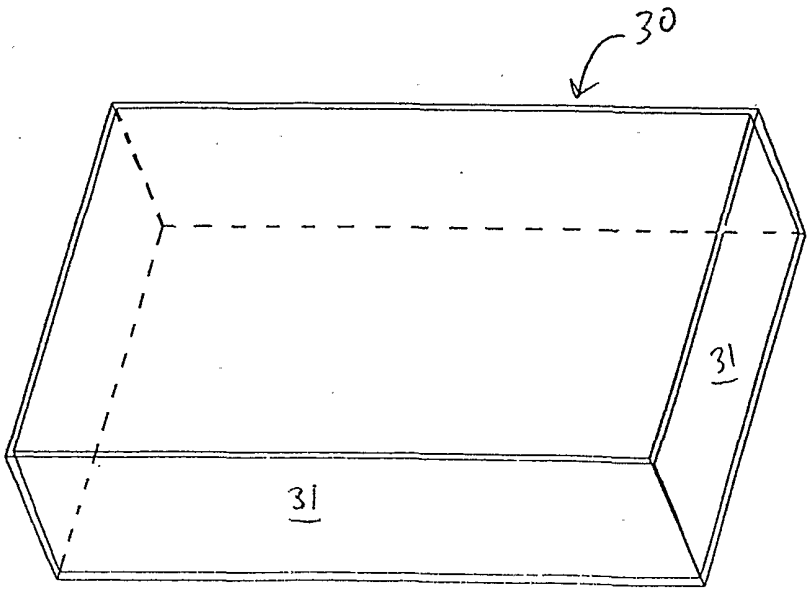


FIGURE 4

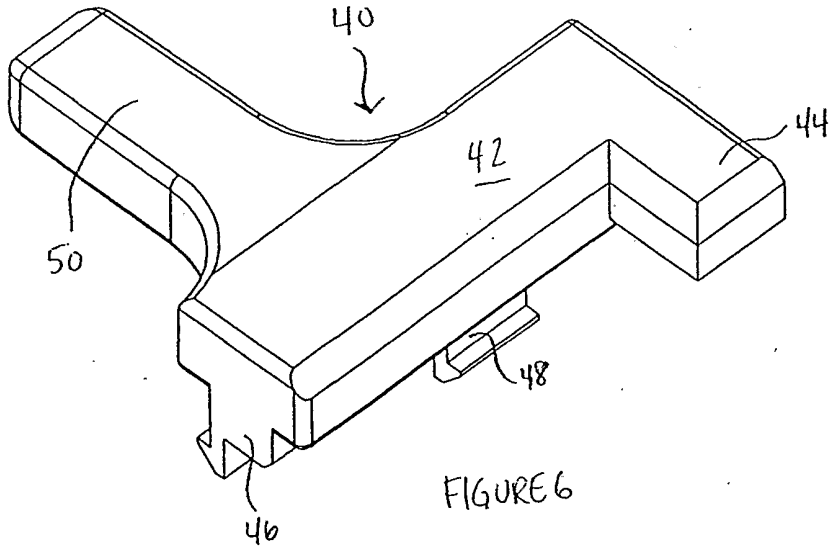


FIGURE 6

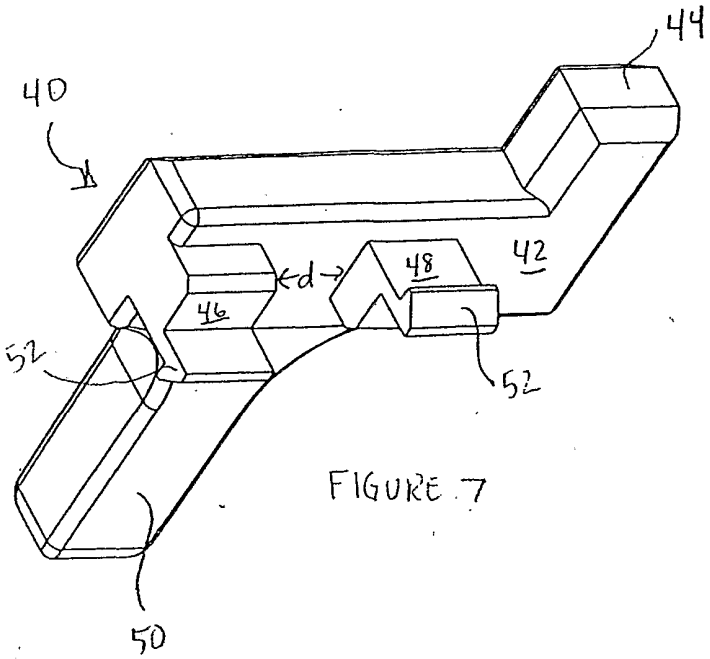


FIGURE 7

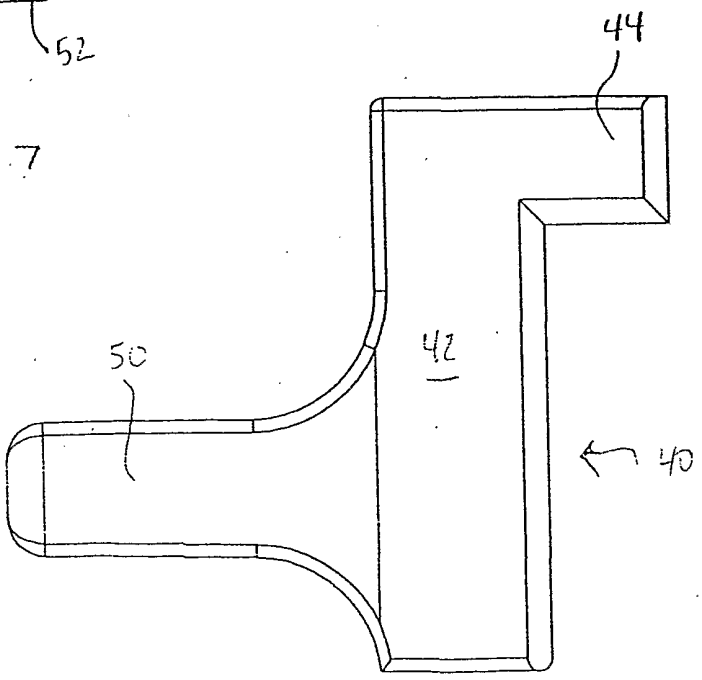


FIGURE 8

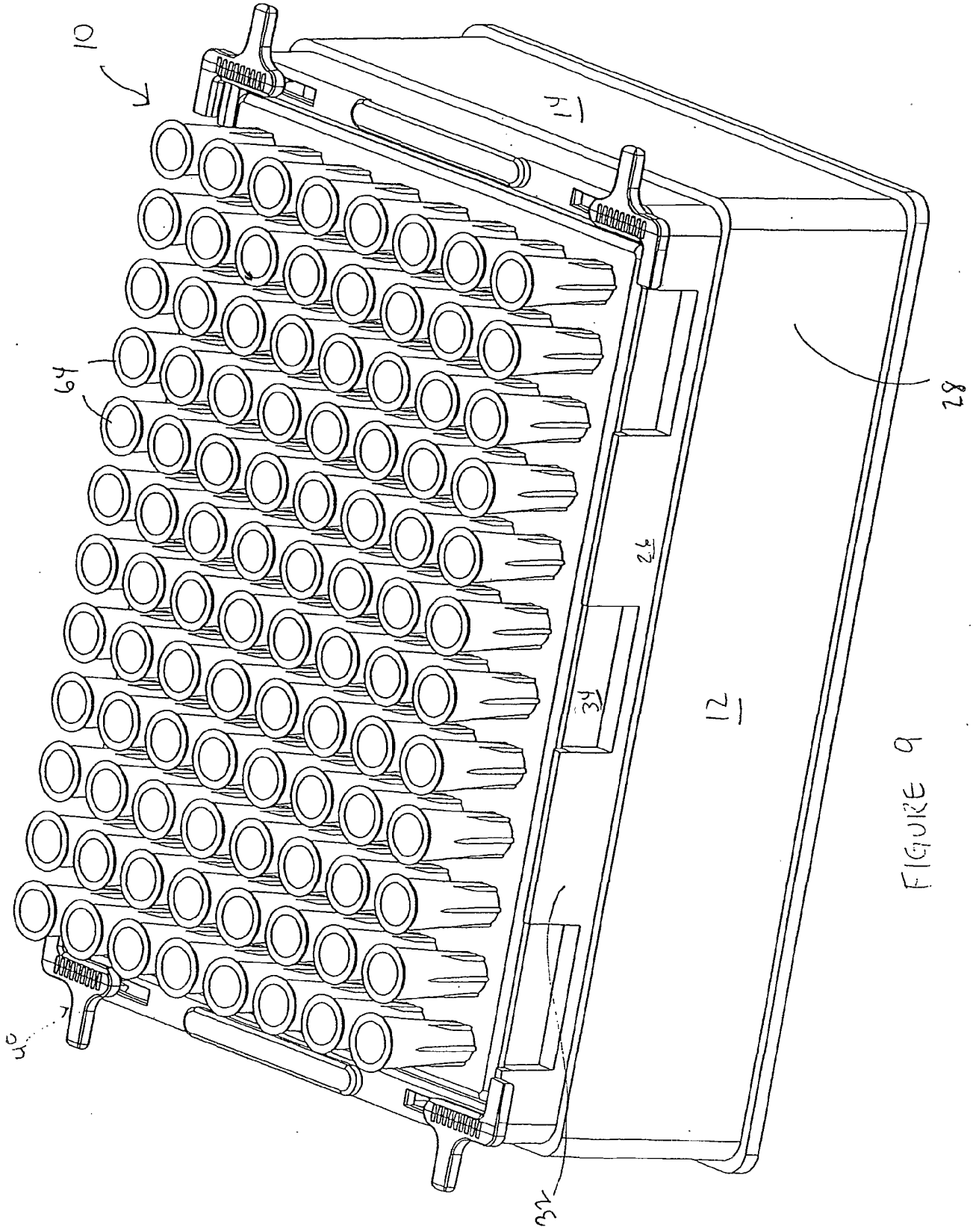


FIGURE 9

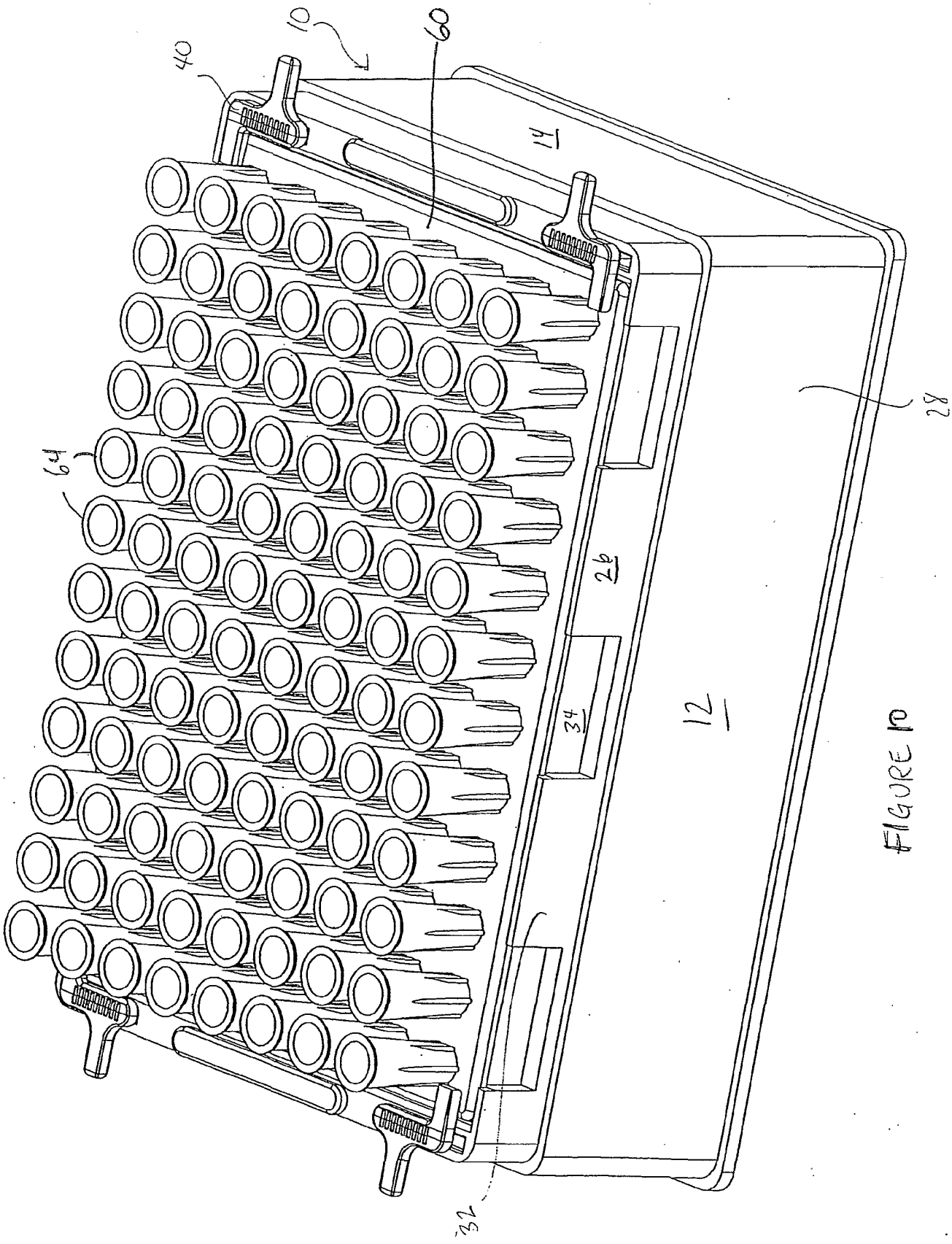


FIGURE 10

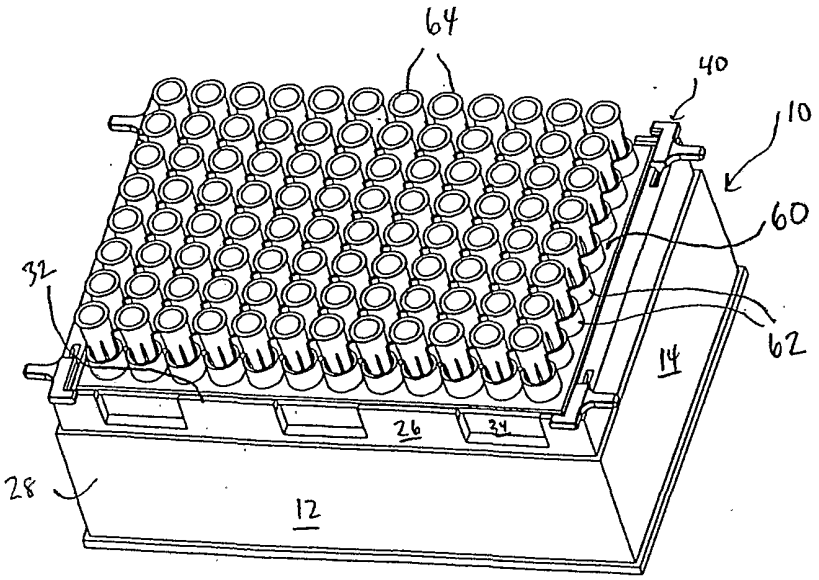


FIGURE 11

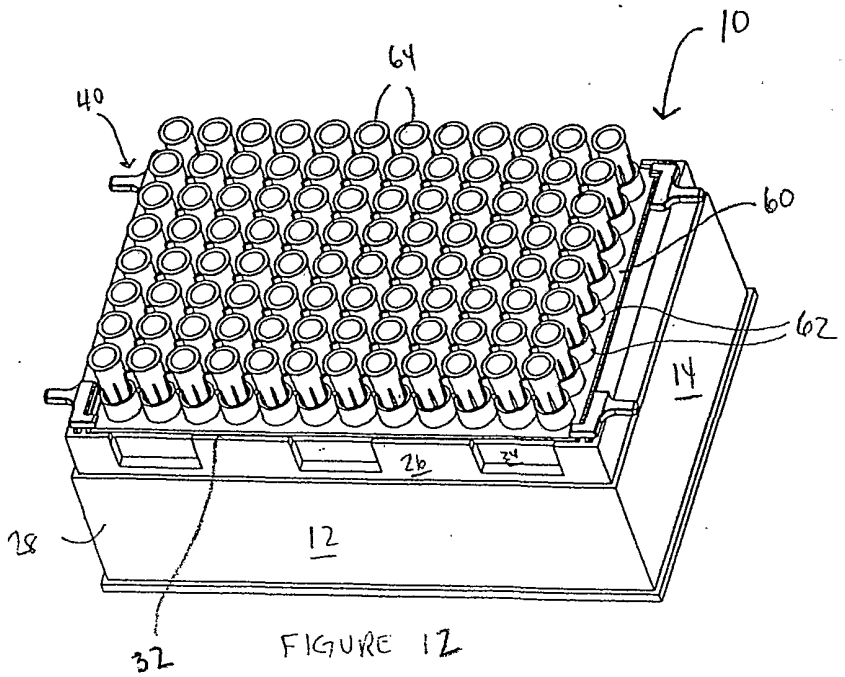


FIGURE 12

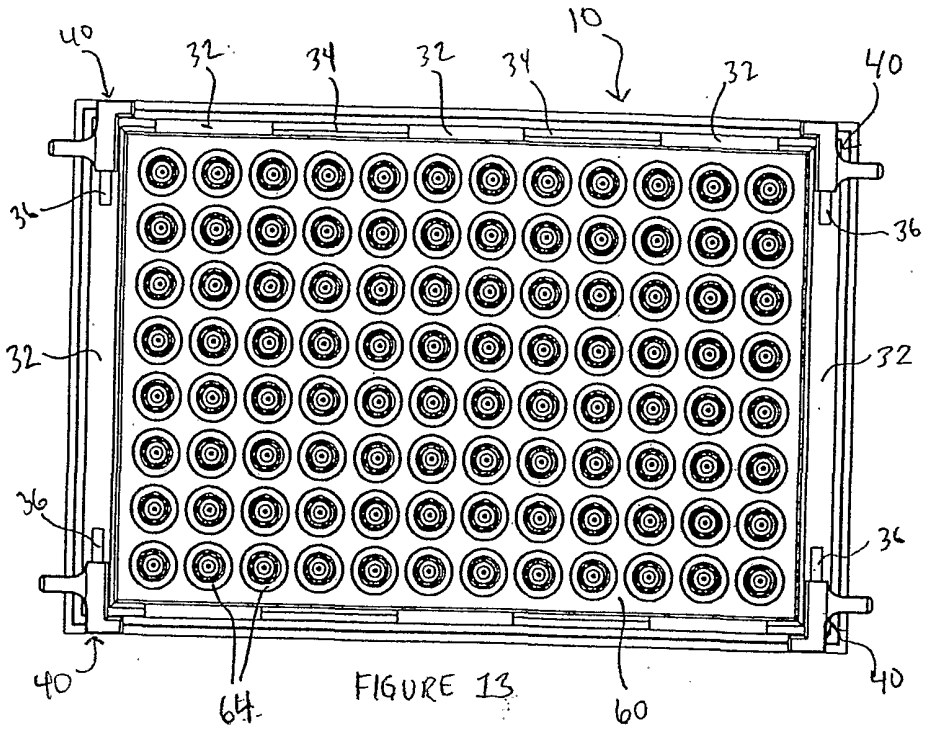


FIGURE 13

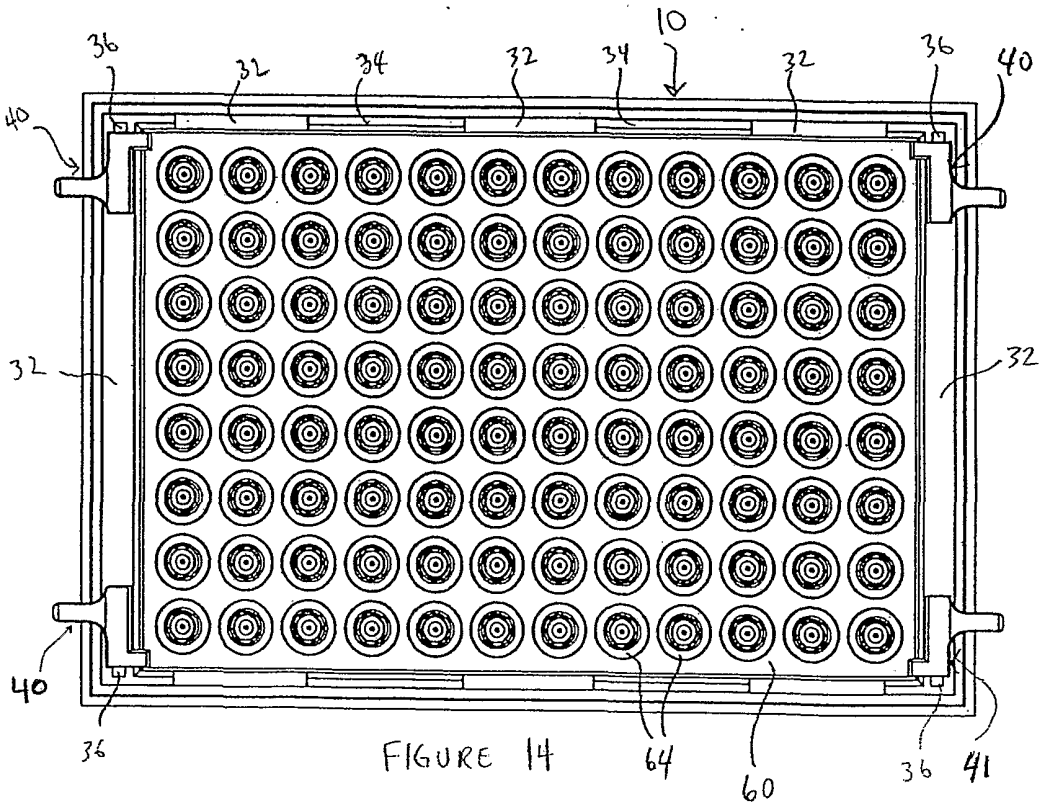


FIGURE 14

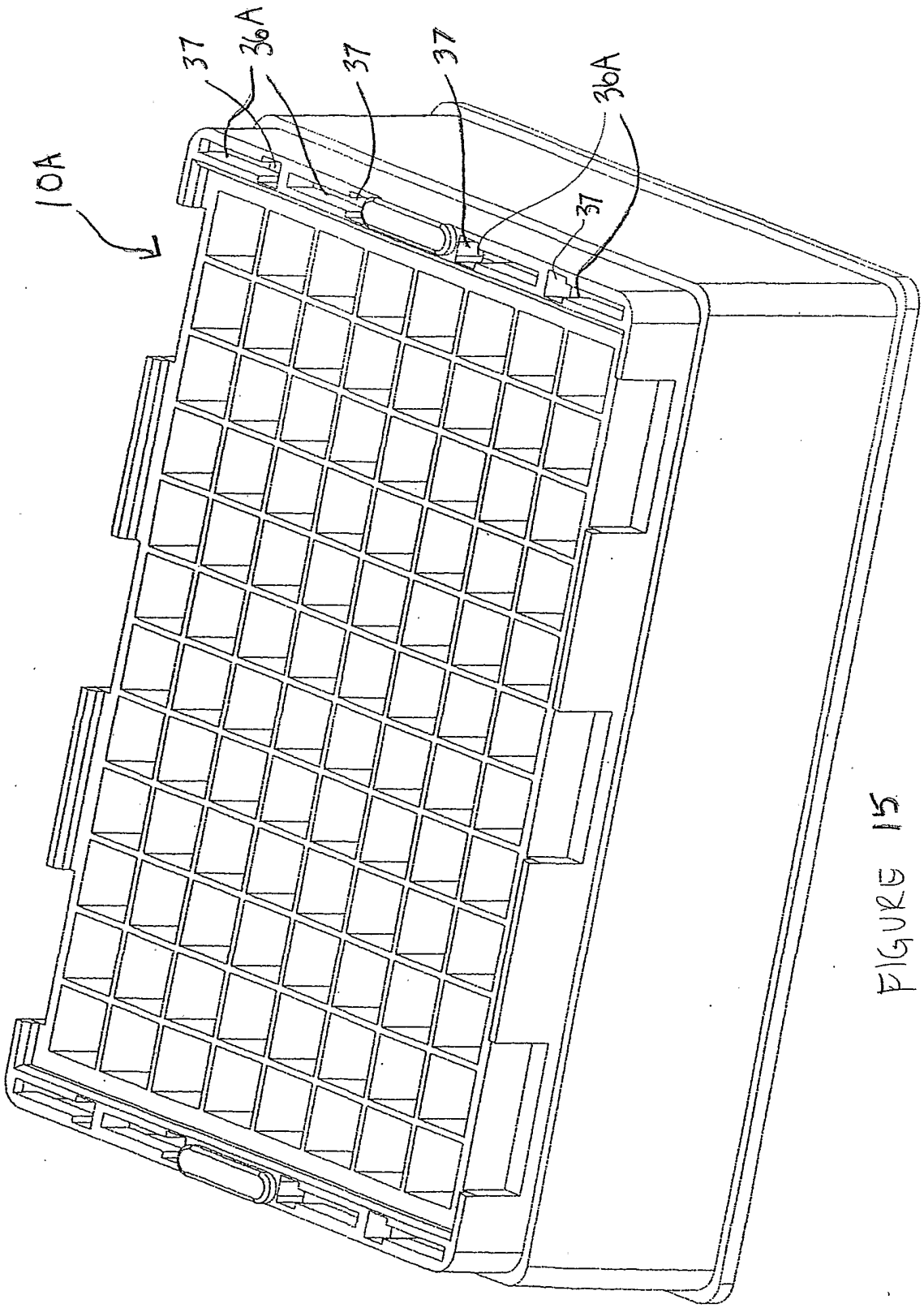


FIGURE 15

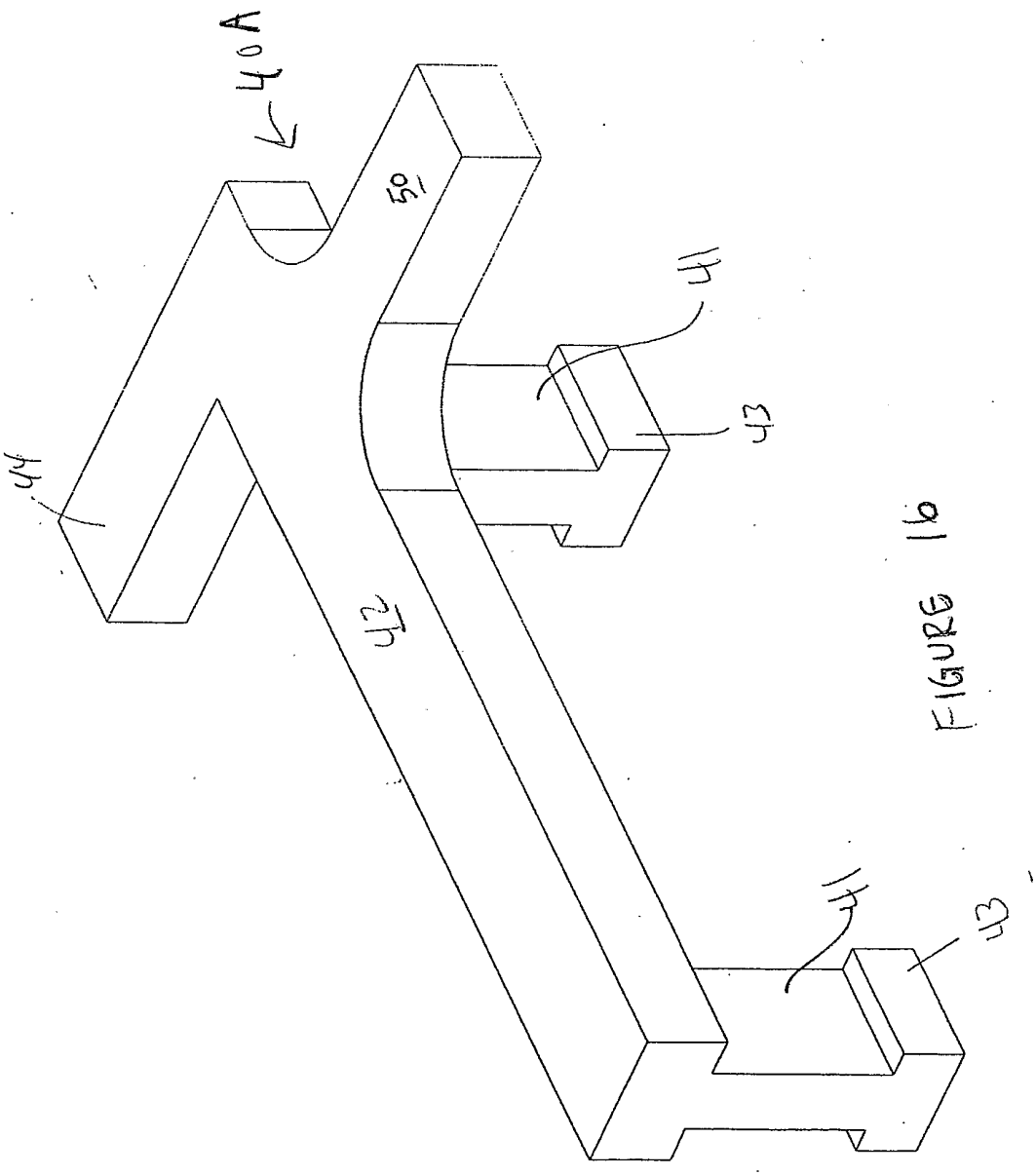


FIGURE 16

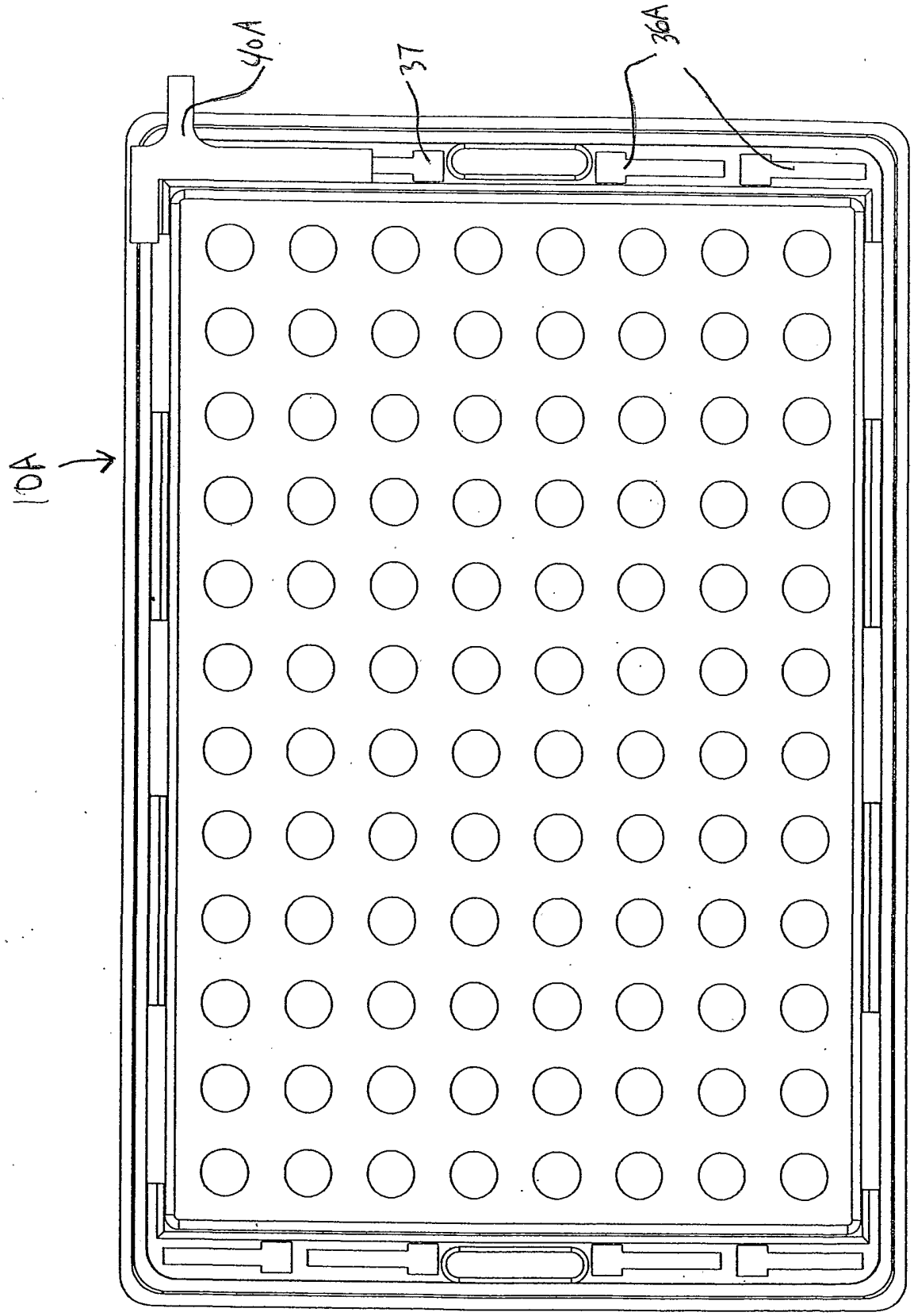


FIGURE 17

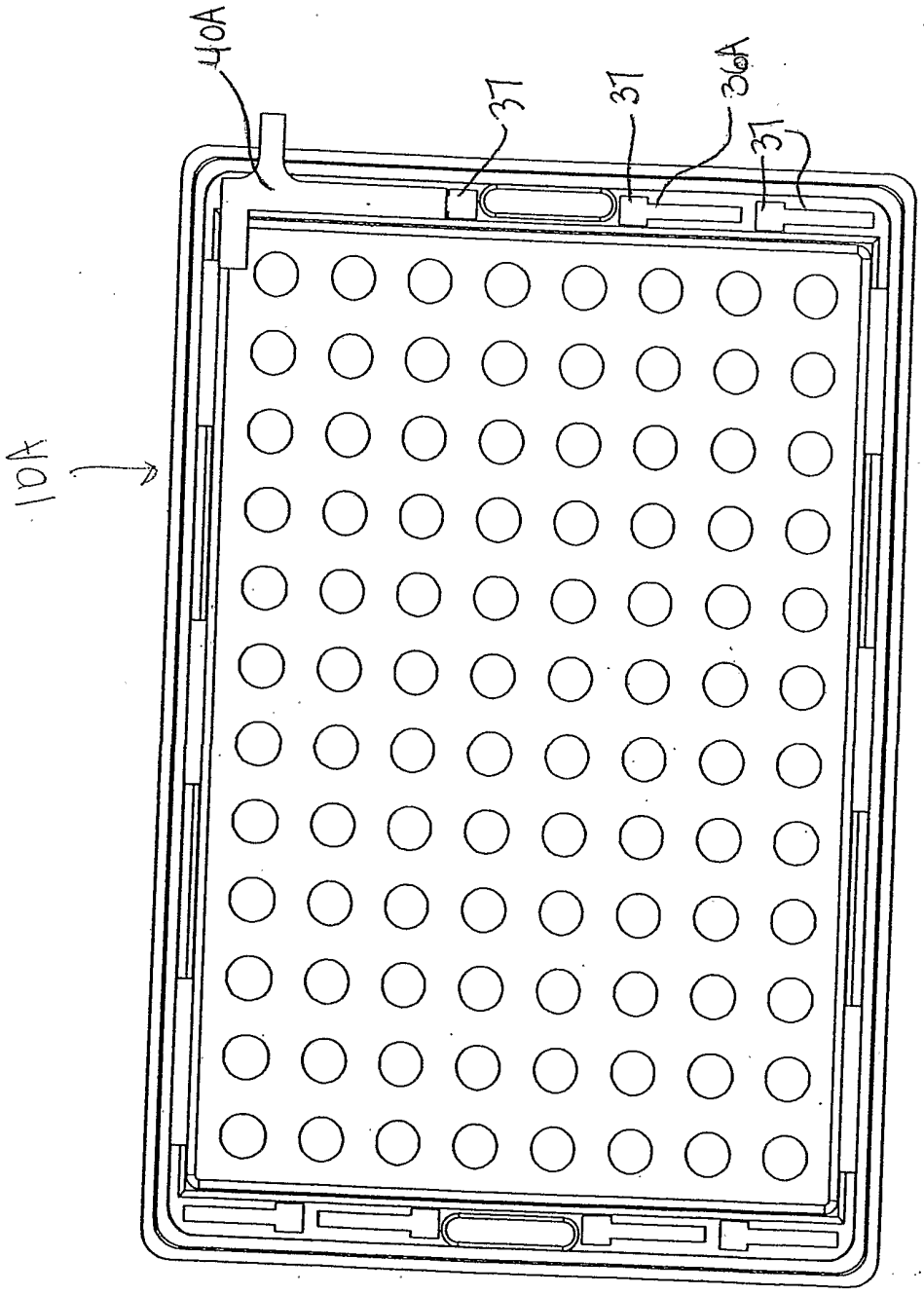


FIGURE 18

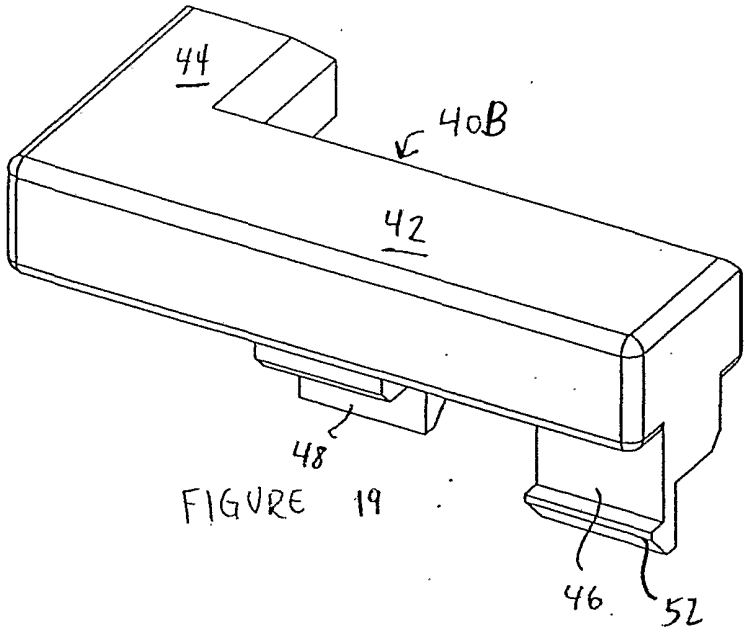


FIGURE 19

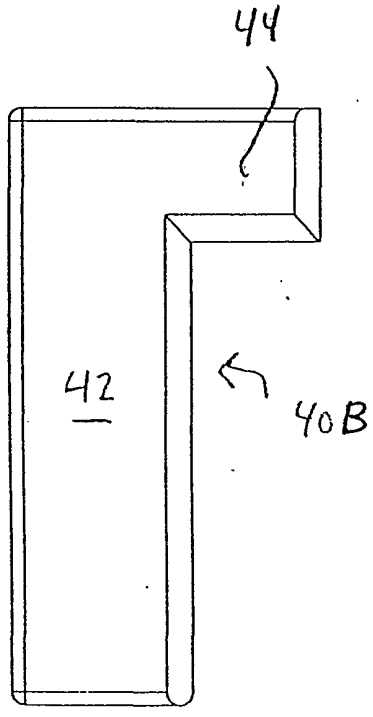


FIGURE 20

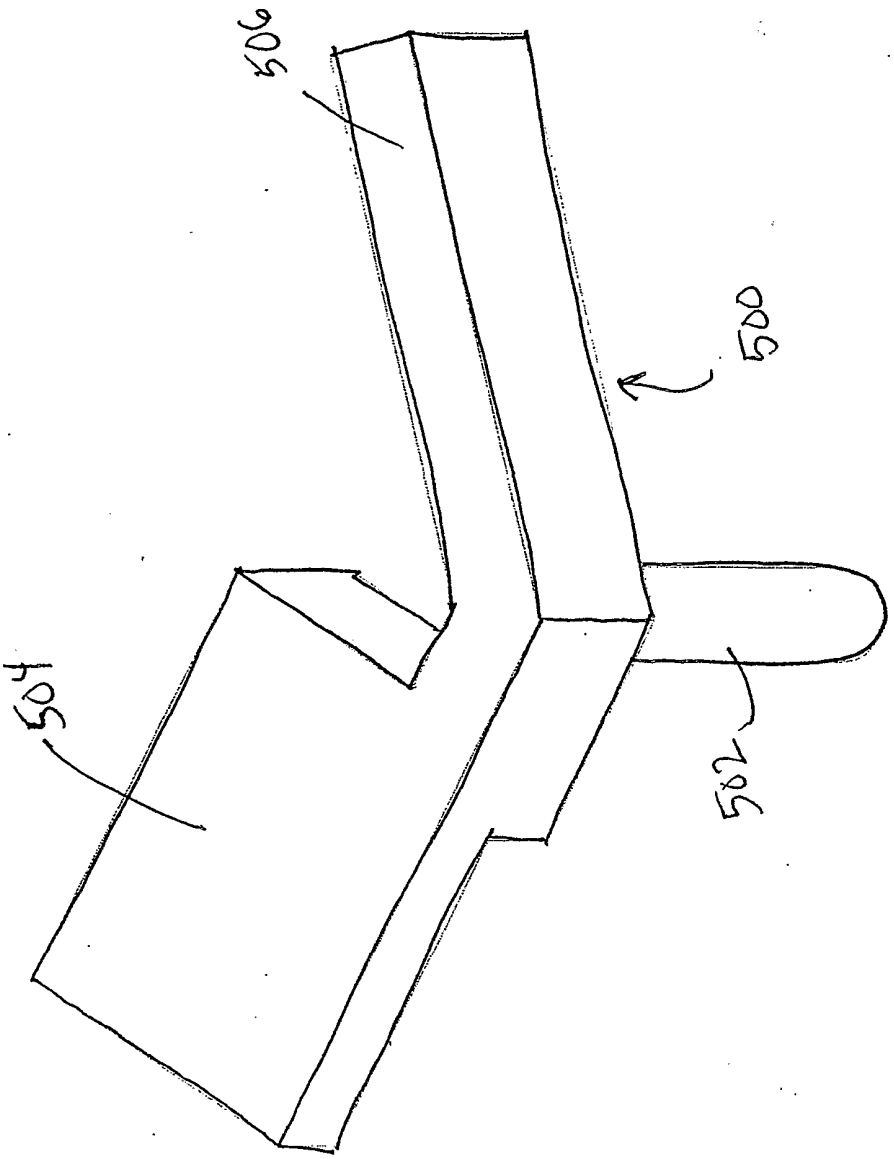


FIGURE 21

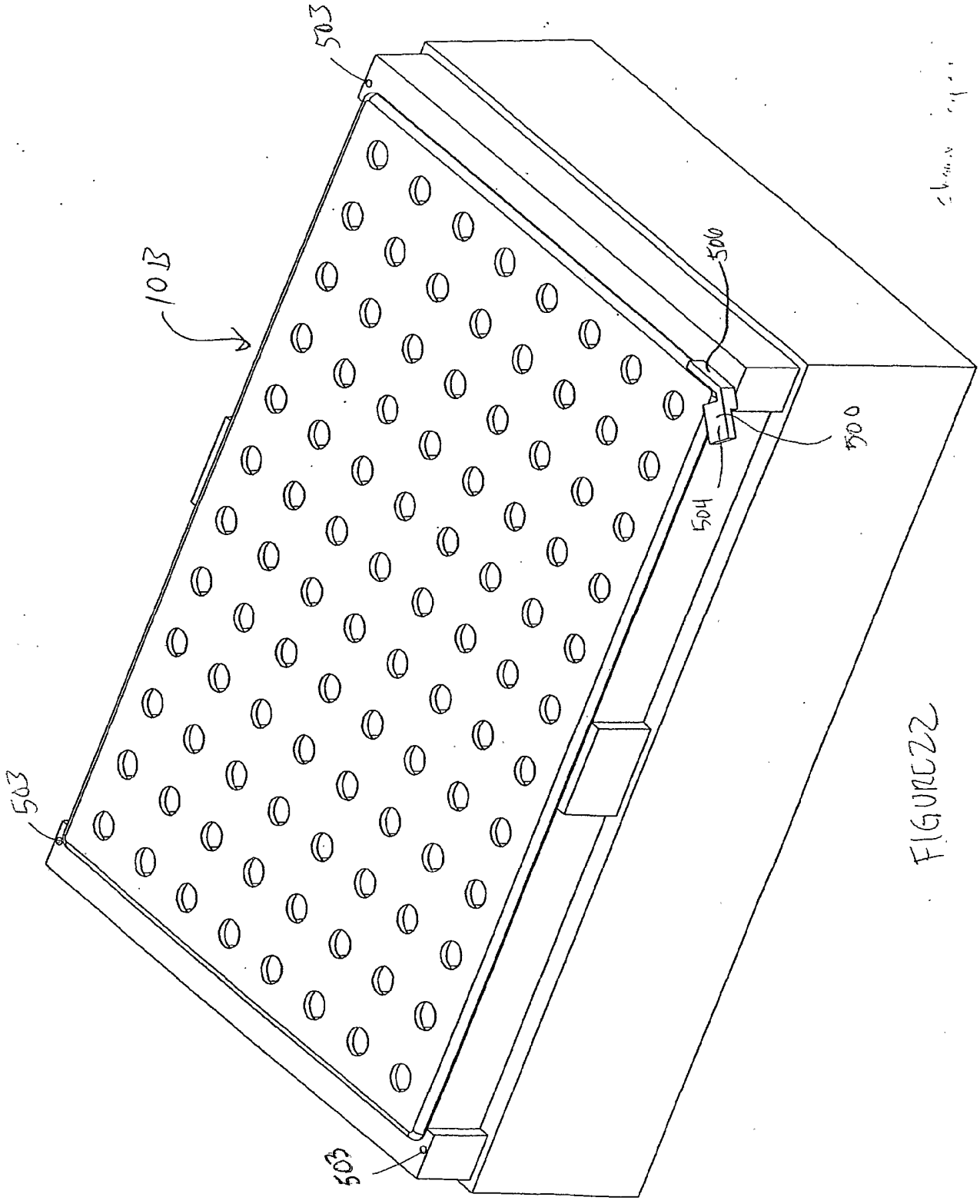


FIGURE 22

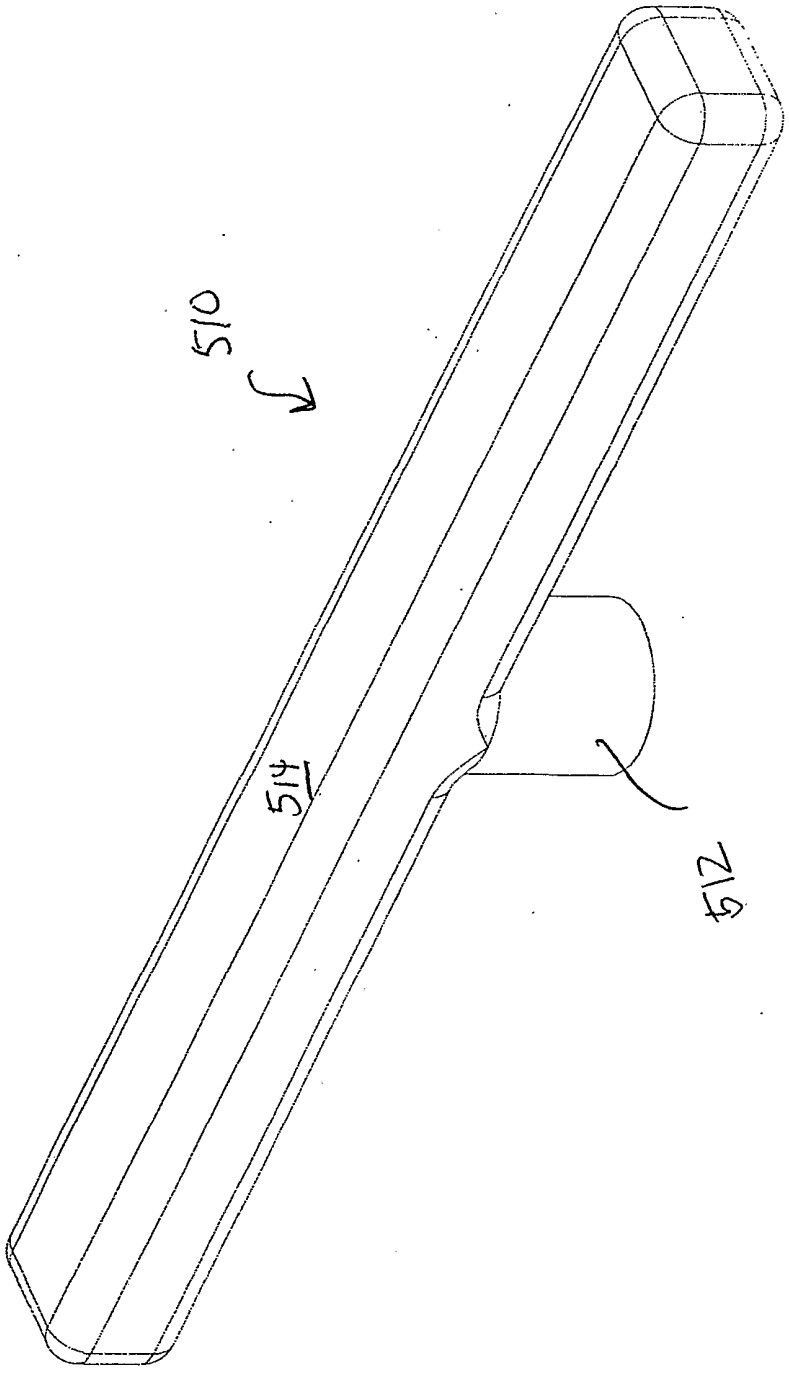


FIGURE 23

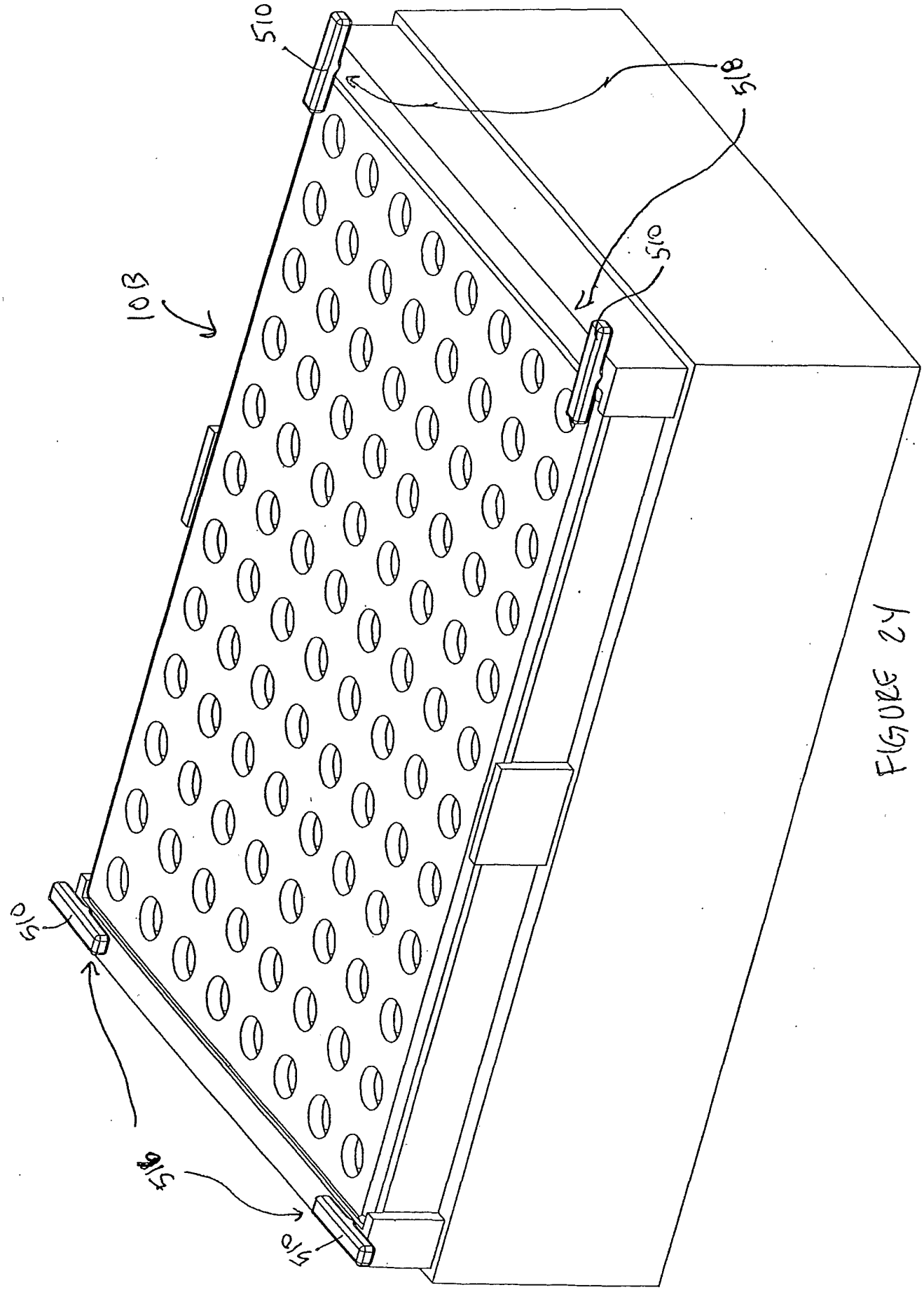


FIGURE 24

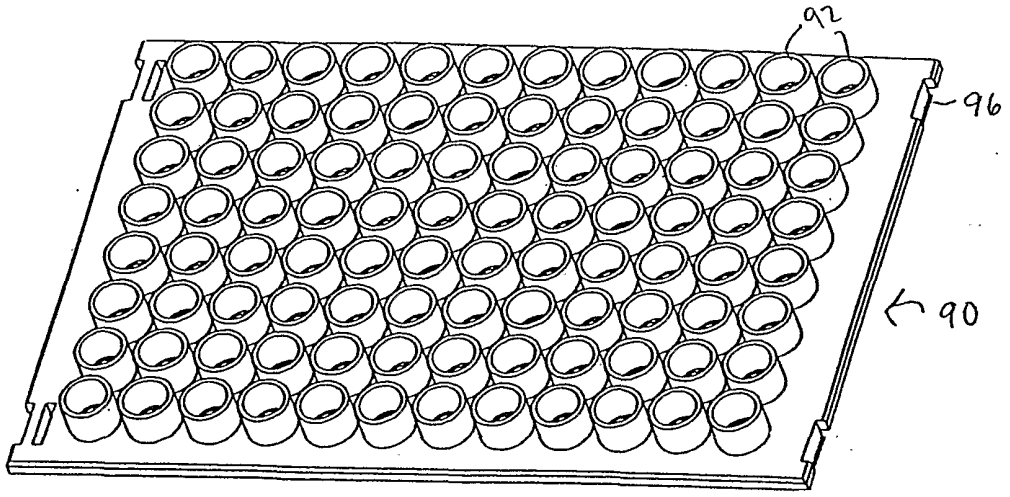


FIGURE 25

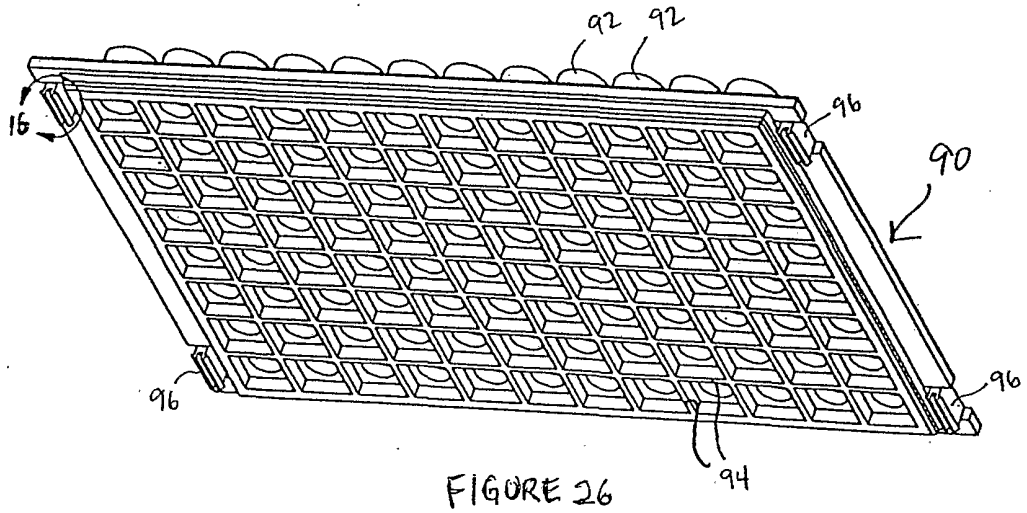


FIGURE 26

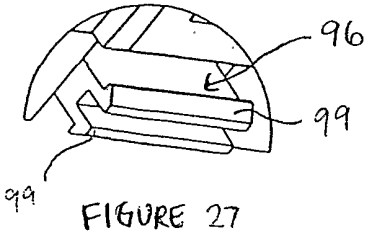


FIGURE 27

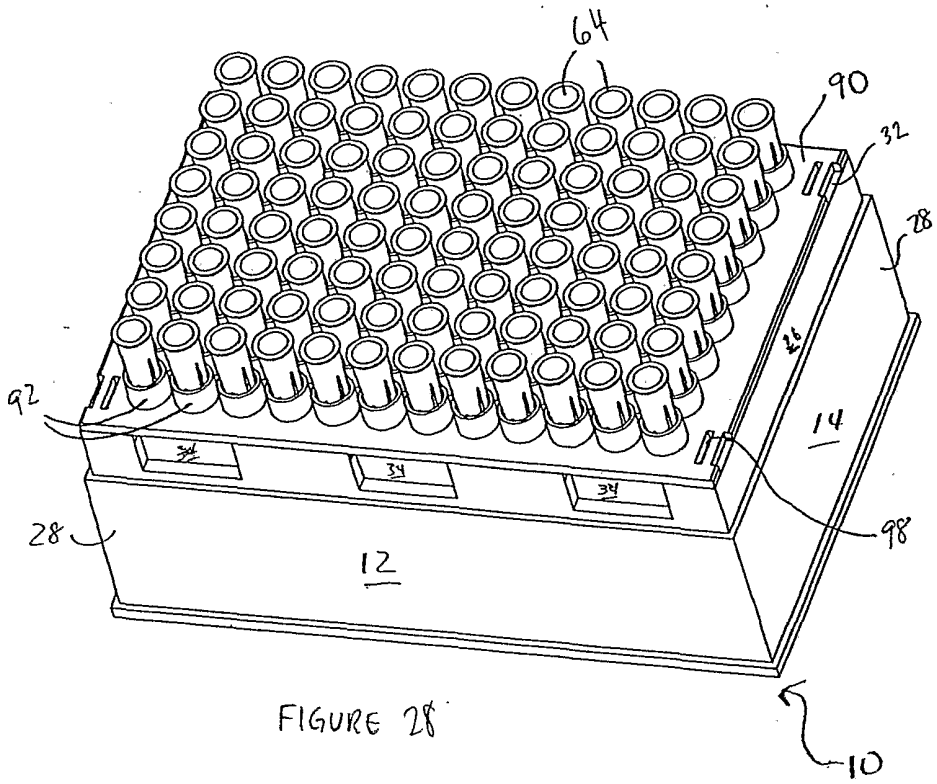


FIGURE 28

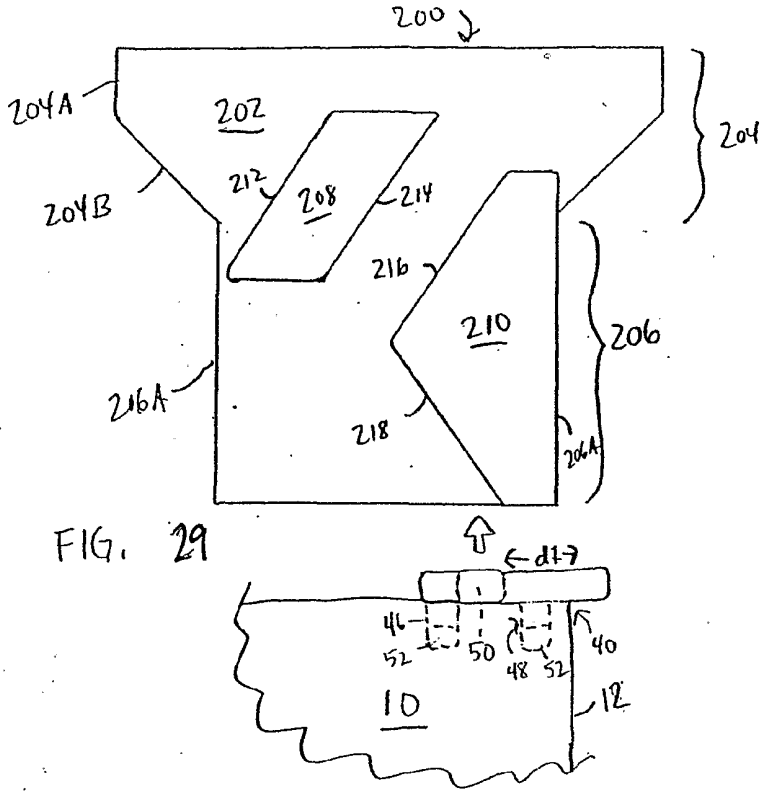


FIG. 29

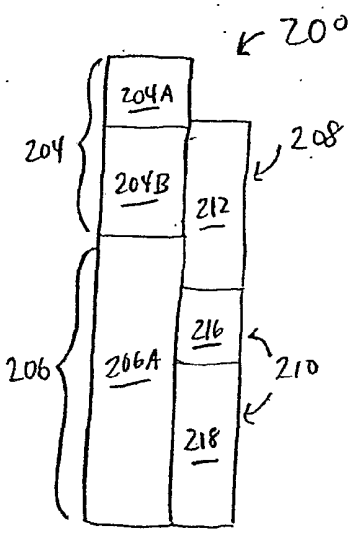


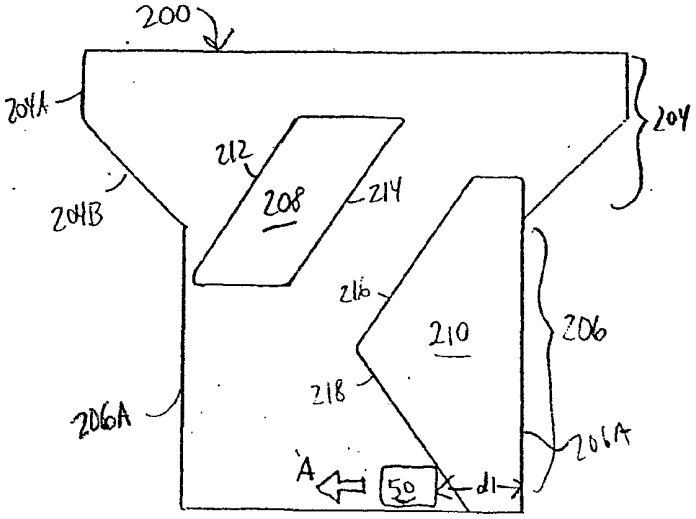


FIG. 31

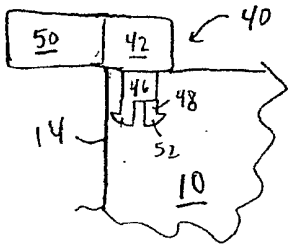


FIG. 30

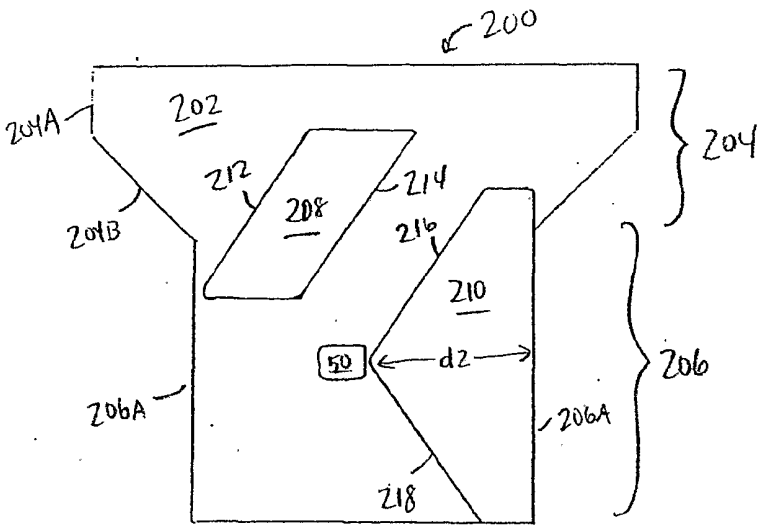


FIG. 32

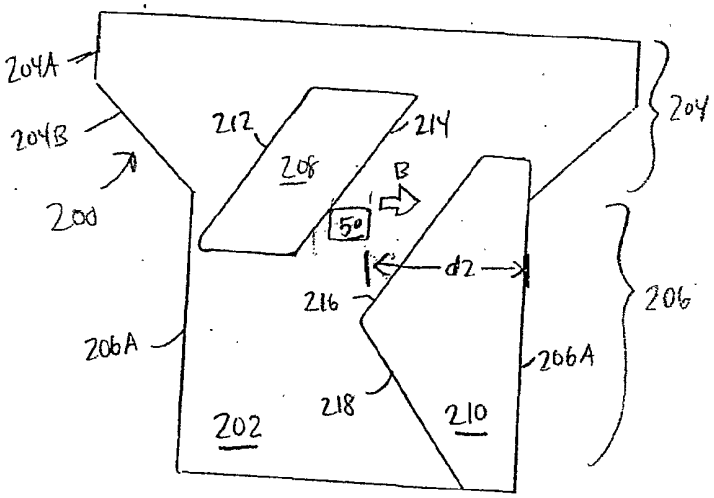


FIG. 33

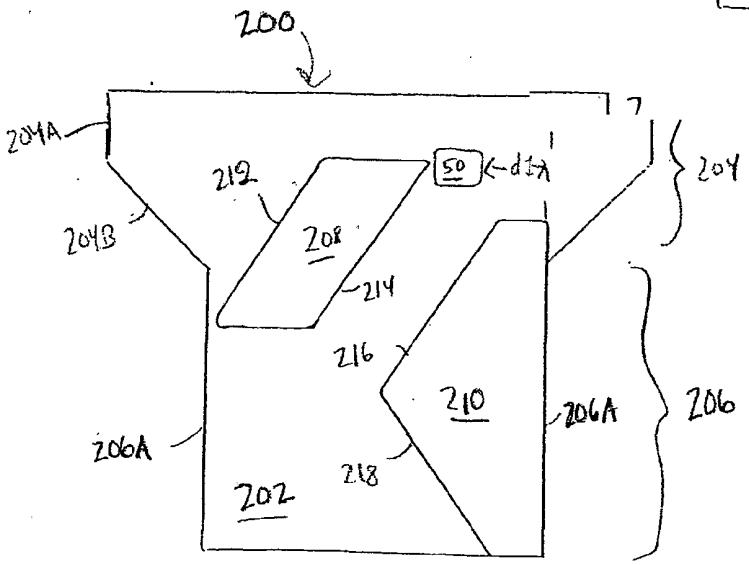


FIG. 34

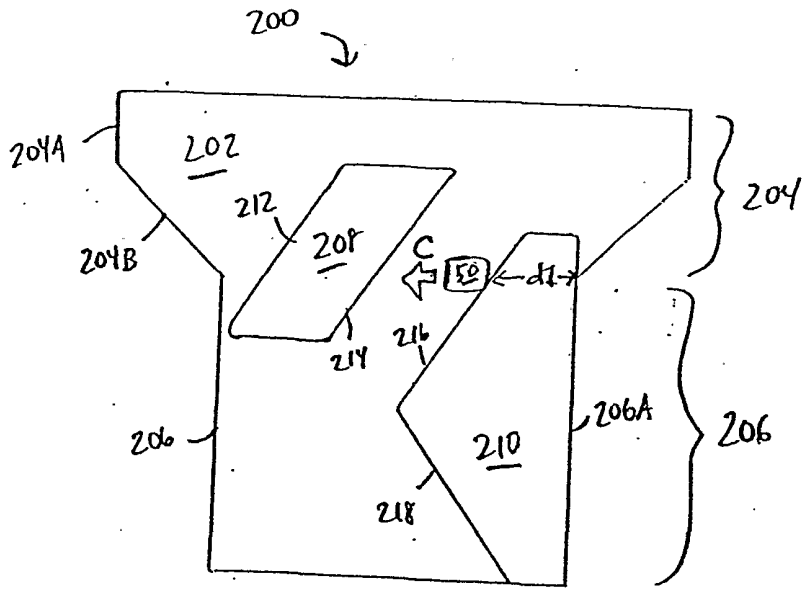


FIGURE 35

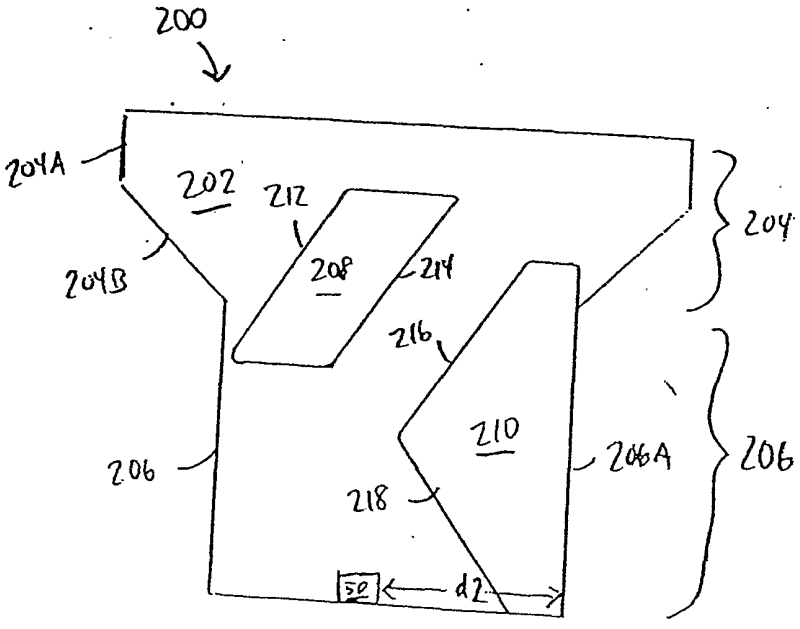


FIG. 36

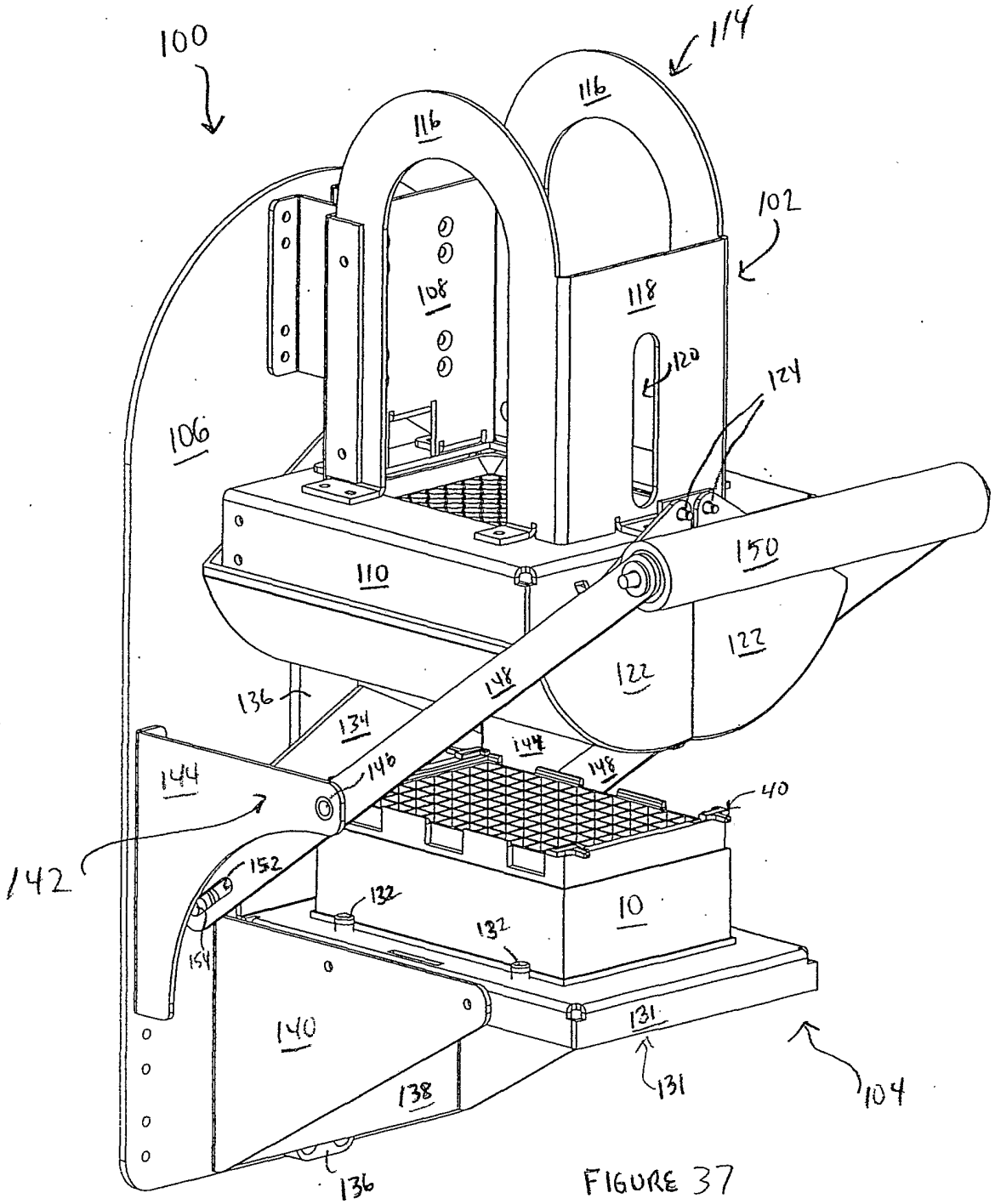


FIGURE 37

CLOSED

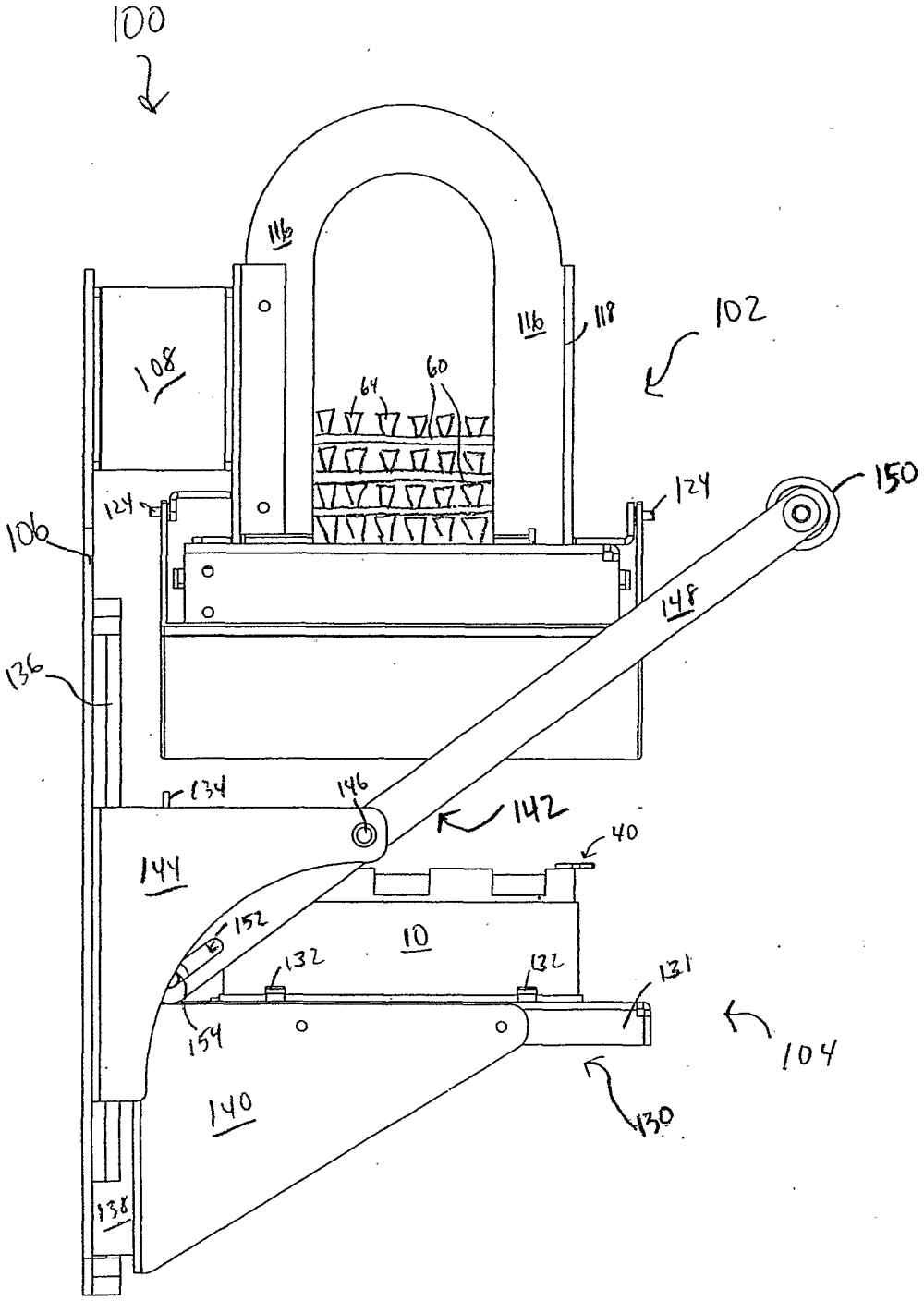


FIGURE 38

SUB

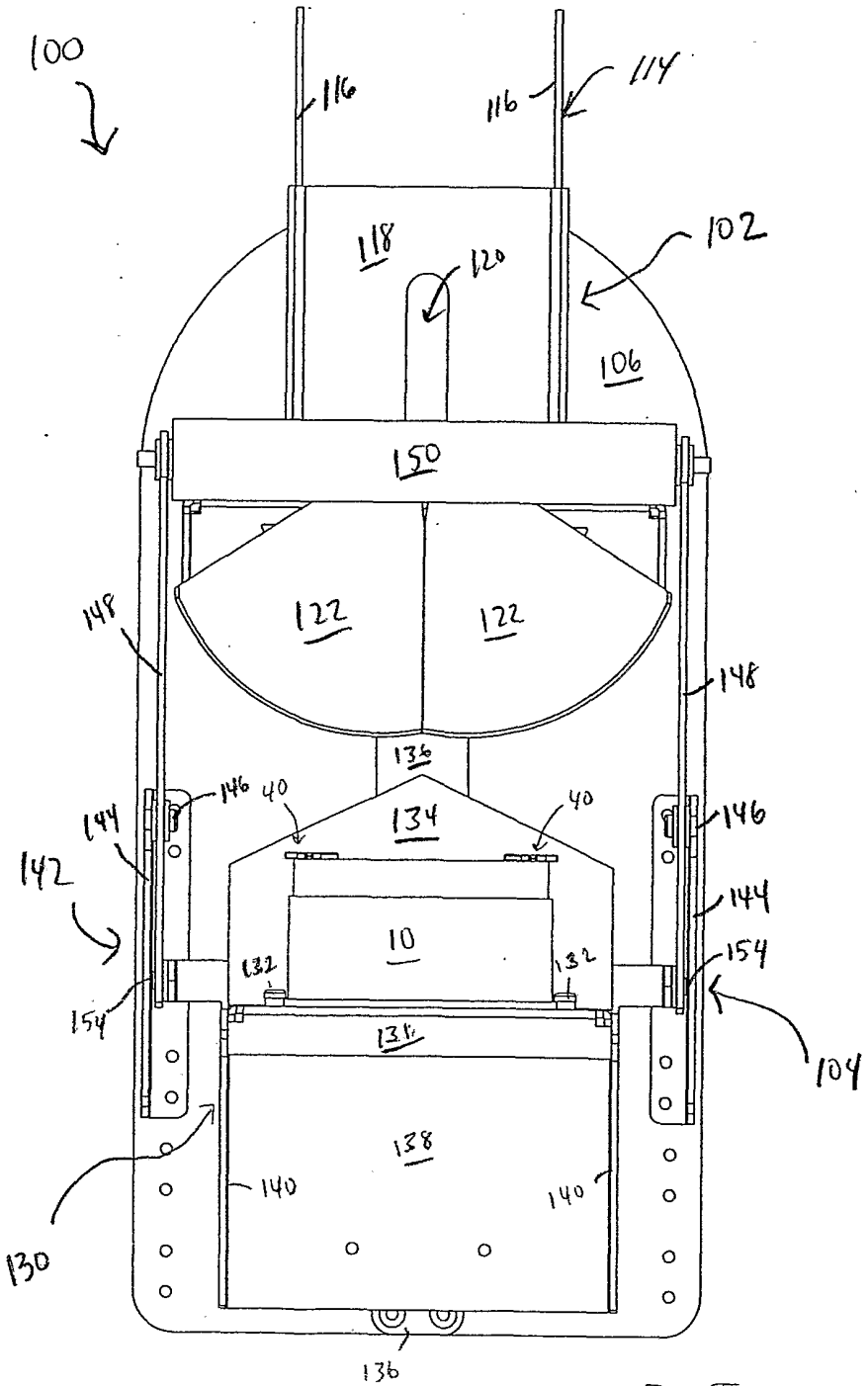


FIGURE 39 PRIOR ART

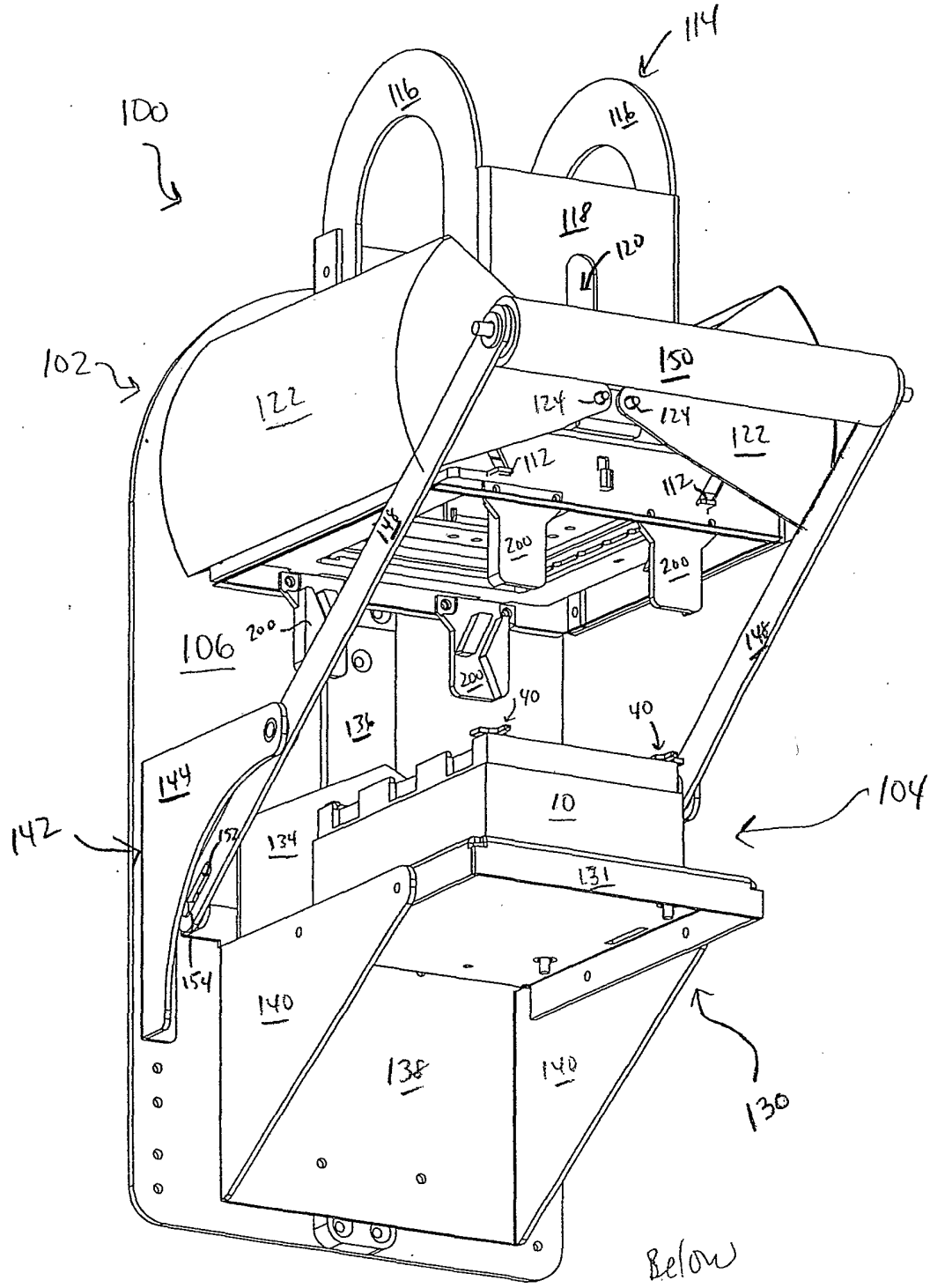
114
116
116
100
118
120
102
122
150
124
124
122
112
112
148
200
200
106
200
200
146
40
40
134
144
10
104
142
152
134
131
154
140
138
140
130
Below

FIGURE 40

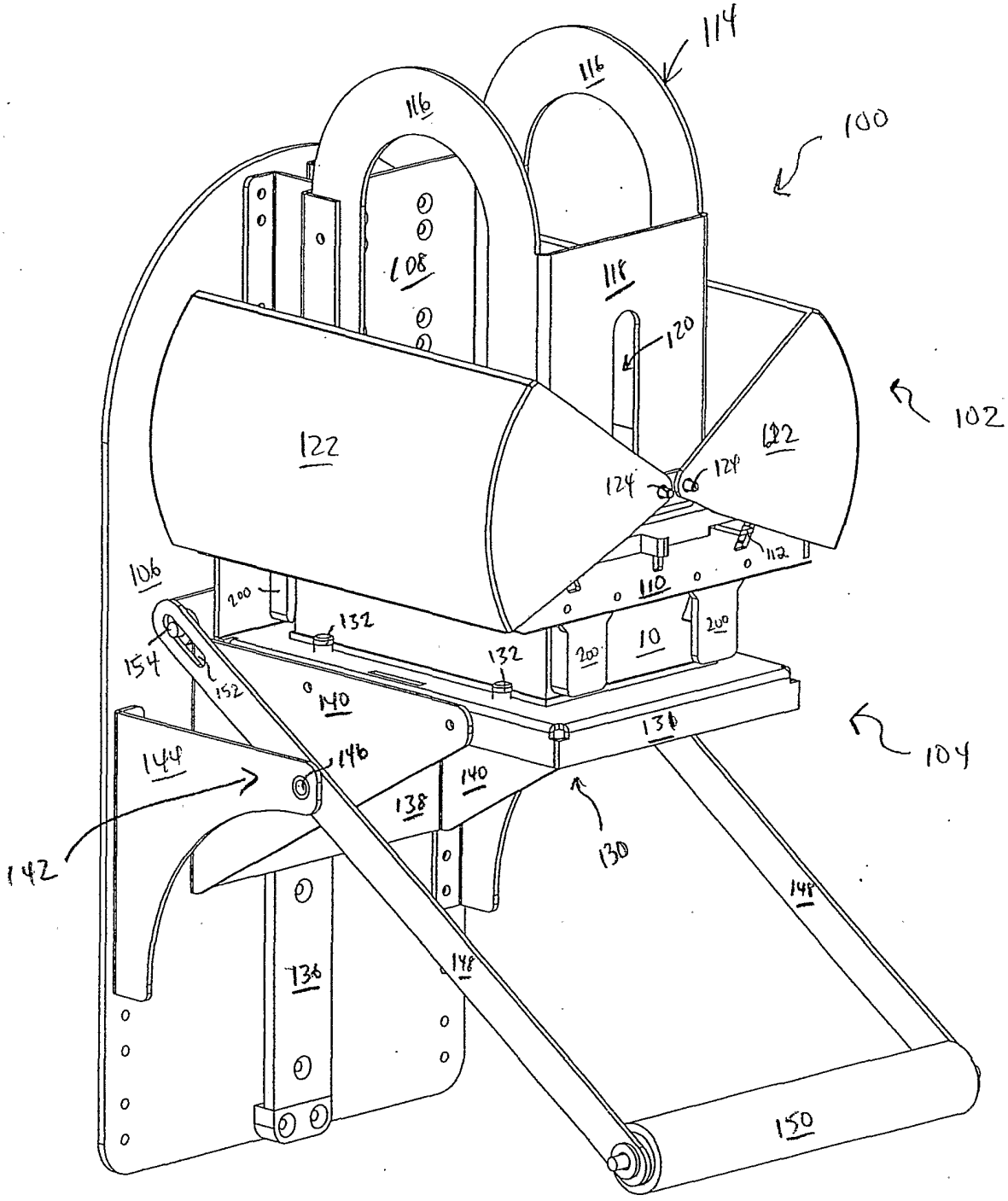


FIGURE 41

Open clamshells.