Oct. 11, 1932. M. LICHTER 1,881,736

DISPLAY SHEET

Filed Feb. 26, 1930

FIGURE 1

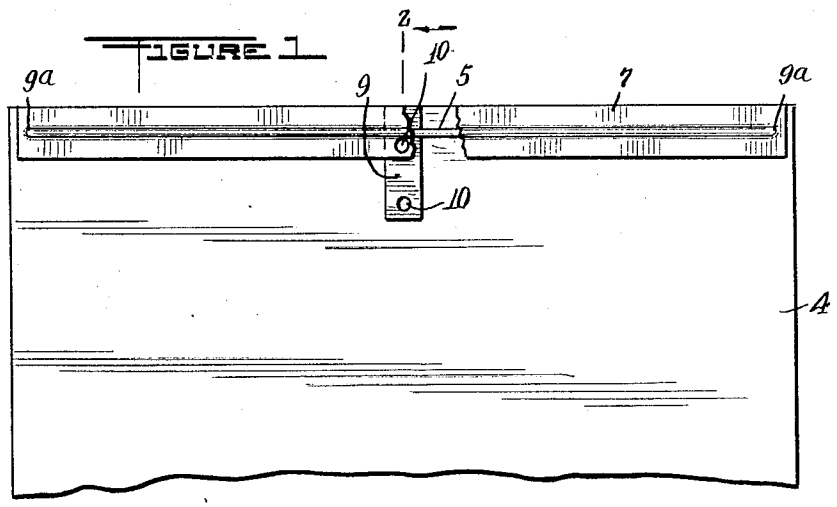

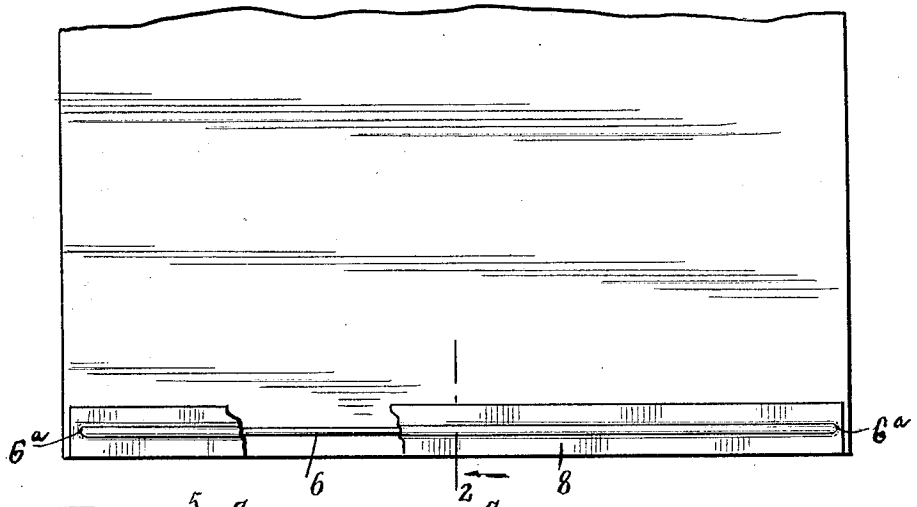

FIGURE 2

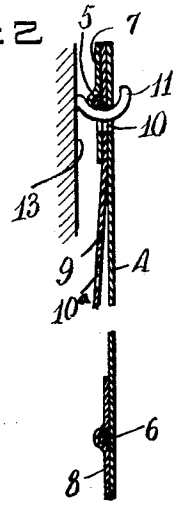

FIGURE 3

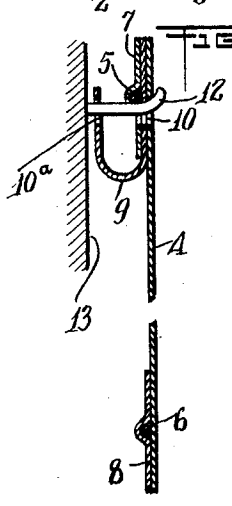

INVENTOR
Malvin Lichter
BY Walton Harrison
ATTORNEY

Patented Oct. 11, 1932 1,881,736

UNITED STATES PATENT OFFICE

MALVIN LICHTER, OF NEW YORK, N. Y., ASSIGNOR TO THE STICKLESS CORPORATION, A CORPORATION OF NEW YORK

DISPLAY SHEET

Application filed February 26, 1930. Serial No. 431,383.

My invention relates to display sheets of the kind used for maps, calendars, pictures, various kinds of advertisements, etc., and in which the display sheet is adapted to be suspended from a hook or other fastening member secured to a wall.

More particularly stated, my invention relates to the construction of the display sheet for the purpose of reducing the wear and tear to which it is subjected in use, and of lengthening its lifetime.

My invention further relates to means for strengthening the display sheet and for enabling it to remain flat and smooth, and also for keeping it taut, under conditions of actual use.

Reference is made to the accompanying drawing forming a part of this specification and in which like reference characters indicate like parts throughout the several figures.

Figure 1 is a fragmentary front elevation of my improved display sheet, certain parts being broken away.

Figure 2 is a section on the line 2—2 of Figure 1, looking in the direction indicated by the arrows.

Figure 3 is a section somewhat similar to Figure 2 but showing the display sheet as mounted in a slightly different way.

A web 4 serves as the body portion of the display sheet. This web as here shown is made of paper, but it may be made of any other sheet material appropriate for the purpose. It is adapted to serve as a map, a calendar, a picture or the like, or to display advertising matter of memoranda of various kinds, in the manner well known in this art.

Located near the upper edge of the display sheet 4 is a reinforcing rod 5, and near the lower edge is a bottom reinforcing 6. These rods are preferably short pieces of straight, stiff wire.

Each reinforcing rod 5, 6, is of a length a little less than the width of the display sheet.

Located at the top of the display sheet 4, and secured to the same by an adhesive, is a top reinforcing strip 7, which covers and conceals the top reinforcing rod 5. This reinforcing strip is slightly longer than the reinforcing rod 5, and overlaps and conceals the ends 9*a*, 9*a*, thereof. But the length of the reinforcing strip is a little less than the width of the display sheet, thus leaving a small margin at each end of the reinforcing strip.

Another reinforcing strip 8, of the kind just described, is mounted upon the bottom end of the display sheet, so as to cover the bottom reinforcing rod 6 and to slightly overlap the ends 6*a*, 6*a*, thereof.

The reinforcing strips 7 and 8 as here shown are made of tough paper, but they can be made of any other flexible and tough sheet material suitable for the purpose.

Extending underneath the middle portion of the reinforcing rod 5 and thus under the adjacent middle portion of the top reinforcing strip 7 is an eye strap 9, secured adhesively to the reinforcing strip and to the adjacent portion of the display sheet.

A hole 10 extends through the display sheet and through the adjacent portion of the eye strap 9 and reinforcing strip 7, as may be understood from Figures 2 and 3. This hole is used for suspending the display sheet, as indicated in these two figures.

The eye strap 9 is provided near its free end with a hole 10*a*.

The display sheet may be suspended from a hook 11 by passing this hook through the hole 12, as indicated in Figure 2. In this case the eye strap 9 simply hangs down idly, as indicated in this figure. If desired, however, the eye strap 9 may be bent up, and the hook 12 passed through both holes 10*a* and 10, as indicated in Figure 3. The purpose of this arrangement is to cause the eye strap 9 to space the display sheet a slight distance away from the wall, shown at 13.

With the display sheet suspended from a hook, as indicated in either Figure 2 or Figure 3, the middle portion of the top reinforcing rod 5 rests directly upon the hook. By this arrangement, practically all of the strains to which the display sheet is subjected are borne by the top rod 5, and are thence distributed in both directions toward the ends of the rod and toward the ends of the reinforcing strip 7. From the top reinforcing rod 5 and the reinforcing strip 7 the stresses

are distributed uniformly in many directions, to and from the body of the display sheet.

The bottom reinforcing rod 6 and the bottom reinforcing strip 8 serve somewhat similarly to distribute stresses taking place at the bottom end of the display sheet.

I have found in actual practice that by means of the construction above described the durability of the display sheet is greatly improved, and its lifetime thereby increased.

It will be noted from Figures 2 and 3 that the top reinforcing rod 5, bottom reinforcing rod 6, and both reinforcing strips 7 and 8 are completely hidden from the view of a person standing away from the wall 13 and looking at the adjacent face of the display sheet.

I do not limit myself to the precise construction shown, as variations may be made therein without departing from my invention, the scope of which is commensurate with my claims.

Having thus described my invention what I claim as new and desire to secure by Letters Patent is as follows:—

1. A display sheet having upper and lower edges, a reinforcing strip pasted along the upper edge of the sheet, a re-inforcing rod also extending along the upper edge of the sheet interposed between the sheet and strip and held thereby against displacement, an eye strap also interposed between the sheet and the strip and held thereby against displacement, a portion of the eye strap extending below the strip and being free of the sheet and strip and having a hole through its lower end part for use in suspending the sheet upon a wall hook, and said sheet, strip and strap having a through hole therethrough close beneath the re-inforcing rod also for use in suspending the sheet upon the wall hook.

2. A display sheet having upper and lower edges, a re-inforcing strip pasted along the upper edge of the sheet, a re-inforcing rod also extending along the upper edge of the sheet interposed between the sheet and strip and held thereby against displacement, an eye strap also interposed between the sheet and the strip and held thereby against displacement, a portion of the eye strap extending below the strip and being free of the sheet and strip, said sheet, strip and strap having a through hole therethrough close beneath the re-inforcing rod adapted to receive a wall hook for thereby suspending the sheet upon said hook, and the extending portion of said eye strap being bendable and adapted to be bent upwardly into spaced relation behind said strip so as to constitute a spacer for spacing the sheet away from the wall.

3. A display sheet having upper and lower edges, a re-inforcing strip pasted along the upper edge of the sheet, a re-inforcing rod also extending along the upper edge of the sheet interposed between the sheet and strip and held thereby against displacement, an eye strap also interposed between the sheet and the strip and held thereby against displacement, a portion of the eye strap extending below the strip and being free of the sheet and strip, said sheet, strip and strap having a through hole therethrough close beneath the re-inforcing rod adapted to receive a wall hook for thereby suspending the sheet upon said hook, and the extending portion of said eye strap having a hole through its lower end part and being bendable to dispose said hole in alignment with said through hole to also receive said wall hook.

Signed at New York city, in the county of New York and State of New York, this 19th day of February, A. D. 1930.

MALVIN LICHTER.