Dec. 23, 1952 J. G. NEULAND 2,623,179

MASS SPECTROMETER

Filed Nov. 23, 1948 2 SHEETS—SHEET 1

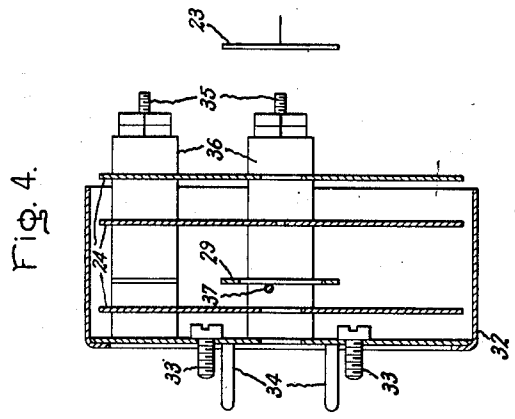

Fig. 4.

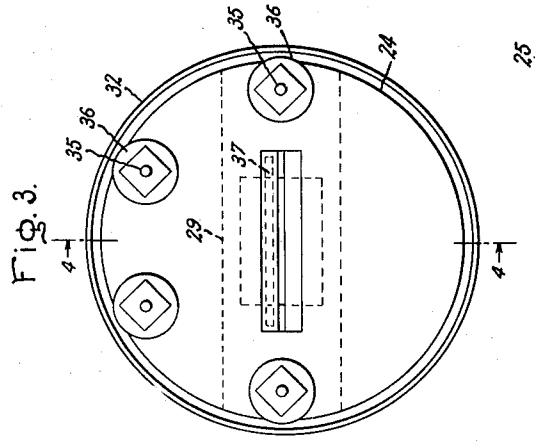

Fig. 3.

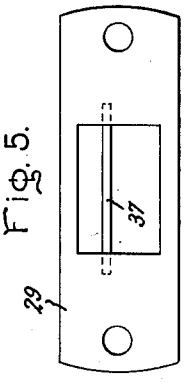

Fig. 5.

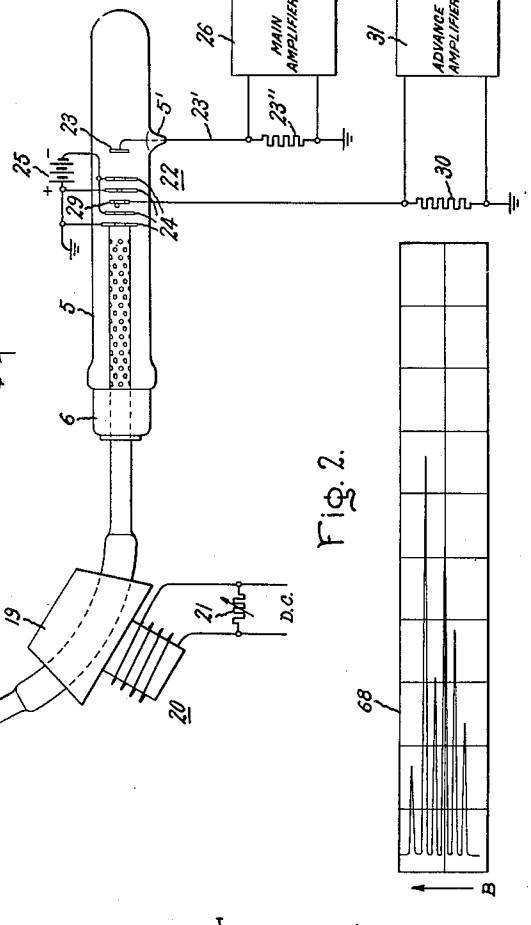

Fig. 1.

Fig. 2.

Inventor:
Joseph G. Neuland,
by Richard E. Hosley
His Attorney.

Dec. 23, 1952 J. G. NEULAND 2,623,179

MASS SPECTROMETER

Filed Nov. 23, 1948 2 SHEETS—SHEET 2

Fig. 6.

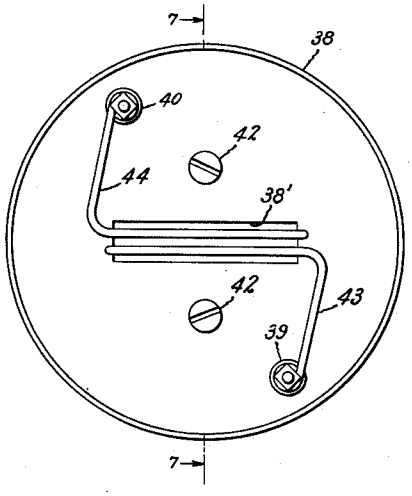

Fig. 7.

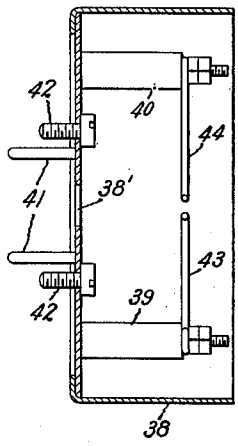

Fig. 8.

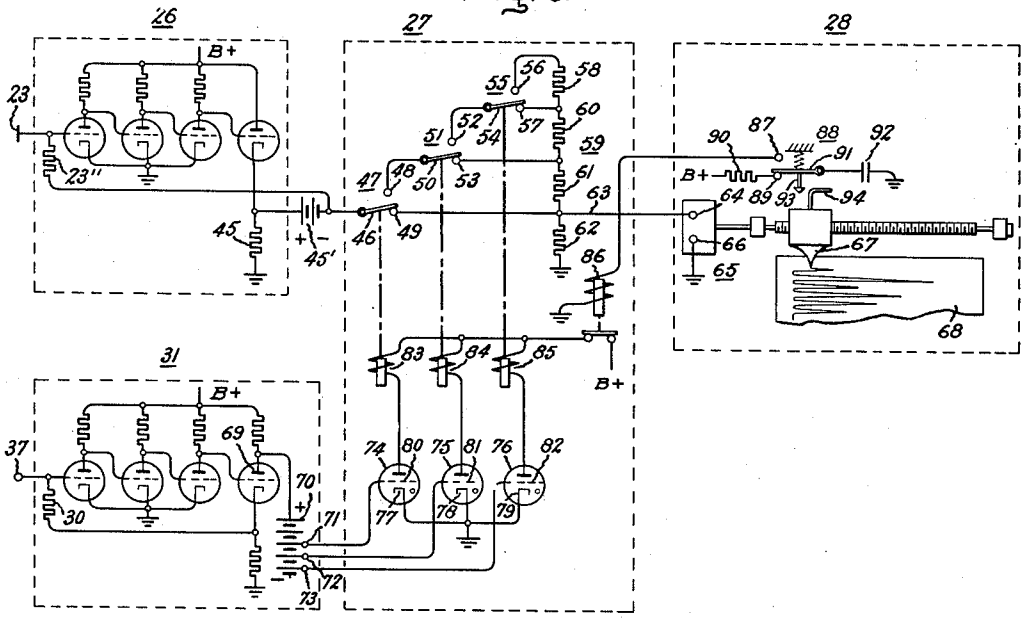

Inventor:
Joseph G. Neuland,
by Richard E. Hasley
His Attorney.

Patented Dec. 23, 1952

2,623,179

UNITED STATES PATENT OFFICE

2,623,179

MASS SPECTROMETER

Joseph G. Neuland, Scotia, N. Y., assignor to General Electric Company, a corporation of New York

Application November 23, 1948, Serial No. 61,627

5 Claims. (Cl. 250—41.9)

1

This invention relates to a mass spectrometer, and in particular to apparatus for obtaining a mass spectrum.

Primarily, a mass spectrometer is an apparatus for analyzing a material in gaseous form. A gas to be analyzed is introduced into an evacuated chamber at low pressure and ionized, generally by bombardment with a stream of electrons within an ionization chamber. The ions are accelerated and focused by an electrostatic potential into a beam which is formed of ions of heterogeneous mass-to-charge ratio. The beam of heterogeneous ions is projected through a strong magnetic field where it is separated into a plurality of beams, each of which is formed of ions of the same mass-to-charge ratio; i. e. each beam is homogeneous with respect to mass-to-charge ratio but the several beams are separated according to mass-to-charge ratio. After the beams emerge from the magnetic field, they are selectively discharged upon a collector electrode structure thereby generating ion currents which are proportional to the respective beam intensities. By means of indicating and/or recording apparatus, the ion currents are measured to determine the individual beam intensities.

In the mass spectrometer the relation of mass-to-charge ratio as a function of the control variables is as follows:

$$\frac{m}{e}=\frac{Kr^2H^2}{V}$$

where r represents the radius of the ion beam path within the magnetic field, H the strength of the magnetic field, and V the strength of the electrostatic field. From this relation it is easily seen that, if the variables H and V are maintained at given values, an ion beam having a certain mass-to-charge ratio will follow a definite radius. Similarly, other ion beams having different mass-to-charge ratios will follow paths of respective radii such that the above relation will be fulfilled.

When a sample has been introduced to the ionization chamber in a manner hereinbefore described, it is desired to obtain measurements of the intensities of each of the ion beams which have been resolved from the sample. This is most practically accomplished by constructing a vacuum envelope having a conducting portion curved on a fixed radius and adapted to be immersed in the magnetic field. The heterogeneous ions are projected into this portion, but only those having a mass-to-charge ratio such that their paths will conform to the radius of the

2

envelope will avoid being prematurely discharged upon the envelope. To further insure that only one homogeneous ion beam at a time will be measured, collector electrode structure is arranged in the path of the beams which pass through the curved portion of the envelope to receive only the beam which follows the proper path. Either the electrostatic field or the magnetic field may be varied to measure selectively and successively the separated beams. In this manner a convenient and relatively inertialess system for procuring a mass spectrum is realized.

In obtaining mass spectra, however, it is quite common to encounter samples from which beam intensities varying from 1 to 10,000 are produced. As has been heretofore mentioned, the beam intensities are generally measured by discharging the selected beams upon the collector electrode structure to generate ion currents, which may be measured by means of indicating or recording apparatus. It is easily seen that, if the measuring apparatus possesses a constant range, the resulting measurements will be inadequate even for the most inaccurate analysis. It is possible to install a manually adjustable range changing apparatus, but such an expedient requires the attention of an operator and causes considerable loss of time. Moreover, if recording apparatus is employed to secure a permanent record of the mass spectrum, confusing traces appear upon the chart.

Therefore, it is an object of this invention to provide automatic range changing apparatus for a mass spectrometer whereby beam intensities of widely varying magnitudes may be measured.

Another object of this invention is to provide means for recording automatically a mass spectrum and to obtain thereby a clean record which is easily interpreted.

It is a still further object of this invention to provide apparatus for obtaining in advance the intensity of the beam to be measured and to utilize this information for selecting the proper range for the instrument which measures the beam intensity.

Other objects of this invention will be apparent from the following description taken in connection with the accompanying drawing in which Fig. 1 is a partially schematic view of mass spectrometer apparatus suitably embodying the invention; Fig. 2 is a representation of a typical mass spectrum useful in describing the invention; Fig. 3 is a plan view of a preferred form of collector electrode structure utilized in a mass spectrometer embodying the invention; Fig. 4 is a

view in section taken on the line 4—4 of Fig. 3; Fig. 5 is a plan view of one of the electrodes of the collector electrode structure; Fig. 6 is a plan view of an alternative form of collector electrode structure; Fig. 7 is a view in section taken on line 7—7 of Fig. 6; and Fig. 8 is a wiring diagram of the preferred form of circuits employed to obtain a mass spectrum in accordance with the invention.

The mass spectrometer apparatus illustrated in Fig. 1 comprises a spectrometer tube referred to generally by the numeral 1. At the upper end of the tube is a glass envelope 2 which is attached to a metal analyzer tube 3 by means of a metal cup 4 having a temperature coefficient which permits vacuum-tight sealing between the envelope 2 and the tube 3. In a similar manner, a glass envelope 5 is attached to the lower end of tube 3 by means of a metal cup 6 to provide a vacuum-tight enclosure in conjunction with envelope 2. In order that the enclosure may be evacuated, suitable pumping apparatus may be attached to the arm member 7.

The gas sample to be analyzed is admitted to the evacuated enclosure through inlet tube 8, which directs the sample into the ionization chamber 9. Within the ionization chamber are a filament 10 and an electrode 11, commonly called the trap, which is maintained at a positive potential with respect to the filament 10 by a source of direct current indicated conventionally by battery 12. The filament 10 is connected to battery 12 through leads 13 and 14 and is thereby energized to emit electrons which are accelerated to trap 11. As the accelerated electrons traverse the ionization chamber between filament 10 and trap 11, they ionize by bombardment the gas molecules within the ionization chamber. The ionization chamber is connected to battery 12 by lead 15 and by a lead 16 to a potential divider 17 which is energized by a relatively high voltage source of direct current (not shown), and the ions are constrained to move downward out of the ionization chamber through the various accelerating and focusing electrodes 18 by a difference of potential existing between the ionization chamber and the uppermost of the electrodes 18. The accelerating and focusing electrodes 18 are connected to various points on the voltage divider 17 and perform the function of accelerating, collimating, and projecting the ion beam into the analyzer tube 3 which is maintained at ground potential. The openings shown in electrodes 18 permit the passage of the ions and give the desired electrostatic field configuration. It will be understood by those skilled in the art that the various potentials on the electrodes 18 as well as the potentials upon the electrodes within the ionization chamber may be varied in any convenient manner to provide the desired accelerated ion beam.

The ion beam projected into analyzer tube 3 is composed of ions of heterogeneous mass-to-charge ratio, and in order to provide a means for separating the beam into a plurality of beams, each being homogeneous with respect to mass-to-charge ratio, the analyzer tube 3 is curved in its center portion on a constant radius through approximately 60°. About the curved portion of the analyzer tube are placed pole pieces 19 of an electromagnet 20, which may be variably energized by a source of direct current (not shown) shunted by an adjustable resistor 21. The electromagnet provides a magnetic field whose lines of force traverse the heterogeneous ion beam to exert a force upon the individual ions, causing them to follow circular paths according to the equation hereinbefore expressed. When the ions emerge from the magnetic field, they are separated into individual ion beams which are homogeneous with respect to mass-to-charge ratio.

It will be understood that some of the ions which pass into the magnetic field will have a mass-to-charge ratio such that the force exerted upon them by the magnetic field will be insufficient to cause their paths to conform to the shape of the analyzer tube 3, and therefore they will be discharged upon the sides of the analyzer tube before they proceed through its entire length. Those of the ion beams which do conform to the shape of the analyzer tube 3 proceed to collector electrode structure 22. Since it is desired to measure only one of the separated ion beams at a time, collector electrodes 24 within structure 22 have openings which are arranged to admit selectively the beams to electrode 23, as will be more fully described in connection with Figs. 3 and 4. A source of direct current indicated conventionally by battery 25 is connected to electrodes 24 to suppress secondary electrons which may be produced by the ions striking collector electrode 23. The ions which strike or impinge upon the collector electrode 23 produce an ion current which is conducted through lead 23' and resistor 23'' to ground. Lead 23' may be brought through the envelope 5 by means of a glass-to-metal seal 5' arranged to support collector electrode 23. The ion current flowing through resistor 23'' produces a voltage which is amplified by main amplifier 26 and transmitted through a range changer 27 to a recorder 28. Since the ion current is proportional to the intensity of the ion beam striking collector electrode 23, the deflection of recorder 28 will also be proportional to the ion beam intensity, and therefore the desired measurement of a given ion beam intensity is obtained. It will be understood that the recorder 28 comprises a preferred form of measuring instrument to be employed, but that any current-responsive instrument may be substituted therefore without departing from the scope of the invention.

As has been heretofore explained, either the strength of the magnetic field traversing the ion beam paths or the accelerating voltage applied to divider 17 may be varied to produce a mass spectrum. In the preferred embodiment illustrated in Fig. 1, the strength of the magnetic field may be varied by adjusting resistor 21, while a constant voltage is applied to divider 17. It has been found that maintaining a constant accelerating voltage while varying the strength of the magnetic field will result in constant resolution over a wider spectrum, i. e. the ability of the spectrometer to measure selectively adjacent ion beams, will be constant over a greater range of mass-to-charge ratios. As the strength of the magnetic field is varied, ion beams having different mass-to-charge ratios will successively be swept across the collector electrode structure and will fall through the openings therein to electrode 23 to produce a trace upon the recorder 28. A typical mass spectrum which may be obtained in this manner is shown in Fig. 2, wherein the magnetic flux density is plotted along the abscissa, while the beam intensities are plotted along the ordinate. It is of advantage to employ a recorder to obtain the mass spectrum because the graph shown in Fig. 2 will then be traced out upon the recorder chart. Moreover, the rate of

varying of the magnetic field and hence the rate of sweep of the separated ion beams may be correlated with the rate of movement of the recorder chart to provide a means of identifying the particular ion beams within the mass spectrum obtained. Furthermore, the means for varying the magnetic field may be arranged to sweep automatically any portion of the mass spectrum in a manner well known to those skilled in the art. It will be observed that the mass spectrum shown in Fig. 2 contains peak beam intensities which may be conveniently recorded on a recorder having a single sensitivity range. However, frequently the peak intensities differ greatly as has been heretofore mentioned and, when recorded at a single range, they cannot be accurately determined. Therefore, in accordance with an important feature of my invention, a supplemental collector electrode **29** is provided within the collector electrode structure **22** (Fig. 1). This supplemental electrode performs the function of receiving each ion beam before it reaches collector electrode **23** and discharging it through a resistor **30** to ground. The ion current flowing through the resistor **30** produces a voltage which is amplified by advance amplifier **31** and transmitted to range changer **27**. The voltage fed into range changer **27** is effective to select the proper sensitivity for recorder **28** so that when the ion beam reaches collector electrode **23** and discharges thereupon, the recorder trace will be made to the proper scale. The details of the range changer circuit which operate in conjunction with recorder **28** will be more fully described in connection with Fig. 8.

For a better understanding of collector electrode structure suitably embodying the supplemental electrode **29**, reference is made to Figs. 3, 4, and 5 in which the electrodes corresponding to those shown in Fig. 1 are similarly identified. It will be observed that the collector electrode structure comprises an outer shield member **32** which may be attached to analyzer tube **3** by means of screws **33**. The dowel pins **34** are rigidly attached to the shield member **32** to provide a means for accurately locating the collector electrode structure with respect to the analyzer tube **3**. Plate-like electrodes **24**, formed of a conductive material such as Nichrome, are attached to shield member **32** by means of bolt members **35** and insulating spacers **36**. Spacers **36** are accurately ground from such materials as glass or quartz to provide a suitably exact configuration. Supported between two of the spacers **36** and two of the electrodes **24** is the plate-like supplemental electrode **29**. As may be noted, each of the electrodes is provided with an opening to permit the passage of ion beams therethrough to collector electrode **23**. In addition, the supplemental electrode **29** is provided with a wire-like member **37**, preferably of tungsten, traversing the opening therein.

The relative positions of the wire-like member **37** attached to supplemental electrode **29** and the opening in the electrode **24** which immediately follows the supplemental electrode in the direction of ion beam travel must be arranged such that, when the separated ion beams are swept across the collector electrode structure, a particular ion beam will strike the wire-like member **37** first and impinge with maximum intensity thereon before it falls through the following one of electrodes **24** to strike collector electrode **23**. The actual spacings will be determined by the width and the distance between adjacent ion beams. In general, it has been found that the distance between the adjacent edges of the wire-like member **37** and the opening in the following electrode **24** should be less than the distance between adjacent ion beams and at least half the width of an ion beam.

Although a preferred form of collector electrode structure has been shown in Figs. 3, 4 and 5, considerable structural simplification may be attained by structure such as that shown in Figs. 6 and 7. An outer shield member **38** supports insulating members **39**, **40** and may be attached to analyzer tube **3** by means of dowel pins **41** and screws **42**. Collector electrodes **43** and **44** are respectively supported by insulating members **39** and **40**. The electrodes **43** and **44** are wire-like in form and preferably consist of a conductive material, such as tungsten. The electrodes extend from their respective supports and traverse an opening **38'** in electrode **38**, which permits the passage of ion beams therethrough. The spacings between the electrodes should be arranged similarly to the manner in which the spacings between electrodes **37** and **24** mentioned in connection with Figs. 3, 4 are arranged. Although the electrodes **43** and **44** have been shown as traversing the opening **38'** in a plane spaced from and approximately parallel to the portion of shield member **38** which contains opening **38'**, they may be located in any suitable manner so long as their respective spacings permit each ion beam to strike first one and then the other. With this arrangement either electrode **43** or electrode **44** may be employed as the supplemental electrode hereinbefore described, depending upon the direction of bam sweep. In any event, one electrode will comprise the supplemental electrode while the other will comprise the electrode to which main amplifier **26** is connected. It may also be advantageous to place supplemental electrodes on either side of the electrode which is employed to measure the beam intensity, thereby permitting a reversal of beam sweep without extensive structural modification. In addition, if beam defining electrodes such as electrodes **24** (Figs. 3, 4) are required, plate-like members having openings therein may be placed ahead of electrodes **43**, **44**.

For suitable utilization of the ion beam currents from the hereinbefore described collector electrode structure, a circuit such as that shown in Fig. 8 may be employed, wherein components corresponding to those shown in Fig. 1 have been similarly identified. Collector electrode **23** is connected to the input of main amplifier **26** which may be a conventional direct current feed-back amplifier having an input resistor **23''** and an output resistor **45** in the cathode circuit of the last stage. The output of amplifier **26** is connected through a bucking battery **45'** to the movable arm **46** of a single-pole, double-throw switch **47** having stationary contacts **48** and **49**. Stationary contact **48** is connected to the movable arm **50** of a second single-pole, double-throw switch **51** having stationary contacts **52** and **53**. Stationary contact **52** is connected to the movable arm **54** of a third single-pole, double-throw switch **55** having stationary contacts **56** and **57**. Stationary contact **56** of the last named switch is connected to one end of a resistor **58** forming a portion of a resistance divider circuit **59** which comprises series connected resistors **58**, **60**, **61**, **62**. One end of resistor **62** is connected to ground while the other

end is connected to stationary contact 49 and to one end of resistor 61. The other end of resistor 61 is connected to stationary contact 53 and to one end of resistor 60, the other end of resistor 60 being connected to stationary contact 57. Lead 63 interconnects the upper end of resistor 62 and stationary contact 49 with one terminal 64 of the actuating element 65 of recorder 28, the other terminal 66 of the actuating element being connected to ground. Actuating element 65 serves to drive pen member 67 in response to a received signal to produce a trace on chart 68.

The supplemental electrode 37 is connected to the input of advance amplifier 31 which comprises a conventional feed-back amplifier having an input resistance 30. Connected to the plate 69 of the last stage of amplifier 31 is a battery 70 having taps 71, 72, 73. The positive terminal of battery 70 is connected to plate 69. Gaseous discharge devices 74, 75, 76 have cathodes 77, 78, 79 interconnected and maintained at ground potential and grids 80, 81, 82 respectively connected to taps 71, 72, 73 of battery 70. The plate circuits of discharge devices 74, 75, 76 respectively include magnetic relays 83, 84, 85 which are fed from a common source of plate voltage indicated conventionally by B+. The relays 83, 84, 85 are respectively effective when energized to actuate the movable arms 46, 50, 54 of switches 47, 51, 55. The source of plate voltage is fed through a magnetic relay 86 whose energizing circuit is connected to a stationary contact 87 of a single-pole, double-throw switch member 88. The other stationary contact 89 is connected through current limiting resistor 90 to the hereinbefore mentioned source of plate voltage B+. Movable arm 91 of switch member 88 is connected through capacitor 92 to ground and also has mounted thereupon a cam or projection 93 which is adapted to be contacted by a projection 94 upon pen member 67 of recorder 28.

As the separated ion beams are swept across collector electrode structure 22 (Fig. 1), each beam will strike first the supplemental electrode 37, thereby causing the output of advance amplifier 31 to vary accordingly. If the ion beam striking electrode 37 is relatively small, none of the discharge devices 74, 75, 76 will fire since their grids will not be driven sufficiently positive by the variation in the advance amplifier output. The ion beam then proceeds to fall through the electrodes 24 (Fig. 1) to strike collector electrode 23, thereby producing an ion current which appears as a voltage increment across output resistor 45 of main amplifier 26. This voltage is conducted through movable arm 46 of switch 47 which, in its normal position, is in contact with stationary member 49. Since stationary contact 49 is connected to resistor 62 and the input terminal 64 of recorder 28, the voltage appears across the input of recorder 28 and actuates pen member 67 to record a trace which is proportional to the intensity of the beam striking collector electrode 23.

If, however, the beam striking 37 has a relatively greater intensity, the voltage of tap 71 on battery 70 will become enough positive with respect to ground to cause discharged device 74 to fire, thereby energizing relay 83 and causing movable arm 46 to swing to stationary contact 48. Thereupon when this relatively more intense beam strikes collector electrode 23, both resistors 61, 62 will be in series with the output of main amplifier 26 appearing across resistor 45. Lead 63 interconnecting resistor 62 and the input terminal 64 of recorder 28 remains fixed and therefore only the proportion of the voltage which appears across resistor 62 will be fed into actuating element 65. It is quite evident that by this means the range of recorder 28 may be changed, and a larger signal may be measured without driving pen member 67 off scale. If more intense beams strike supplemental electrode 37, both discharge devices 74 and 75 will fire, thereby placing resistor 60 in series with resistors 61 and 62. Similarly, if still more intense beams are received, discharge device 76 will fire, placing resistor 58 in series with resistors 60, 61, 62.

After a particular beam has struck supplemental electrode 37 causing one or more of the discharge devices to fire and has passed on to collector electrode 23 to be measured, it is necessary that the discharge devices be extinguished in order that the correct range may be selected for the following beam. It will be observed that, as pen member 67 returns to approximately its zero position, projection 94 will strike the projection 93 on movable arm 91 of switch member 88. This causes capacitor 92, which has been charged by the B+ voltage supply while pen member 67 has been recording the beam intensity, to discharge through relay 86, thereby removing the B+ from the discharge devices 74, 75, 76 and extinguishing them. In this manner, range changer 27 is prepared for selecting the proper range of recorder 28 for the next beam which traverses the collector electrode structure.

To facilitate the identification of the range which has been selected by range changer 27 in order to measure a particular beam intensity, amplifier 26 may be adjusted at zero input to provide a small constant output. This will cause pen member 67 to assume a new zero position, and the range selected may be identified by the distance below the new zero to which pen member momentarily moves when the range is changed. As the pen member traces the peak intensity of the beam and returns to strike projection 93, those of discharge devices 74, 75, 76 which have been previously fired will be extinguished and the pen member will automatically assume the new zero position again.

While the invention has been described by reference to particular embodiments thereof, it will be understood that numerous changes may be made by those skilled in the art without actually departing from the invention. I therefore aim in the appended claims to cover all such equivalent variations as come within the true spirit and scope of the foregoing disclosure.

What I claim as new and desire to secure by Letters Patent of the United States is:

1. In combination: a fixed full scale sensitivity recorder having a movable recording member; a source of electrical impulses for energizing said recorder having an output responsive to an input signal; a voltage divider circuit having a portion connected across the input of said recorder; a plurality of switching means individually operable in response to different voltages to connect successively greater portions of said divider in series with said output of said source whereby the proportion of the impulses energizing said recorder may be changed; a second source of electrical impulses having an output variable in response to an input signal and being connected to said switching means to supply voltages for

operating said switching means, said voltages supplied by said second source being ineffective to operate said switching means to disconnect said divider portions after said portions have once been connected; means for supplying the same input signal first to said second source of impulses and thence to said first source of impulses whereby the correct proportion of the impulse resulting from said same input signal may be selected to energize said recorder to maintain said movable recording member on scale while recording the impulse resulting from said same input signal; and switching means operable in response to movement of said recording member for disconnecting said switching means before another input signal is supplied to said second and first sources of impulses.

2. A system for recording impulses having a wide range of amplitudes comprising a fixed full scale sensitivity recorder having a movable recording member, a source of electrical impulses for energizing said recorder having an output responsive to an input signal, a voltage divider circuit having a portion connected across the input of said recorder, a plurality of grid-controlled gaseous discharge devices individually operable when conducting to connect successively greater portions of said divider in circuit with said output of said source whereby the proportion of the impulses energizing said recorder may be changed, a second source of electrical impulses having an output variable in response to an input signal and being connected to the grids of said discharge devices to cause each of said discharge devices to conduct at different impulse amplitudes, means for supplying the same input signal to said second and first sources of impulses in respective time sequence whereby the correct proportion of the impulse resulting from said same input signal may be pre-selected to energize said recorder to maintain said movable recording member on scale while recording the impulse resulting from said same input signal, and switching means operable in response to movement of said recording member for rendering said discharge devices non-conducting before another input signal is supplied to said second and first sources of impulses.

3. A system for recording impulses having a wide range of amplitudes comprising a fixed full scale sensitivity recorder having a movable recording member; a source of electrical impulses for energizing said recorder having an output responsive to an input signal; a voltage divider having a portion connected across the input of said recorder; a plurality of grid-controlled gaseous discharge devices having current responsive relays in the plate circuits thereof, said relays being individually operable to connect successively greater portions of said divider in circuit with said output of said source whereby the proportion of the impulses energizing said recorder may be changed; a second source of electrical impulses having an output variable in response to an input signal and being connected to the grids of said discharge devices to cause each of said discharge devices to conduct at different impulse amplitudes; means for supplying the same input signal to said second and first sources of impulses in respective time sequence whereby the correct proportion of the impulse resulting from said same input signal may be pre-selected to energize said recorder to maintain said movable recording member on scale while recording the impulse resulting from said same input signal; and a relay operable in response to the movement of said recording member for removing the plate energization from said discharge devices before another input signal is supplied to said second and first sources of impulses.

4. In mass spectrometer apparatus having an analyzer tube for separating a beam of ions of heterogeneous mass to charge ratio into beams of homogeneous mass to charge ratio, the improvement which comprises collector electrode structure attached to said analyzer tube including a first conducting plate-like member having an opening therein; a second conducting plate-like member insulatingly supported substantially parallel to and adjacent said first member, said second member having an opening therein of smaller cross-sectional area than the opening in said first member aligned with a portion of said last-named opening; and a wire-like conducting member attached across the opening in said first member adjacent the portion aligned with the opening in said second member.

5. In mass spectrometer apparatus having an analyzer tube for separating a beam of ions of heterogeneous mass to charge ratio, the improvements which comprises collector electrode structure attached to said analyzer tube including a first conducting plate-like member having an opening therein; a second conducting plate-like member insulatingly supported substantially parallel to and adjacent said first member, said second member having an opening therein of smaller cross-sectional area than the opening in said first member aligned with a portion of said last-named opening; a wire-like conducting member attached across the opening in said first member adjacent the portion aligned with the opening in said second member; and a third conducting plate-like member insulatingly supported adjacent said second member on the side opposite that adjacent which said first member is supported, said third member having a portion of its surface aligned with the opening in said second member.

JOSEPH G. NEULAND.

REFERENCES CITED

The following references are of record in the file of this patent:

UNITED STATES PATENTS

Number	Name	Date
2,138,928	Klemperer	Dec. 6, 1938
2,380,439	Hoskins et al.	July 31, 1945
2,396,949	Harries	Mar. 19, 1946
2,470,745	Schlesman	May 17, 1949
2,476,005	Thomas	July 12, 1949