United States Patent [19]

Majkrzak et al.

[11] **3,819,889**

[45] **June 25, 1974**

[54] **HIGH VOLTAGE TRANSFER SWITCH**

[75] Inventors: **Charles P. Majkrzak,** Nutley; **Stephen F. X. Sladowski,** Bayonne, both of N.J.

[73] Assignee: **International Telephone and Telegraph Corporation,** Nutley, N.J.

[22] Filed: **Jan. 29, 1973**

[21] Appl. No.: **327,266**

[52] **U.S. Cl.** ..... **200/48 R,** 174/73 R, 174/127, 200/163

[51] **Int. Cl.** **H01h 31/00**

[58] **Field of Search**..... 200/48 R, 163, 16 E, 16 F, 200/153 P; 174/73, 127

[56] **References Cited**

UNITED STATES PATENTS

2,813,179	11/1957	Rugg	200/163
3,102,161	8/1963	Raisbeck	174/127
3,562,465	2/1971	Turgeon	200/163

Primary Examiner—Robert K. Schaefer
Assistant Examiner—William J. Smith
Attorney, Agent, or Firm—John T. O'Halloran; Menotti J. Lombardi Jr.

[57] **ABSTRACT**

There is disclosed a high voltage, r.f., multi-contact switch assembly capable of sustained reliable operation in a severely space-restricted environment even when subjected to at least one steep voltage gradient in addition to that existing directly across the switch gap, which secondary voltage gradient arises from unrelated equipments arranged closeby. The entire arrangement is designed, and the various elements thereof individually possess a design shape and composition, to relieve electrical stress and prevent high voltage creepage and corona discharge. To this end, a stationary subassembly and a corresponding rectilinearly movable subassembly are maintained always in substantially a parallel plate arrangement, each subassembly having a corona shield which houses a matable contact block arrangement, the front surface of the corona shield providing the parallel plate engaging surfaces. One of the corona shields is spring-mounted for backwards discplacement of predetermined amount upon engagement of the switch subassemblies, which backward movement bares its plurality of contacts for engagement with those of the other subassembly. A single across-the-gap structural member is provided to ensure stability and alignment of the switch, which member is constructed of a teflon-jacketed, silicone-bonded fiberglass cylinder capped at each end by corona shields. The assembly rests on a base of silicone-bonded fiberglass and supports in place the stationary or "hot-side" subassembly in a special rounded-edge relationship designed to further distribute electrical stress.

24 Claims, 15 Drawing Figures

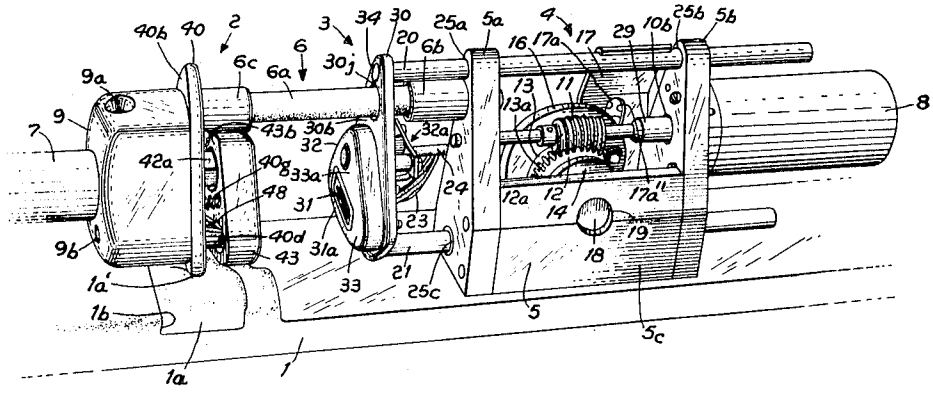

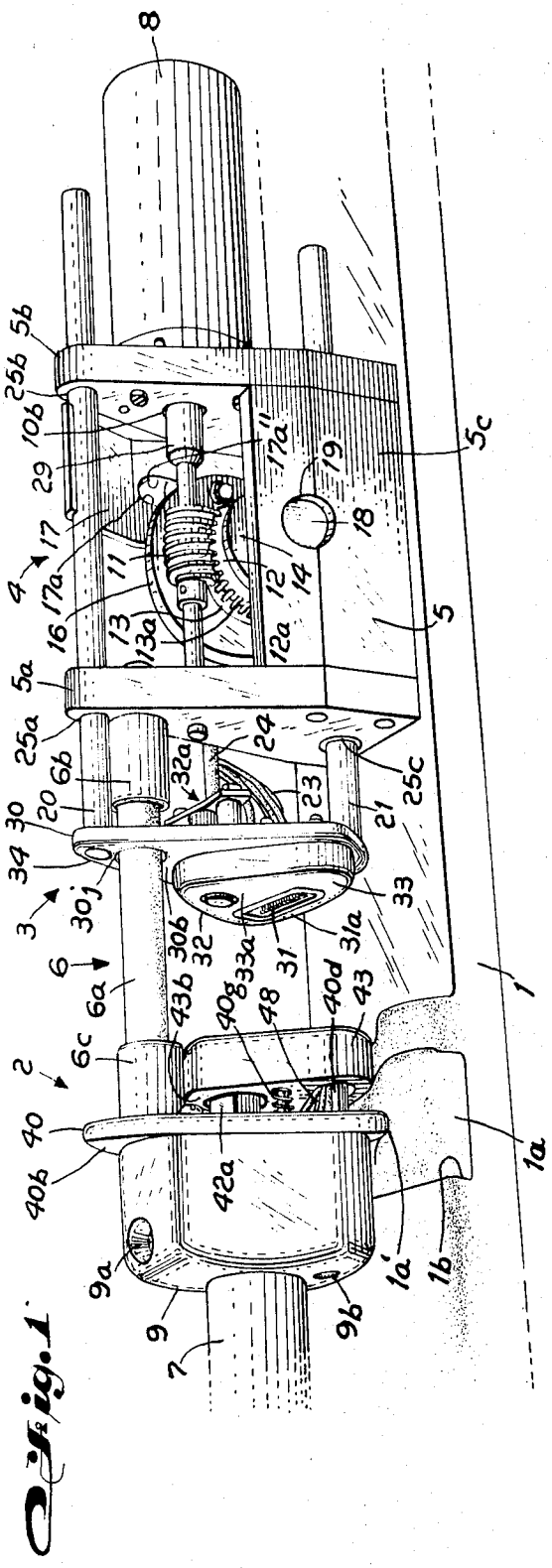

Fig. 1

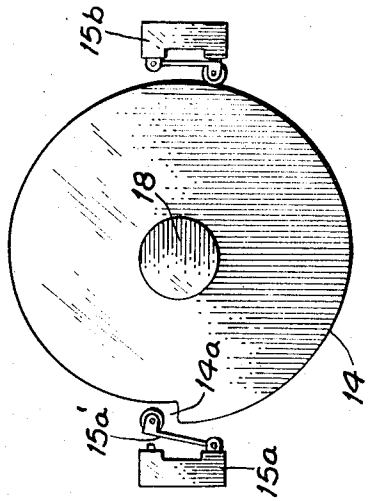

Fig. 2A

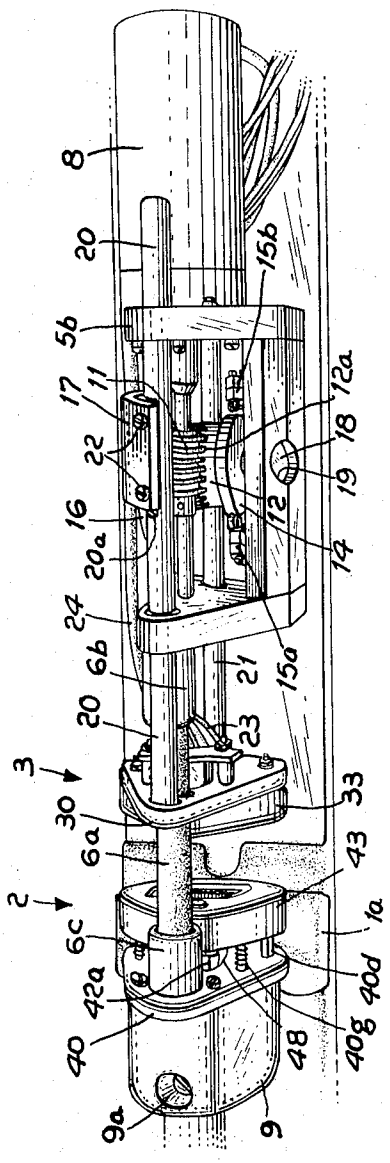

Fig. 2

Fig. 3

Fig. 7C

Fig. 7B

Fig. 7A

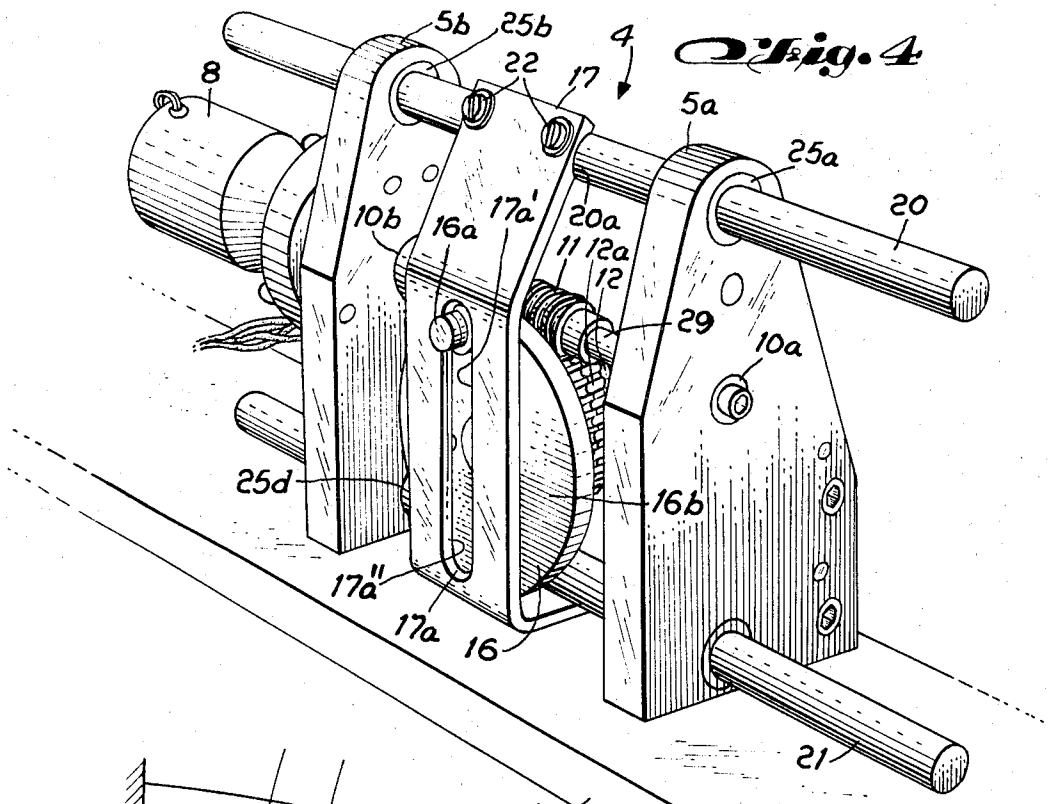
5b
25b
22
17
4
8
5a
25a
20
10b
16a
17a'
20a
11
12a
12
29
10a
25d
16b
17a''
17a
16
21

Fig. 4

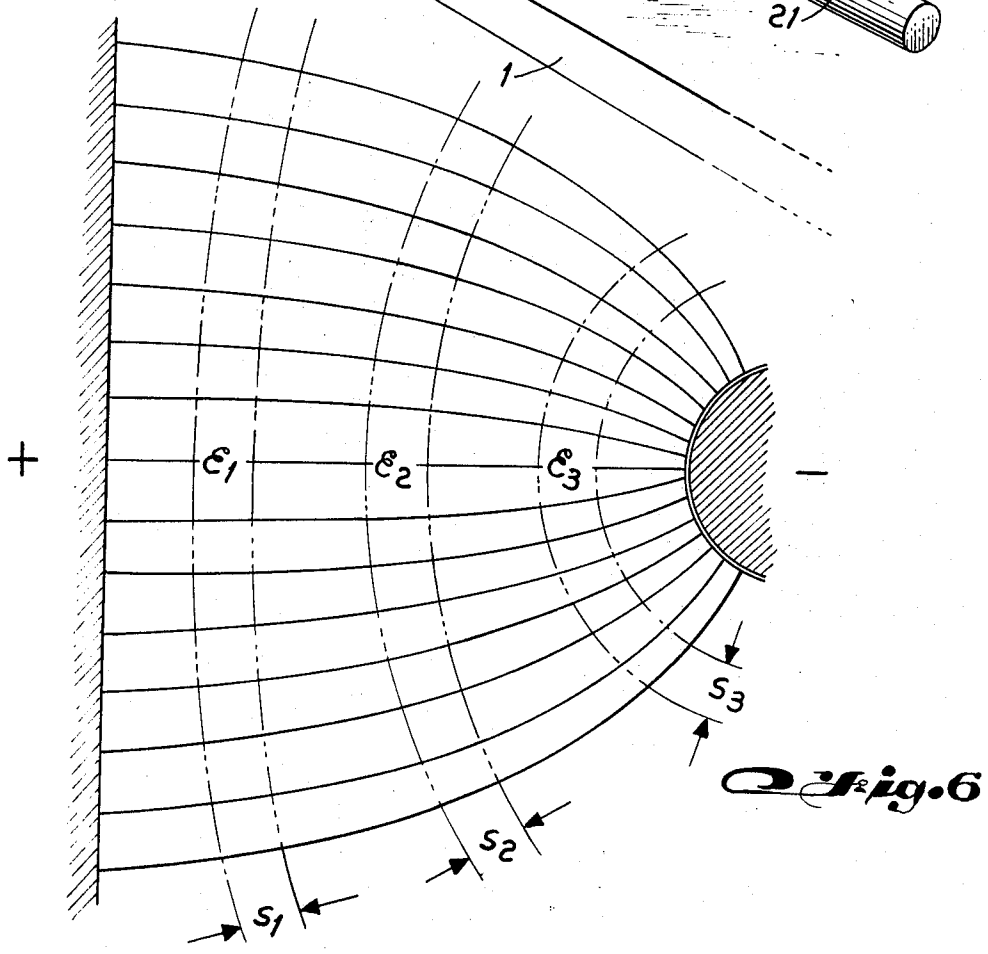
1
+
ε1
ε2
ε3
−
s3
s2
s1

Fig. 6

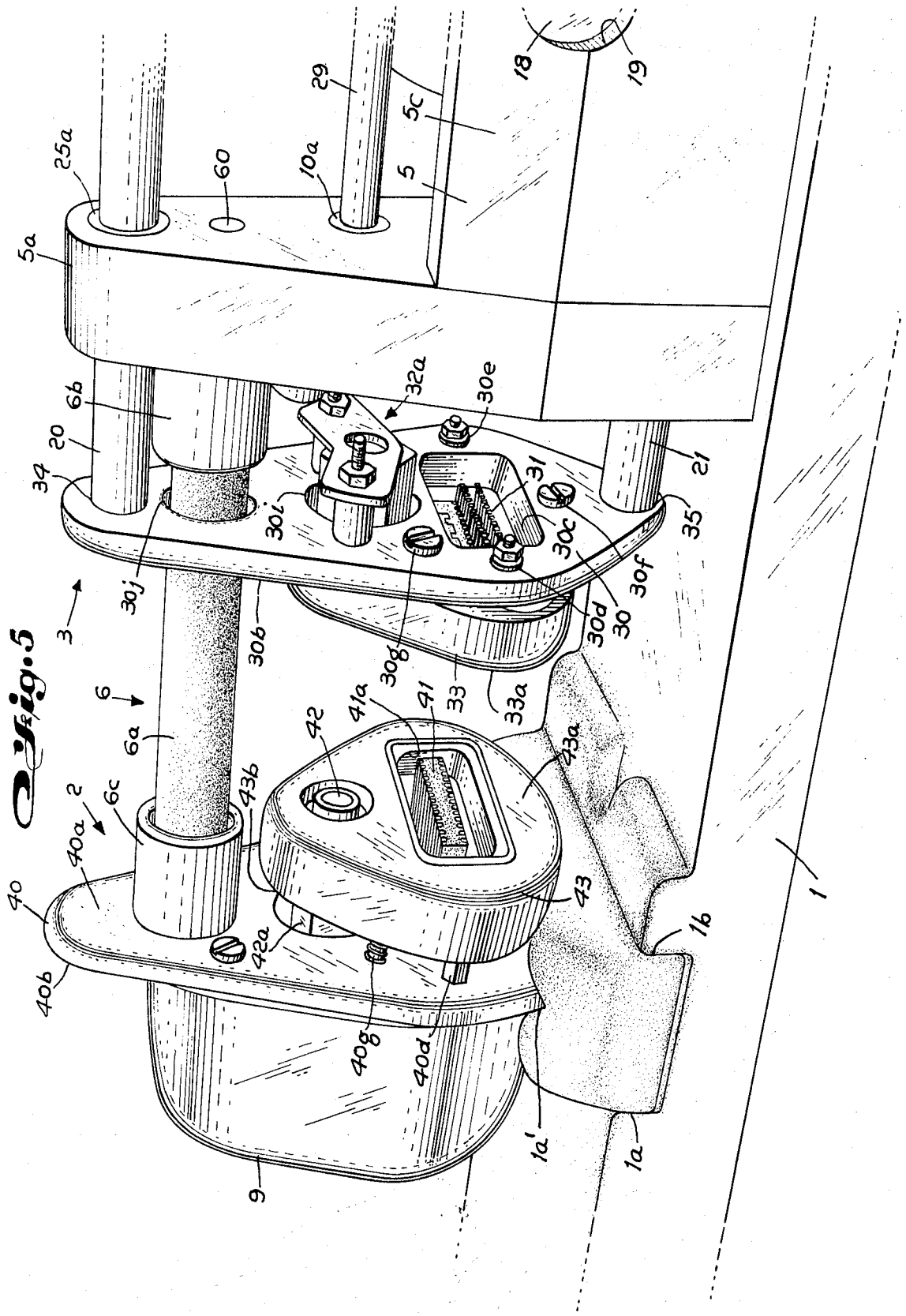
25a
60
10a
29
5c
5
18
19
5a
6b
20
34
32a
30e
21
31
30i
30c
35
30f
30j
30
30d
3
30b
30g
33
33a
6
6a
42
41a
41
43a
2
6c
43b
40a
40
43
42a
1b
40b
40g
40d
1a'
1a
9
1

Fig. 5

Fig. 8A

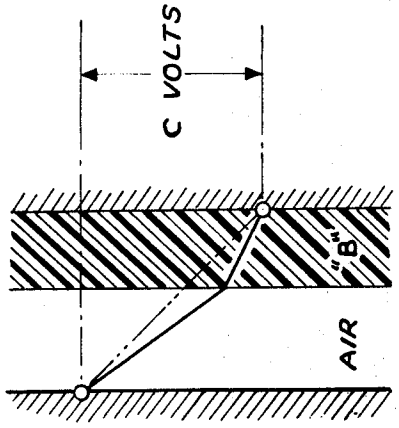

Fig. 8B

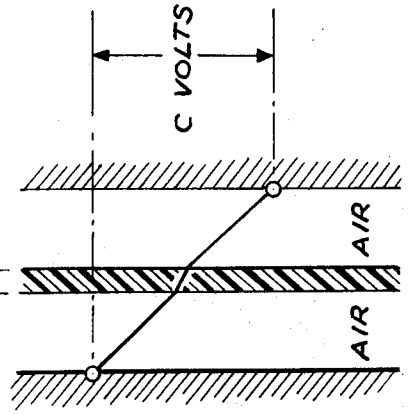

Fig. 8C

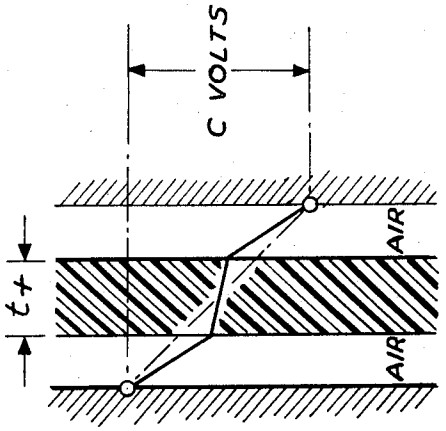

Fig. 8D

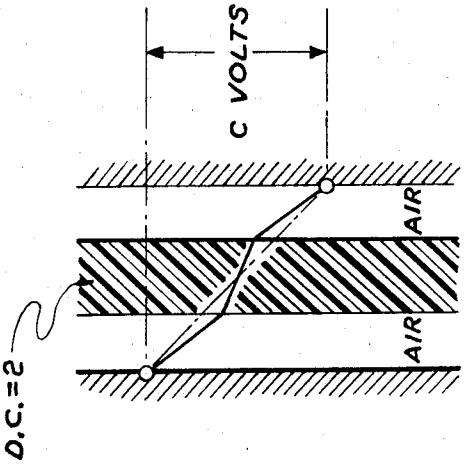

Fig. 8E

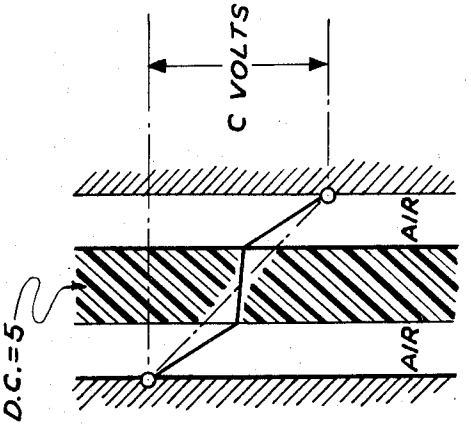

HIGH VOLTAGE TRANSFER SWITCH

BACKGROUND OF THE INVENTION

This invention relates to high voltage switches, and more particularly to a multi-contact, r.f., high voltage switch having a stationary subassembly and a rectilinearly movable subassembly for engaging the former, in which the switch is subjected to more than one extremely steep voltage gradient, and in which at least one structural piece is required to be coupled directly between the switch subassemblies, primarily serving the functions of alignment and structural stability in ensuring proper engagement and disengagement of the switch.

Such switches are already known to the art, and have perhaps their most demanding application, in terms of minimal size construction, very high switch potentials and high power transmission, and possible electrical interaction with surrounding structure, in the antenna mast of a modern submarine, wherein all communications and perhaps radar as well are associated therewith. This becomes apparent when one considers the various different operating voltage potentials (typically in the range of very-low V to many KV) which are coupled along a mast of very limited cross-section of their respective antennas, and high level of power being handled (typically in the range of very-low KW to several KW), and yet must remain electrically isolated and reasonably cool. In such complex and closely quartered electrical considerations, it becomes necessary in certain instances to open (render inactive) some of the conductive paths carrying the variously ranged voltages (r.f. and otherwise) while utilization of others is undertaken. The rendering of certain of these conductive paths inactive, therefore, requires one or more switches, which, if carrying high voltages and are situated electrically close to but not directly associated with other structures and potentials, must be designed and constructed to sustain operation in the high voltage and high power environment. Thus from the above, it becomes clear that a complex switch (one having several different operating voltages thereacross and situated in a severe and complex r.f. electric field and having different kinds of contacts associated therewith) may itself have very high voltage across its subassemblies by virtue of one or more of its plurality of contacts, and at the same time be electrically close to other structures carrying widely differing potentials present nearby on closely passing conducting paths. As some of these potentials are associative to r.f. radiation, additional considerations relative to the construction of the high voltage switch come into play. The very high potential differences which arise from the structure close by but not directly associated with the switch present at least a second high voltage gradient consideration which cannot be ignored if corona discharge or dielectric breakdown or excessive heating of parts is to be prevented, the initial high voltage gradient of course being directly across the switch itself.

At the very high potentials with which we are here concerned, the shape of each switch element or part and also its composition, as well as its spacing from other objects, related as well as unrelated, are all of primary importance in the successful design and construction of a switch for operation in the exacting environment eluded to above. Overlooking any one of the above factors will invite high voltages to find a creepage path or to break down a dielectric or to precipitate corona discharge or will encourage dense r.f. electric fields to generate excessive heat, the result of which, of course, eventuates in the destruction of the switch and/or the structure closeby.

The switches previously constructed to operate under circumstances, such as the exacting environment above-described, have failed to sustain under even regular operation, particularly with high r.f. voltage and power, because either the design shape or composition of the individual elements, or their physical relationship largely in terms of spacing or separation have actually contributed to corona discharge or to dielectric or creepage breakdown. The overall problem has been compounded, moreover, by the number of possible paths (intended as well as unintended) which exist for current flow. The known prior art switches require, for example, that in addition to its base, at least two permanent across-the-gap structural pieces be directly coupled between the moving and stationary switch subassemblies in order to maintain alignment and structural stability in engaging and disengaging the switch. Elimination of just one of these unintended paths for possible current flow would of course greatly reduce the possibilities of high voltage breakdown.

The known prior art has also failed to properly consider the possibilities which may result from a second high voltage gradient operating on the switch, or that the closeby but unrelated structure, such as the general mast structure, i.e. the surrounding radome (notwithstanding its general non-conductive properties), in the above-cited example environment, quite possibly offers a potentially disasterous path for current flow. Thus, if contact with or close separation from such structure must be tolerated due to exacting space limiting requirements and proper alignment and operation, the switch must be designed and constructed to minimize these hazards.

Many additional problems quite simply arise in the design and construction of a high voltage switch which are related solely to the potentials immediately across the gap of the switch itself, and which do not figure so importantly in the external environment of the switch. These problems are primarily the result of having a plurality of different contacts being engaged and disenaged simultaneously, and the electrical and physical symmetry which necessarily plays a part therein. Consideration of the kinds of contacts to be mated as well as the physical arrangement thereof relative to each other becomes extremely important as high r.f. voltages and power, and at sensitive low r.f. power. The fact that different kinds of connectors are to be used is a factor that cannot be ignored in the contact-arrangement switch design. If a multi-contact switch with diverse types of contacts isn't symmetrically designed in the physical sense, the frictional, inertial and mechanical considerations which arise in he operation of the switch will result in one side of the movable subassembly engaging and disengaging easier and faster than the other, which would necessitate an increase in undesirable across-the-gap structural members thus giving rise to an increased possibility of damaging arc through creepage breakdown.

Since configuration of particular mating contacts are dependent upon the electrical requirements of frequency, impedance, voltage and current ratings, they

offer an irregular physical and electrical outline when combined and mounted as arrays on opposing switch elements. Such outlines readily tend to concentrate intense electrical fields at the most projecting and sharpest components thus limiting the power-handling capability of the switch by undesirable corona discharge. To extend the power-handling capacity of the switch, these irregular outlines have been electrically neutralized through the use of parallel-plate type of corona shields. The validity of the above is immediately realizable when one considers the uniform distribution of electric field and the uniform potential gradient in a parallel plate situation (uniform separation) as compared to the case where electrical stress concentrations and varying potential gradients are caused by irregular opposing surfaces and projections. The result is a concentration of the electric intensity (higher voltage gradient) in the area of closest separation and at projections of sharpest features. Whereas the separation of the parallel plates was sufficient to enable the air dielectric therebetween to sustain the required potential across the plates, exposed contact configurations gave rise to a sufficiently increased voltage gradient in the area of closest separation and at sharpest corners to cause a rupture of the intervening dielectric at lesser than required power. Thus, it is demonstrated that the two subassemblies, for best protection, should engage and disengage in a parallel plate configuration, and that this may only be ensured by designing switch subassemblies to have complete physical symmetry to balance out frictional and other factors which would require additional supports and would tend to alter the parallel plate relationship upon disengagement of the switch. Thus the known prior art has failed to provide successfully in high voltage switches. To accomplish this, it is important to realize that the movement of the movable switch subassembly is intended to be rectilinear along the switch axi running perpendicular to the gap between the subassemblies, otherwise the parallel plate relatiionship would be lost.

SUMMARY OF THE INVENTION

It is therefore the general object of this invention to overcome the deficiencies above-indicated in the prior art, particularly in situations offering the exacting environmental conditions described above.

It is another object to do so while improving reliability of substantially every switch element both electrically and physically, with reliability being maintained even in the presence of secondary high voltage gradient considerations and in high-power electrical fields.

It is a further object to accomplish the above while providing substantial savings in terms of size.

It is yet another object to provide operative safety means which ensure proper switch engagement and full disengagement by controlling the movable switch subassembly between well defined limits.

It is yet a further object to provide a switch whose design creates a two-fold mechanical advantage for overcoming inertia and contact friction upon disengagement, thus providing the reduced energy requirements regarding the motive means controlling the separation of the switch subassemblies.

According to the broader aspects of the invention, there is provided a high voltage switch assembly having a pair of subassemblies arranged for relative movement to effect engagement and disengagement thereof, wherein the subassemblies have respective engageable front surfaces maintained in parallel plate configuration, each fsaid front surface defining at least one aperture by way of which there is accessible a plurality of matable contacts symmetrically arranged in at least one correspondingly shaped contact block about a vertical plane of symmetry passing through the principal (longitudinal) axis of the switch assembly.

The invention provides a high voltage switch assembly comprising a stationary subassembly arranged relative to the principal axis of the switch assembly to include a corona shield, housing a first plurality of switch contacts and having a design shape for reducing high potential gradients and distributing concentrated electric fields, the stationary subassembly corona shield defining a broad substantially flat front surface perpendicular to the principal switch assembly axis and having an aperture therein for access to the first plurality of switch contacts, the first plurality of contacts being symmetrically arranged about a vertical plane of symmetry passing through the princpal switch axis to provide a balanced mechanical loading relative to this axis; a rectilinearly movable subassembly arranged relative to the principal switch axis to provide a corona shield housing a second plurality of switch contacts capable of mating with said first plurality of contacts upon engagement of the subassemblies, the movable subassembly corona shield having a design shape for reducing high potential gradients and distributing concentrated electric fields and defining a broad substantially flat front surface parallel to the front surface of the stationary subassembly corona shield and having an aperture therein for access to the second plurality of switch contacts which in turn are symmetrically arranged about the vertical plane of symmetry passing through the principal switch axis; and a single member connected between the switch subassemblies for providing structural stability and alignment to the switch assembly, this single member including a teflon-jacketed silicone-bonded fiberglass rod of circular cross-section and being coupled to the switch subassemblies respectively by way of a metallic corona shield at each end thereof, the single meber being arranged parallel to the principal switch axis to ensure proper alignment for subassembly engagement and disengagement.

The corona shield of the stationary subassembly is mounted to a subassembly base portion by way of a plurality of symmetrically arranged spring mechanisms. This is to enable the stationary subassembly corona shield, hereinafter also called the pressure corona pad, to be depressable or displaceable backwards along the principal axis a small predetermined distance in the course of engagement with the corona shield of the movable subassembly, hereinafter also called the fixed corona shield, to "expose" and contacts the former houses for engagement with the movable subassembly's contacts. In this way, physical and electrical contact between the pressure corona pad and the fixed corona shield is made before separation between the two sets of contacts has been reduced to the point of actual contact. Also, on switch disengagement, physical and electrical contact between the front surfaces of the subassembly corona shields is maintained until the contacts of the subassemblies have separated, to provide maximum switch protection.

The stationary subassembly is seated in a block of silicone-bonded fiberglass, wherein the intercontacting

areas of the two are designed to effectively distribute electric fields and to reduce voltage gradients. This block is in turn form-fitted into a base of silicon-bonded fiberglass which also runs beneath the movable switch subassembly to form a base as well for the structure associated with the movable subassembly. This base is the principal dielectric separation between the switch and unrelated equipments and potentials running adjacent to and closeby the switch assembly, which give rise to possible secondary high-voltage gradient and high-power coupling considerations, and unwanted paths for possible current flow.

BRIEF DESCRIPTION OF THE DRAWINGS

The above-mentioned and other objects and features of the invention will become more apparent and the invention itself will be best understood by reference to the following description taken in conjunction with the accompanying drawings, in which:

FIG. 1 is a perspective side view of a high voltage, multi-contact r.f. switch assembly according to the invention;

FIG. 2 is a top view of the switch assembly of FIG. 1;

FIG. 2A is a schematic diagram of a portion of the motive means included in the switch assembly of FIGS. 1 and 2;

FIG. 3 represents an opposite side perspective view of the switch illustrated in FIG. 1;

FIG. 4 is an enlarged perspective view of the motive means of the switch assembly illustrated in FIG. 1;

FIG. 5 is an enlarged perspective view of the switch subassemblies of the switch according to FIG. 1;

FIG. 6 is an illustration of the varying ϵ field between two conductors wherein one conductor is convexly deformed;

FIG. 7A–7C further represent ϵ field distribution between two conductors; and

FIGS. 8A–8D illustrate the effect of various dielectric shapes and positions on the potential gradient between two parallel plates.

DESCRIPTION OF THE PREFERRED EMBODIMENT

Before proceeding with the detailed description of the invention, it is deemed advisable to consider the phenomena and problems of high voltage breakdown, which are surprisingly little understood and all too often overlooked by practitioners in the art.

When two conductors of simple configuration are electrically subjected to unlike charges in vacuum or air, a resultant force is exerted between them that is proportional to the product of the charges and inversely proportional to the square of the distance between them.

$$F\alpha\ (q)\ (-q)/r^2$$

The space in which component forces act to produce this resultant force is the dielectric field comprising lines of flux. The pattern for such lines is determined by the resulting direction1of force acting upon a charged particle when placed at points in space and under the influence of the charged conductors. Such lines of flux always flow from and into solids in directions that are perpendicular to their surfaces.

The electric intensity ϵ at any point of the dielectric field in vacuum or air is a measure of the force which would act upon a charged particle placed at that point. The product of the electric intensity, ϵ in a uniform dielectric field, such as that found between charged conductors of parallel plate configuration, and having s separation between plates, yields the difference in electrical potential, v, between the plates.

$$\epsilon \cdot s = \text{v and } \epsilon = v/s$$

ϵ, therefore, is also a measure of potential gradient or voltage gradient at any point in this dielectric field.

With these initial facts, we are able to consider certain classic cases in developing a practical analysis of high voltage breakdown. For example, consider a parallel plate configuration with a constant voltage across the plates and a variable air gap s therebetween. The intent here is to demonstrate that, as s decreases, the voltage gradient increases. Sufficient decrease in s produces a critical voltage gradient within the air to break down its insulating property. This critical voltage gradient measures the dielectric strength of air.

In a first chosen s, where the voltage gradient in the air gap may be considered within the dielectric strength of air. The air insulates and maintains the electrical potential between the plates. However, voltage gradient increases with decreasing s and approaches the critical value for breakdown of air or the limit of its dielectric strength. When $s \approx$ critical s, the air breaks down permitting an electrical discharge to occur between the plates. This critical voltage gradient has, therefore, measured the dielectric strength of air.

Thus, the dielectric strength of an insulating material, such as air in this case, is the maximum potential gradient that the material can withstand without rupture. It is usually measured in volts per mil of insulation thickness. The critical voltage gradient for air, for example, is 75 volts per mil. This, however, is peak volts, or 1.41 × rms volts.

In viewing the above, it is also important to consider the related parallel plate case in which a constant air gap is maintained and a variable voltage is instead presented. It is readily demonstrated that an increasing voltage steepens the gradient and proportionally strengthens the electrostatic field in the air gap. Sufficient increase in voltage produces a critical gradient within the air (i.e. the electrostatic field reaches the critical density) to break down its insulating property. The corresponding strength in the electrostatic field also measures the critical point for air to break down. Voltage gradient, then, is proportional to field intensity.

It is most important to demonstrate te case wherein a constant air gap and constant voltage are maintained while variable contouring, at least on one of the opposed conductors, is employed. In varying the contour of one conductor from thegeneral parallel plate condition into say a dome shape of continuously decreasing radius, i.e. the dome becomes smaller and smaller, until the configuration of a needle point is reached opposite the other conductor (flat plate), it is demonstrated that a change from parallel-plate configuration tends to concentrate or to locally strengthen the electrostatic field. Sufficient change in contour causes concentrations beyond the critical density necessary to break down air.

In distorting one plate convexly as described in the immediate above, the electrostatic field distributes itself with increasing density over a smaller area on the

surface of the distroted plate. The field density in the air gap correspondingly increases as it approaches the surface. Sufficient distortion of the plate causes excessive field density in the air near its surface. The dielectric strength of air is then exceeded and the insulating air will rupture under the stress.

In distorting the plate considerably beyond its critical radius, the electrostatic field becomes so concentrated on its surface that, even though this distorted plate may be removed considerably farther from the plate of opposite charge, it will continue to cause local breakdown in the dielectric strength of air. The extremes of such distortion, a knife edge or a needle point, will readily breakdown the dielectric strength of air in its locale even when charged at a relatively low potential, say ten volts. This phenomena is known as Corona Discharge.

From FIG. 6, it may readily be seen, in view of $\epsilon \cdot s = v$ or $\epsilon = v/s$, that $s_1 = s_2 = s_3$ and $\epsilon_1 < \epsilon_2 < \epsilon_3$ and therefore $v_1/s_1 < v_2/s_2 < v_3/s_3$.

As indicated above, parallel plates, when charged, produce a uniform electrostatic field and a uniform potential gradient in theair between them, and that a configuration that causes a concentrated field upon its surface, such as convexing one of the parallel plates, also distorts the potential gradient so as to stee en it as it approaches that surface, since the potential gradient is proportional to the field density. Configurations that vary the field intensity in the space between them produce voltage gradients in this space that are proportional to the field intensity. That is, the denser the electrostatic field, the steeper the voltage gradient. See FIGS. 7A–7C in this regard. Portions of the gradient that exceed the critical slope will cause local breakdowns in the dielectric strength of air.

Once there is a breakdown in part of the air space, the discharge very quickly passes across the entire air gap. This is caused by the fact that ionization occurs that reduces the ability of the air to resist breakdown. Also, a discharge in a part of the gap causes the applied voltage to be impressed mostly across the remainder of the gap, thus raising the gradient thereat. This phenomena causes "run-away" conditions.

In yet another example situation, in this instance a parallel plate configuration of constant gap wherein the gap material is varied as is the voltage across the gap, it may be demonstrated that, although air is a very good insulator, it is not necessarily a good dielectric.

Voltage gradient in the air gap produced by a potential V_1 may be deemed to be within the dielectric strength of air and that therefore the air insulates the charge. The1voltage gradient produced by say V_2 is, however, to be deemed beyond the critical gradient and corona breakdown occurs. By placing another insulating material (gas, liquid or solid) in substitution for the air, it may be seen that breakdown will not occur under the potential gradient produced by V_2 but that this other dielectric B will carry considerable steeper gradients before its critical gradient, produced by said V_3, is reached.

Critical gradients for some common materials are given here:

	Volts/Mil
Air	75
Alsimags	200–250
Bakelites	275–375
Nylon	400
Polystyrene	500–700
Polyethylene	1200
Teflon (thin sheet)	1000–2000
Quartz	15,000

It is to be additionally noted that in lossy materials, such a bakelite, breakdown will occur due to another cause. With applied r.f. voltage, there is internal heating due to loss in the dielectric. In high power equipment, the temperature rise can be so great that the material will breakdown chemically to change itsphysical and electrical characteristics and may even explode due to therelease and entrapment of gasses. Heating phenomena and resulting effects must, therefore, be carefully considered in environmental conditions which particularly include high powered r.f.

Lastly, the case is illustrated in which a parallel plate configuration is presented with a constant gap and constant voltage thereacross, but in which laminated gap materials are employed, demonstrating that when more than one material exists within the gap, the voltage gradient assumes values within each particular material dependent upon its insulating quality. In the following, reference may be made to FIGS. 8A–8D. The voltage gradient within a gap insulated by a lone dielectric material, such as air, is of course uniform. By inserting an insulating material "B," along with the air dielectric, the original gradient is modified depending upon the insulating quality of "B" with respect to air. (FIG. 8A). The measure of this insulating quality in "B" is its dielectric constant. It measures the relative current displacement through the material when compared with air under similar conditions. The greater the dielectric constant, the less steep the voltage gradient through the material for a given r.f. current passing through it. In "poor" insulators or in those with very high dielectric constants, the gradient approaches the horizontal (i.e. a zero slope) when in series with air, as it would if the material were a conductor. The term "poor" of course depends upon the particular application.

Dielectric constant for some common materials are given herein:

Air	1.00
Alsimags	5.7–6.4
Bakelites	4.4–5.4
Nylon	3.0–3.7
Polystyrene	2.5–2.6
Polyethylene	2.2–2.3
Teflon	2.0–2.1
Quartz	3.7–3.8

A relatively thin insulator within the air gap does not appreciably modify the voltage gradient in the ar. A relatively thick insulator, however, may modify the voltage gradient in the air to cause its breakdown. See FIGS. 8B and 8C in this regard.

A good insulator within the aig gap does not appreciably modify the volage gradient in the air. A poor insulator, however, may modify the voltage gradient in the air so as to cause its breakdown. See FIGS. 8D and 8E in that regard.

An important application of this last example case is where a dielectric sheet is inserted between two plates to prevent breakdown. If this does not make good contact with the plates, the residual thin air gaps can have excessive gradient with resultant corona discharge.

Armed with all the above information, it may be appreciated more fully that the switch assembly to be described hereinafter in detail represents a substantial advance in the art.

Referring to FIGS. 1–5, there is illustrated an embodiment of the novel high-voltage, r.f.-carrying switch assembly according to the invention. The switch is shown arranged on a dielectric base 1 which separates the switch assembly from unrelated equipments carrying potentials which could give rise to secondary high voltage gradient considerations. The switch comprises a stationary subassembly 2 and a movable subassembly 3, with the latter's movement being controlled by a drive arrangement or motive means 4 which is substantially contained in a three-sided housing 5. Coupled between one of the end portions 5*a* of the housing 5 and the switch assembly 2 is a guide support or structural member 6 the primary function of which is to maintain alignmnt of the movable subassembly during switch engagement/disengagement as well as general structural support along the switch assembly's principal or longitudinal axis, which is to be considered as running substantially parallel to the base 1 andwhich direction is defined, at least in part, by the guide support 6 itself. The rear portion of the stationary subassembly 2 includes a back portion or cover 9 which is coupled to a conduit 7, housing the conductor lines running from the switch to the various equipments associated therewith, such as for example the antennas and related equipments contained in the mast of a submarine. In fact, it is well within the contemplated capability of this switch assembly to operate as a mode switch controlling, i.e. connecting and disconnecting, for example VLF/VHF/UHF/IFF functions in the submarine mast antenna assembly. Since a failure in the mode switch could cause a total loss in VLF/VHF/UHF/IFF performance, this switch must be highly reliable, particularly in view of other possible conductors, potentials and equipments unrelated thereto behind or beneath the base 1, which perhaps provide MH/HF antenna functions, and which subject the mode switch to secondary steep voltage gradients between the antenna "hot" elements and those switch elements at say ground potential.

The drive arrangement 4 is powered by an electric motor 8 coupled by way of a drive shaft 29, the latter being supported proximate either end by way of a bearing arrangement 10*a*, 10*b* in the opposite end portions 5*a*, 5*b* of thehousing 5. Arranged on the shaft 29 substantially centered between the housing end portions 5*a* and 5*b*, is a 37 worm" member 11. This worm member 11 is in continuous communication with cooperating teeth 12*a* on the periphery of rotatable cylinder 12, which is axially and fixedly attached to cylinder 13. Cylinder 12 is fixedly attached to a cylindrical disc 14 having a diameter substantially larger than cylinder 12, and having an angled recess 14*a* (FIG. 2A) in the periphery thereof so as to render this periphery a camming surface for a limit switch arrangement including a pair of microswitches 15*a*, 15*b* oppositely arranged about the disc 14. This limit switch arrangement will be more fully described hereinafter. Alternatively, disc 14 may be homogeneous with cylinder 12 in a unitary type construction.

Cylinder 13 is fixedly attached to or homogeneous with a second disc 16 having a diameter of predetermined dimension in accordance with the intended movement of the switch subassembly 3, of which a more explicit discussion is given hereinafter. Disc 16 in turn has a cylindrical protrusion 16*a* arranged on its outer broad surface (cross-sectional surface) 16*b* near the periphery of this surface, for engagement with a vertically oriented but horizontally-movable member or cross head 17 by way of a vertically running through-groove 17*a* therein, this arrangement having characteristic similarity to a so-called "scotch yoke" or "scotch crank" arrangement.

Discs 14 and 16, and cylinders 12 and 13 are all fixedly arranged in a single unit on a shaft 18 which is securely maintained in the position shown in FIGS. 1–4 by the insertion of one end thereof in a bearing aperture 19 of appropriate arrangement in the side wall 5c (FIG. 1) of the unitary housing 5.

Vertical member 17, as a flat but bent slotted piece, is arranged to be fixedly coupled proximate its top and bottom ends to respective shafts 20, 21 (see FIGS. 3 and 4 particularly). While any suitable coupling means may be here employed to secure the ends of member 17 to the shafts 20, 21, the illustrated coupling (the bottom coupling is not particularly shown) of the top portion of member 17 is achieved by placing same in a flat-bottomed channel or recess 20*a* in the shaft 20 and securing the two together by way of screws 22 engaged in corresponding threaded apertures in shaft 20. As vertical member 17 is intended to be horizontally displaceable, shaft 20, 21 fixedly attached thereto must also be capable of this movement. This is achieved by arranging shafts 20–21 to extend through bearing arrangements 25*a*, 25*b*, 25*c*, 25*d* of appropriate design proximate the top and bottom of both end pieces 5*a* and 5*b* of unitary housing 5. In fact, these bearings are symmetrically placed (i.e. centered on the broad flat faces of end pieces 5*a* and 5*b*) relative to the vertical axis of symmetry passing through the principal switch axis, for reasons eluded to hereinbefore, but which will be discussed in greater detail below.

Thus it is seen that the unitary three-sided housing 5 maintains all of the above-described component parts in a fixed working relationship to one another. Inasmuch as movable switch subassembly 3 is fixedly coupled proximate the top and bottom thereof to shafts 20 and 21, it too will be horizontally displaced as member 17 moves. Therefore, it is seen that by this mechanical arrangement for converting the rotational motion from the shaft of a motor to rectilinear motion, there is governed the engagement and disengagement of the switch. The principal advantage of this arrangement, i.e. motor-drive — "scotch yoke" — limit-switch assembly, over the prior art which typically employs a series arrangement of motor-drive — slide-crank — limit-switch, is a reduction in size, and therefore a substantial space saving, whichis a particularly critical commodity in any space-limited environment such as exists in the submarine mast example eluded to hereinbefore. Space reductions in the area of 33 percent have been achieved over the prior art by implementation of the above-described compact drive arrangement or motive means.

In operation, this compact drive arrangement provides controlled, reversible rectilinear movement of the switch subassembly 3 along the principal or longitudinal axis of the switch to effect engagement and disengagement thereof. Because of the above-defined problems arising from very high voltages, this movement must be such as to maintain the face of the movable subassembly 3 parallel to theface of its stationary counterpart 2. Hence the requirement that shafts 20 and 21 be parallel with and directly above and below the prin-

cipal switch axis. Also the interconnection of member **17** with shafts **20** and **21** must be such as to effect equal rectilinear movement as to both shafts. It is in this light that selection of appropriate bearings **25***a*, **25***b*, **25***c*, **25***d* is to be made.

It will be assumed for purposes of discussion that the switch is initially in its fully disengaged position. Actuation of the motor **8** causes the "worm gear" arrangement to simultaneously rotate cylinders **12** and **13.** This rotation of cylinder **13** causes disc **16** to rotate in the manner causing cylindrical protrusion **16***a* (FIG. **3**) to begin to "ride-up" the slot **17***a* in a member **17** from the initial (switch fully disengaged) position in the center of the slot **17***a*. In a well-known manner, as disc **16** continues to rotate clockwise (as viewed in FIG. **3**), cylindrical protrusion **16***a*, also undergoing rotational movement, begins to exert a force on the "leading" edge **17***a'* of the slot **17***a*, causing themember **17** to displace rectilinearly to the right and thus forcing switch subassembly **3** closer to its stationary mate **2.** Continued rotation of disc **16** finds protrusion **16***a* passing its high point of travel at the top of the disc (at **26** in FIG. **3**) wherein it has also reached its highest level in the slot **17***a*. Yet a further rotation then defines a downward motion of protrusion **16***a* in the slot **17***a* until the mid-point positioned therein is once again assumed. This "second quadrant" rotational motion of protrusion **16***a* on disc **16** also continues to provide a force on the leading edge **17***a'* of the slot **17***a* so as to maintain the rectilinear motion of switch subassembly **3** toward subassembly **2.** The diameter of disc **16** and the position of protrusion **16***a* thereon have been predetermined to provide the consequence that when protrusion **16***a* has rotated fully and exactly 180° from the above-mentioned initial or switch completely-disengaged position, i.e. has rotated to position **27** (FIG. **3**), movable subassembly **3** has fully engaged with stationary subassembly **2.** It is appropriate in approaching this position to interrupt the power to the drive motor **8** and to "brake" its motion, if necessary, so as to ensure that all motion of the moving parts ends with full switch engagement. This control is provided by the limit switch arrangement (see particularly FIGS. **2** and **2**a).

The arrangement of disc **14,** including the rotational position of the recess **14***a* thereof and its diameter are predetermined such that when the drive is closely approaching full engagement of the switch subassemblies, recess **14***a* has rotated to the position shown in FIG. **2,** wherein the trigger arm **15***a'* of limit switch **15***a* is permitted to extend beyond the periphery of the disc **14** so as to actuate a cutting-off of the power supplied to the motor **8.** The rotational position of recess **14***a* of course is settable by providing for the fixed relationship between the protrusion **16***a* on dsc **16** and recess **14***a* on disc **14** to be likewise settable, thus enabling optimum adjustment of this limit switch function in accordance with the overall physical, frictional and inertial characteristics of the switch assembly. It is seen that this control is automatically synchronized with the rectilinear motion produced, and both disc **14** and disc **16** are fixedly attached to or homogeneous with respective cylinders **12** and **13** which in turn are simultaneously driven by a common "worm" element **11.**

It is particularly to be noted that with the protrusion **16**a in the vicinity of position **27,** i.e. the fully engaged switch position, there is provided thereby a maximum mechanical advantage by way of the protrusion providing continuous but minimal rectilinear movement to switch subassembly **3** while operating through a comparatively large rotational displacement, in a manner inherent to this mechanical conversion arrangement. Thus the arrangement provides the greatest assist when it is needed most, i.e. when maximum friction occurs due to engaging switch subassemblies. This permits use of a motor having lesser power and torque requirements, which are translated into weight and space savings, so vitally important to exacting space-limiting environmental requirements such as the example situation of the submarine mast.

This maximum mechanical advantage likewise exists as of the first movement of protrusion **16**a past position **27** in its continuing clockwise rotation. Thus the maximum mechanical advantage is also provided when the static friction of engaged switch assemblies is greatest. As indicated, protrusion **16***a* is, relative to slot **17***a* in member **17,** at the midway point in the fully engaged switch mode, and will be moving downward in the continued clockwise rotation of the disc **16.** By this rotation protrusion **16***a* now begins to exert a force on the "lagging" edge **17***a''* of the slot **17***a*, thus forcing member **17** to the left in a likewise rectilinear motion. This motion, of course, is transmitted to the movable subassembly **3** by way of shafts **20** and **21,** causing a disengagement of the switch.

When a continued rotation of disc **16** has brought protrusion **16***a* to point **28** (FIG. **3**), it also has attained the lowest position in slot **17***a* and continues to exert a force on the slot's lagging edge **17***a''*. Yet a further rotation of disc **16** causes protrusion **16***a* to force member **17** further to the left until the switch begins to approach the fully disengaged position. At this point the other limit switch (FIG. **2***a*) comes into play. By this time, disc **14** has rotated to the point such that recess **14***a* has moved around to actuate limit switch **15***b*, and thereby again disengage the power to motor **8.** As before, the limit switch arrangement is adjustably arranged to shut off power at the time whereby the further residual motion of the mechanism due to momentum decays because of friction and from the natural damping of the arrangement, with the achievement of the fully disengaged position.

We proceed now to a discussion of the switch subassemblies and the electrical considerations relative thereto, in particularly referring to FIGS. **1** and **5.** Movable subassembly **3** comprises a backing plate **30,** a plurality of contcts **31, 32** mounted on the backing plate **30,** and a corona shield **33** also mounted to the backing plate. Backing plate **30** is fixedly coupled by any suitable means to shaft **20** and **21** near the top and bottom thereof at respectively **34** and **35.** The arrowhead-like shape of plate **30** is intended to provide a symmetrical arrangement about the imaginary vertical plane of symmetry running through the principal (longitudinal) axis of the switch assembly. Likewise, the corona shield **33** and the arrangement of the contacts **31, 32** as well strictly adhere to this symmetry to ensure a complete structural balance for minimizing differing voltage gradient concentrations across the gap between the subassemblies, as caused by a structural overloading on one side of the imaginary plane of symmetry or the other. The arrangement thereby also prevents mechanical distortion because of unequal loading due to unsymmetrical design arrangement. The contact symmetry about

this vertical plane of symmetry enables substantially the same (balanced) static friction to be overcome on either side of the plane, thus enabling the switch subassemblies to maintain a parallel plate configuration between respective corona shields **33** and **43** upon disengagement of the subassemblies, the advantages and relative necessity of which configuration have already been reviewed hereinbefore. Moreover, in distributing the various switch elements so as to have the outermost portions thereof equally extended to either side of this plane, it is possible to maintain the surrounding unrelated structure at a more or less uniform separation from the switch. While the backing plate is entirely flat on the broad surface **30***a* facing away from the stationary subassembly **2**, i.e. facing away from the "hot" side of the switch, the opposite broad surface **30***b*, with the corona shield **33** mounted thereat is decidedly rounded on all sides. This construction is specifically implemented to eliminate sharp or pointed edges which, as demonstrated hereinbefore, cause potentially critical ϵ field concentrations at such edges which lead to dielectric (air) breakdown or rupture. This same principal is manifested in every component of this switch assembly which is related to high voltages. This rounded-edges configuration is to be particularly noted on both the corona shields **33, 43,** of the respective switch subassemblies **2** and **3**. As particularly shown in FIG. **5**, this configuration is religously followed not only for just the outer edges of the shields, but also for all edges, including those surrounding the various switch contacts.

Backing plate **30** possesses a number of apertures which effect a fixed communication of the plate **30** with the other elements associated therewith. For example, the large rectangular aperture **30***c* enables the various wires **23** to run to the rear portions of the contacts comprising the contact block **31**, the latter in turn being protectively recessed in the corona shield **33**. Apertures at **30***d* and **30***e* enable the contact block **31** to be fixedly mounted to plate **30** for example by the nut and bolt arrangement shown. The various apertures in backing plate **30** are positioned with the intent to preserve the above-mentioned symmetry. This is particularly evident in the three apertures **30***f*, **30***g*, and **30***h* (the latter not shown in FIG. **5**), arranged in a triangle of substantially equilateral configuration and about the vertical plane of symmetry, which apertures are provided to house means ror attaching the corona shield **33** to the plate **31**. The large circular aperture **30***a* houses a connector backing assembly indicated generally by **32***a* which secures a coaxial cable **24** running to coaxial end connector **32** recessed in corona shield **33**, and positioned on the vertical plane of symmetry. As shown, the backing assembly is, by way of a wing-shaped element, symmetrically secured to the plate **31**. The smaller circular aperture **30***j* is intended to be a "guide hole" for member **6** coupled between the switch subassemblies **2** and **3**; member **6** will be discussed in detail hereinafter.

In viewing the corona shield **33** (FIG. **1**), it is to be noted that in addition to the protective rounded edges throughout, shiled **33** is substantially triangular in shape and, symmetrically disclosed about the vertical plane of symmetry. The triangular shape is employed principally to accommodate the symmetrical arrangement of the contacts **31, 32** while stategically limiting within high voltage safety standards the area of coverage by the broad front surface of the corona shield **33**.

It is to be particularly noted that the contact block **31** is surrounded by an additional metallic piece **31***a* which also employs the rounded edges configuration for combating possible corona discharge. This piece **31***a* acts as a guide and a protector of the contact block **31** when movable subassembly **3** comes into engagement with stationary subassembly **2**. As to the contacts themselves, they are arranged parallel to one another to effect as much as possible the advantages of parallel plate consideration mentioned hereinbefore. In the embodiment illustrated (see particularly FIGS. **1** and **5**), the contact block **31** is conventional and constitutes the "female" side, and which is constructed of a highly insulative base material having copper or other suitably metallic parallel contacts in a manner well known to the art.

Referring now to the stationary subassembly **2**, the elements **40–43** thereof are essentially of the same configuration as their respective counterparts **30–33** of the movable subassembly **3**, except insofar as described below. The backing plate **40** is rounded on all edges with respect to both the broad front (**40***a*) and back (**40***b*) sides or surfaces. This advantageous shaping, therefore, provides additional protection against corona discharge to the plate **40** from structure beyond the switch itself by eliminating all sharp edges. Opposite the aperture **30***j* in plate **30**, a cylindrical end piece **6***c* of intercoupling member **6** is fixedly attached to the plate **40**. The position of this attachment of course is symmetrically made with reference to the vertical plane of symmetry, thus assuring that the plate **40**, having substantially the same arrowhead shape as plate **30**, is directly aligned with the latter plate along the principal axis of the switch. Similarly, the corona shield **43** is mounted to plate **40** directly opposite shield **33**, so as to be in direct alignment with the latter. However, while the mountings for the corona shield **43** to the plate **40** are positioned as described with reference to shield **33** and plate **30**, these mountings do not rigidly hold corona shield **43** in the position shown in FIGS. **1–3** and **5**. Rather, they comprise a spring mount assembly (**40***f*, **40***g*, **40***h*) designed to impart a fully balanced and distributed bias opposing backward movement of the corona shield **43** toward plate **40**, such that a forced displacement backwards of the corona shield **43**, caused by contact with the corona shield **33**, will enable the front surface **43***a* of the former to remain parallel to the front surface **33***a* of the latter throughout engagement and disengagement in view of an absence of mechanical distortion presented by the spring mounting assembly. The corona shield or pressure corona pad **43** is constructed so as to a have a flat, broad rear surface **43***b* which, similarly to the front surface **43***a*, is continuous except for the apertures therein. There is, moreover, an aperture **40***i* in this rear surface for the coaxial connector mount **42***a* leading to the coaxial connector **42** which is positioned in the pressure corona pad **43** directly opposite its mating counterpart **32** of the fixed corona shield **33**. The parallel contact assembly **41** is additionally mounted in the pressure corona pad **43** so as to lie horizontally and in direct alignment with the mating parallel contact assembly **32**, and symmetrically disposed about the vertical line of symmetry. Contact assembly **41** while being fixedly attached to plate **40** by mountings of spaced relationship similar to that existing for contact assembly **32**, carries extensions at **40***d* and **40***e* which have the dual functions of mounting the

parallel contact assembly **41** out from the backing plate **40** by a predetermined separation which coincides with the amount of backward movement of the pressure corona pad **43** contemplated in attainment of full engagement of the switch subassembly, and also acting as guides for the pressure pad **43** when being displaced backward by the fixed corona shield **33**; the coaxial connector mount **42***a* may also be considered as serving this dual function.

Therefore, it may be appreciated that upon initial contact between the corona shields **33** and **43,** ther is not contact yet made as between the mating connectors respectively housed therein. However, as further forward movement of fixed corona shield **33** causes pressure corona pad **43** to displace backwards, this movement has the effect of corona pad **43** "exposing" the coaxial connector and parallel contact assembly for mating with the respective connectors of the fixed corona shield **33.** Thus, mating of the connectors is initiated shortlyafter contact is made between the corona shields, with full mating occurring when movable subassembly **3** has reached itsforwardmost position and correspondingly pressure corona pad **43** has displaced backward to about the front face **40***a* of backing plate **40.** This is of course in predetermined coordination with the operation of the drive assembly as described hereinbefore. It is to be noted that inner shield **31***a* surrounding contact assembly **31** in corona shield **33** by its smooth and rounded edges comfortably and easily is guided into a similar and cooperating shield **41***a* about the contact assembly **41** in pressure corona pad **43.** However, shiled **41***a* has an outward curving mouth designed for the dual function of accepting easily the shield **31***a* and contact assembly **31** as a guide and also additionally for protection against corona discharge.

It is to be noted further that the spring arrangement coupling the pressure corona pad **43** to the backing plate **40** additionally provides fast damping or braking as the switch approaches full engagement, this of course gives rise to an energy storage in the spring arrangement for assisting in the separation of the subassemblies and reducing the starting torque requirements of the motor.

Mounted to the rear surface **40***b* of backing plate **40** is a smooth cornered and edged triangular-shaped metallic cover **9** which serves to protectively cover the connector wires **48** running from the rear **43***b* of the pressure corona pad **43,** and specifically from the connectors **41** and **42,** into the metallic tubular conduit **7** which continues on to the various equipments associated to the conductors. It is to be noted that all mounting means associated with cover **9** are protectively recessed in well-beveled recesses **9***a*, **9***b*, again to eliminate sharp edges which give rise to concentrate ϵ fields and which therefore encourage destructive discharges.

Mentioned briefly hereinbefore was the lone member **6** coupling the two switch subassemblies together. The prior art, it was stated hereinbefore, requires also a second similar member running along the bottom of the subassemblies. The present invention has not only obviated the second across-the-gap member, and thereby removed altogether a very crucial unintended path for possible current flow, but has completely restructured member **6** even as to the composition of its various component parts. The principal part of this intercoupling or across-the-gap structural member **6** is the solid cylindrical horizontal rod or bar **6***a*. Its counterpart in the prior art is for instance composed of epoxy-bonded fiberglass which is a much lossier material than the silicone-bonded fiberglass composition as used in the instant case. This characteristic of the prior art epoxy-bonded fiberglass is derived from its greater dielectric constant, which provides for a greater storage of energy in an r.f. field, and therefore greater heat generated therein. It has been demonstrated that in the r.f. high voltage environment contemplated in this disclosure, heat generation is sufficient to cause a chemical breakdown of the prior art arrangements in view of the use of such materials as epoxy-bonded fiberglass. As silicon-bonded fiberglass has an appreciably lower dielectric constant, while having all of the favorable properties of the epoxy-bonded fiberglass, energy storage and heat generation, particularly in the high voltage r.f. environment, no longer presented a serious problem leading to the destruction of the switch.

To further combat breakdown along the across-the-gap member **6,** the silicone-bonded fiberglass piece **6a** is given a teflon outer shield, teflon of course being a very high arc-resistant and a non-tracking material. Moreover, to further discourage creepage and breakdown, the two end pieces **6***b* and **6***c* thereto are designed as metallic corona shields, having the characteristic rounded and smooth edges and surfaces, and actually providing a "well" in which there is inserted the ends of the main piece **6***a*, so as to enable the greatest possible distribution of ϵ field at the interface of the end pieces **6***b* and **6***c* with the silicone bonded fiberglass piece **6***a*. The end piece **6***c* is firmly mounted to three-sided housing **5** at point **60,** with the other end piece **6***b* being mounted as hereinbefore described to the backing plate **40** immediately above corona shield **43** and on the vertical plane of symmetry.

Principally this across-the-gap member **6** provides a main structural piece running along parallel to the principal axis of the switch assembly, rigidly maintaining the two switch subassemblies relative to each other. It is to be noted that the aperture in backing plate **30** through which member **6** passes in its guiding function, is also well beveled to provide the most favorable ϵ field distribution between piece **6***a* and plate **30.**

One further main aspect of this switch assembly remains to be discussed. That aspect is the relationship between the switch and the base **1** on which the switch is situated and which separates the switch from unrelated equipments arranged therebelow giving rise to high potential differences between the switch and these equipments. The base **1** is of long, substantially flat rectangular arrangement running under the full length of the switch assembly and parallel to the principal switch axis. Its composition is also silicone-bonded fiberglass and for largely the same reasons as given above with reference to coupling member **6.** Base **1** has an appreciable cross-section but yet by its composition is still relatively lightweight.

Placed in a cross-sectional recess **1***b* in the top surface of base **1** is another piece **1a** of silicone-bonded fiberglass, having rounded and continuous top and side surfaces. Substantially in its center runs a smooth sided elongated groove **1***a'* running substantially perpendicular to the principal switch axis, in which the round-edged bottom portion of backing plate **40** sets. Similar indentations on either side of this groove **1***a'* are provided for the backing cover **9** and pressure corona pad

43. The relationship of these last two mentioned elements and also the backing plate **40** to the silicone-bonded fiberglass piece **1***a* is, by the rounded and smooth edged construction of all of these elements, such that field concentration is maintained in its most favorable distribution between these elements, thus minimizing the possibility of unwanted current flow by way of corona discharge and breakdown from the switch through the base to the equipments therebelow.

In the above, there has been described a novel switch assembly particularly for high voltage r.f. applications in a space-restricted encironment closely separated from other equipments which are capable of giving rise to secondary high-voltage gradient considerations. Analysis of the prior art relative to such an environment revealed the need for the compound protection of the instant arrangement, particularly because of steep gradient potential lying in at least two directions, one across the switch gap and the other through the base relating to the equipments below. This compound protection is provided according to the invention, as:

a. the exposed profile of connectors and ground fingers in the switch gap, characteristic of the prior art, have been shielded by parallel-plate construction in the form of corona shields to greatly reduce the possibility of corona discharge and dielectric breakdown of air in the concentrated field;

b. only a single across-the-gap or intercoupling structural member is provided between switch assemblies according to the invention, compared to at least two such members as characteristic in the prior art, with the construction of this single member minimizing: energy adsorption and heating problems due to the base material composition of silicone-bonded fiberglass, surface creepage due to a special non-tracking teflon skin, and corona discharge by having as end pieces corona caps designed to distribute the electric field and relieve electrical stress;

c. the contour and shaping of the various elements of the stationary subassembly have been improved over the prior art to minimize concentrated fields in general which cause corona discharge or creepage breakdown particularly with respect to the unrelated structure nearby;

d. the "base" section is designed and constructed to not only support the "hot" side of the switch, i.e. the stationary subassembly, but also to stategically distribute the electrical stress between the switch assembly and the base. Being composed of low-loss silicone-bonded fiberglass, dissipated power is reduced, thus improving the efficiency for example of the r.f. antennas associated with the switch assembly in the example environment hereinbefore defined; and

e. the "hot" side corona shield is mounted as a pressure corona pad via a spring arrangement which enables a spring loading engagement of the parallel-plate front surfaces of the corona shields prior to contact being effected between the mating contacts, and minimizing thereby the possibilities of discharge and breakdown. This type of arrangement provides the unusual advantage that the stored energy of the compressed springs from the switch engagement provides desirable "braking" of electrically de-energized rotating parts and assists the drive motor to overcome its greatest load, that of starting under the static friction of mated connectors.

While the principles of this invention has been described above in connection with specific apparatus, it is to be understood that this description is made only by way of example and not as a limitation on the scope of the invention as set forth in the objects and features thereof and in the accompanying claims.

What is claimed is:

1. A high voltage switch assembly having a pair of subassemblies arranged for relative movement to effect engagement and disengagement thereof, wherein the subassemblies have respective engageable surfaces maintained in parallel plate configuration, each said front surface defining at least one aperture by way of which there is accessible a plurality of matable contacts;

said subassemblies comprise a stationary contact-bearing subassembly and a movable contact-bearing subassembly, the respective engageable surfaces of which are front surfaces and the respective pluralities of contacts are symmetrically arranged, in at least one contact block of cooperating shape with said aJ least one aperture, about a vertical plane of symmetry passing through the principal (longitudinal) axis of the switch assembly;

each said subassembly further comprises a corona shield for housing said plurality of contacts and which includes said respective front surface, each said conrona shield being shaped to provide rounded edges throughout for maintaining a distributed electrical stress and arranged symmetrically about said vertical plane of symmetry; and

said subassemblies each further comprise a backing plate having a front surface to which is mounted the respective corona shield by way of the latter's rear surface, each said backing plate being shaped to be symmetrically disposed about said vertical plane of symmetry and to have rounded edges at least on those surfaces associative to a steep voltage gradient, so as to effectively distribute electrical stress.

2. The arrangement according to claim **1** wherein alignment between said subassemblies and structural stability of the switch assembly is maintained by a single member coupled between said switch subassemblies apart from said front surfaces, said member being arranged parallel to said principal switch axis and in said vertical plane of symmetry, and wherein said single member is fixedly coupled at one end to the front surface of the stationary subassembly backing plate above the associated corona shield and is arranged to be slidably coupled to the movable subassembly by way of an oppositely disposed aperture in the movable subassembly backing plate above the associated corona shield.

3. The arrangement according to claim **2** wherein said aperture in said movable subassembly backing plate through which passes said single member is heavily beveled to distribute electrical stress.

4. The arrangement according to claim **2** wherein said movable subassembly is coupled by way of the backing plate thereof to motive means for imparting rectilinear motion to said movable subassembly along the principal switch axis, said motive means providing maximum mechanical advantage for said movement in approaching full engagement of said subassemblies and upon initial movement in the disengagement thereof.

5. The arrangement according to claim 1 wherein each said corona shield defines a hollow chamber bounded in part by a rear surface which in turn defines at least one aperture corresponding to said plurality of contacts arranged in at least one contact block, and each said subassembly backing plate having an aperture corresponding in shape and position to said at least one aperture associated with said plurality of contacts in the rear surface of the respective corona shield.

6. The arrangement according to claim 1 wherein the corona shield of said movable subassembly is fixedly mounted to the associated backing plate, and the corona shield of said stationary subassembly is mounted to its associated backing plate by way of a spring-mounting arrangement enabling a balanced backward displacement of predetermined dimension upon engagement of said subassembly front surfaces.

7. The arrangement according to claim 6 wherein said spring mounting arrangement provides for the relative arrangement between the associated corona shield and the plurality of contacts it houses to be such that when engagement is effected between said subassembly front surfaces, the backward displacement of the spring-mounted corona shield causes to be bared the stationary subassembly contacts for engagement with the matable contacts of said movable subassembly.

8. The arrangement according to claim 7 wherein said spring mount arrangement is in the form of an inverted triangular mounting symmetrically disposed about said vertical plane of symmetry.

9. The arrangement according to claim 8 wherein said plurality of contacts of said stationary subassembly in at least one contact block are fixedly mounted to the associated stationary subassembly backing plate by way of stationary mountings, said stationary mountings being in the form of rigid extensions running between said contact block and said backing plate for maintaining said contacts in a position to be bared upon a backward displacement of the associated spring-mounted corona shield, and for effecting contributory guidance of the spring-mounted corona shield in the displacement thereof upon engagement and disengagement of the switch assembly, and thereby helping to maintain said parallel plate condition between said subassembly front surfaces.

10. The arrangement according to claim 1 further comprising a back cover mounted on the rear surface of the backing plate of said stationary subassembly for completing a protective chamber about the plurality of contacts associated with said stationary subassembly in the individual coupling thereof to respective conductors extending from the switch assembly by way of an aperture in said back cover, said back cover having a shape providing only rounded edges so as to prevent concentrations of electrical stress.

11. The arrangement according to claim 7 wherein said stationary subassembly spring-mounted corona shield is in the form of a pressure corona pad arranged such that the front surface thereof makes contact with the front surface of the corona shield of the movable subassembly in the engaging mode prior to the baring of the stationary subassembly contacts for engagement with the corresponding contacts of the movable subassembly, and further arranged such that in a disengaging mode contact is maintained between said corona shield front surfaces until a complete separation of the respective subassembly contacts is effected.

12. The arrangement according to claim 8 wherein said spring-mounting arrangement includes means for storing energy upon engagement of the switch subassemblies which automatically release said energy when disengagement of the subassemblies is effected so as to aide the motive means effecting the disengagement to overcome the maximum static frictional load of the fully engaged subassemblies.

13. The arrangement according to claim 12 wherein said means for storing energy is arranged to provide a rapid damping (braking) of the movement of the corona shields in contact as the switch assembly approaches a fully engaged condition.

14. The arrangement according to claim 2 further comprising a base composed of low-loss dielectric material having a low dielectric constant, for supporting the switch assembly and for physically separating and electrically isolating the switch assembly from unrelated equipments closeby carrying potentials which could give rise to secondary steep voltage gradients relative to the switch assembly.

15. The arrangement according to claim 14 wherein said base is composed of silicone-bonded fiberglass providing low energy adsorption and preventing an adverse heating condition in an r.f. environment, said base having a substantially flat upper surface on which the switch assembly is supported.

16. The arrangement according to claim 15 wherein said base includes a slotted block of silicone-bonded fiberglass mounted to said flat upper surface, on which is supported the ("hot-side") stationary subassembly of the switch assembly, the contour of the slotted block individually and in relation to the stationary subassembly being such as to provide rounded-edge surfaces corresponding to equivalent rounded edge surfaces of said stationary subassembly so as to effectively distribute electrical stress arising from secondary voltage gradients which may exist between the switch assembly and unrelated equipments closeby beneath said base.

17. The arrangement according to claim 16 wherein the lower rounded-edge portion of the backing plate of said stationary subassembly is situate in the rounded-edge slot of said slotted block, the slot being perpendicular to the principal switch axis.

18. In a high voltage switch assembly, having a stationary contact-baring subassembly and a movable contact-baring subassembly for engaging the former, and in which the subassemblies define a gap of predetermined parallel plate dimensions therebetween in the disengaged mode, a single "across-the-gap" structural member providing structural stability for the switch assembly and guiding alignment of the movable subassembly for effecting proper switch engagement and disengagement, said structural member being composed of a low-loss dielectric material and having at each end a corona cap designed to distribute electrical stress.

19. The arrangement according to claim 18 further including a non-tracking skin over the low-loss dielectric material for combating high voltage creepage along the across-the-gap member.

20. The arrangement according to claim 19 wherein said low-loss dielectric material is silicone-bonded fiberglass and said non-tracking skin is composed of teflon.

21. The arrangement according to claim 19 wherein said low-loss dielectric material is in the form of a solid cylinder, and the corona caps are metallic and cylindrical in shape coupled to either end of the dielectric solid cylindrical piece, with each corona cap at the one end associated with said solid cylindrical piece having a recess for housing the cylinder end, the shape of the opening of the recess of each corona cap being continuous and rounded to distribute electrical stress between the corona caps and the dielectric cylindrical piece of said across-the-gap member.

22. The arrangement according to claim 19 wherein said across-the-gap member communicates with the respective switch subassemblies other than by way of the engaging surfaces of the subassemblies.

23. The arrangement according to claim 22 wherein said across-the-gap member is mounted on the one hand to the stationary subassembly by way of the back end of one of the corona caps being coupled to a backing plate of the stationary subassembly above the surface of the latter which engages the corresponding surface of the movable subassembly, and on the other hand communicates with the movable subassembly by way of passing through an aperture in a backing plate of the movable subassembly located above the surface of the latter which engages the stationary subassembly, the aperture in the backing plate of the movable subassembly providing a circular guide hole for the movable subassembly in moving rectilinearly along the across-the-gap member.

24. The arrangement according to claim 23 wherein the back end of the other corona cap is mounted to a housing in which the movable subassembly is also coupled by way of a bearing arrangement.

* * * * *