Sept. 2, 1930. C. W. HARTMANN 1,775,027

CARTON

Filed Dec. 20, 1927 2 Sheets-Sheet 1

Fig. 2.

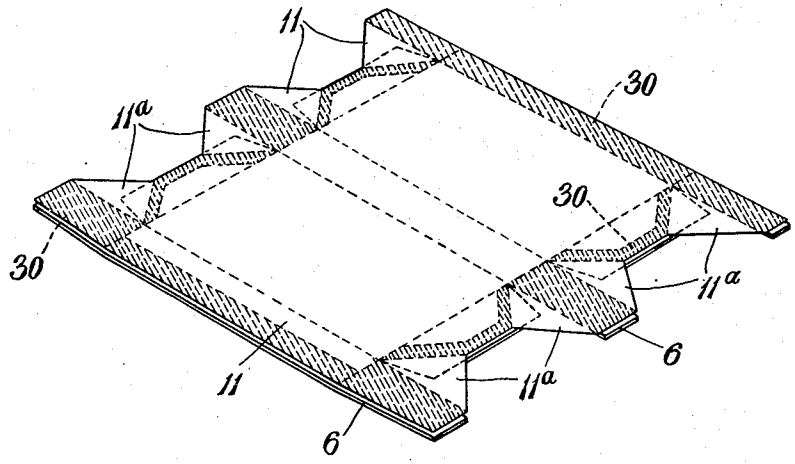

Fig. 1.

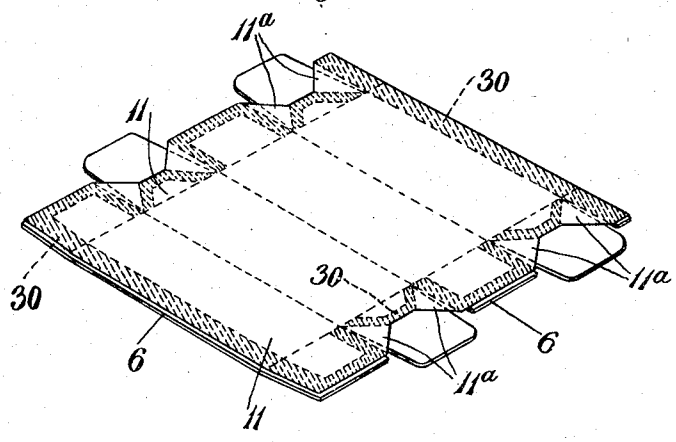

INVENTOR.
CARL W. HARTMANN.
Per.
Rayner & Co
ATTORNEYS.

Sept. 2, 1930. C. W. HARTMANN 1,775,027

CARTON

Filed Dec. 20, 1927 2 Sheets-Sheet 2

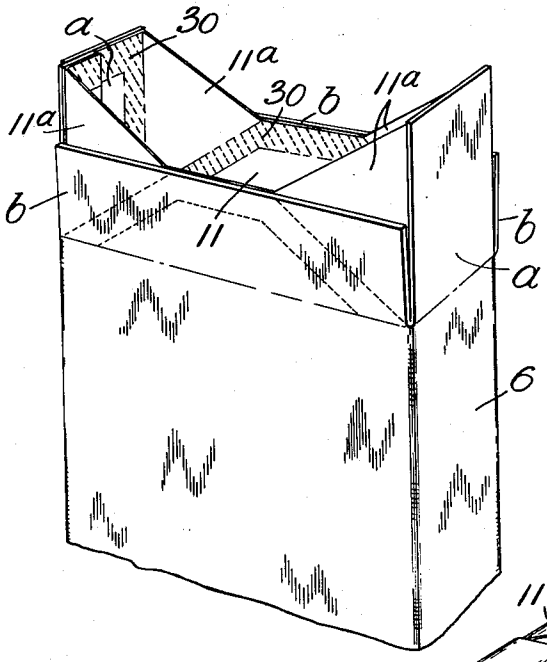

Fig. 3.

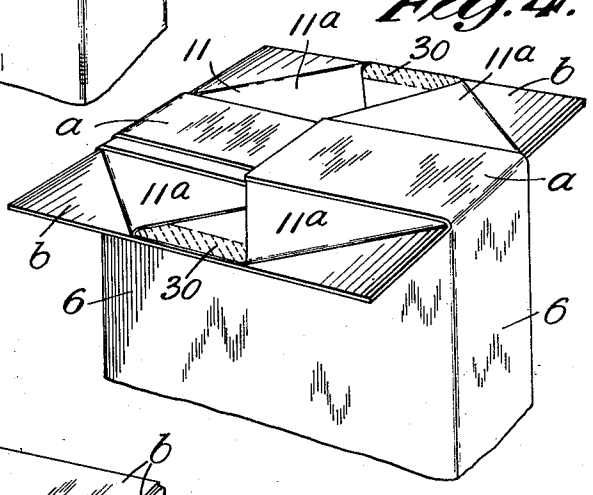

Fig. 4.

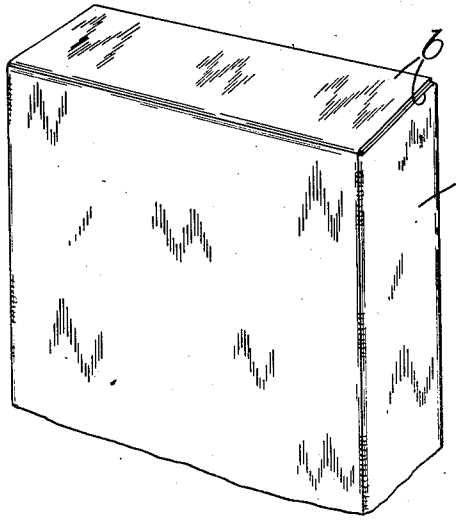

Fig. 5.

INVENTOR
CARL W HARTMANN
PER Rayner & Co
ATTORNEYS

Patented Sept. 2, 1930 1,775,027

UNITED STATES PATENT OFFICE

CARL WILHELM HARTMANN, OF COPENHAGEN, DENMARK

CARTON

Application filed December 20, 1927, Serial No. 241,351, and in Great Britain January 17, 1927.

My invention relates to improvements in boxes or cartons and refers more particularly to improvements in existing type of box or carton usually formed of cardboard and provided with a paper or other lining secured to the material of the box or carton at certain places and free at others so that when the ends or flaps of the box or carton are folded over to effect a closure, the paper lining will also be automatically folded so as to effectively seal the contents of the box.

Hitherto it has not been found practical to successfully manufacture cartons of this type unless the shape of the cartons be restricted so that its cross section is a rectangle, the dimension of whose sides are in the approximate proportion of two to one.

Now it is highly desirable that boxes of this type should be of a square or substantially square section since they are largely used for packing goods filled into the box by automatic machines and the majority of such machines are arranged for use with packages of a square section.

On the other hand in some cases flat boxes are preferred, i. e. rectangular boxes, whose dimensions in one direction are small compared to the dimensions in the other direction and which need not necessarily be of any definite proportion to one another.

The object of this invention is to enable rectangular boxes of this type to be made of square or substantially square section and also of a shape having sides of any other convenient dimensions or proportions, or rectangular boxes of any desired flatness.

According to my invention the lining is shaped at its ends in such manner that when it is applied by a suitable adhesive to the blank comprising the carton the parts of the lining applied to two of the sides of the carton which will oppose or will be parallel to each other when the carton is folded have their end edges extending beyond the end edges of the parts of the lining applied to the other two sides of the carton. This can be effected by not as heretofore has been the practice simply forming each end of the lining with a straight edge but by forming each end of the lining with an edge containing two substantially trapezoidal cut-away or bay portions interrupting the straight continuity of the end edge of the lining.

The lining is attached to the inner flaps all round the edges while its attachment to the outer flaps is along a substantially trapezoidal-shaped outline symmetrical to that of the cut.

In blanks for producing square-shaped boxes the said substantially rectangular cuts serve to reduce the heights of the inner flaps, so that these flaps and the parts of the lining completely coating them only overlap each other to a suitable extent but do not cover each other entirely. The outer flaps, being higher than the inner one, substantially cover each other when closed. The parts of the lining attached to the outer flaps will, owing to the said trapezoidal-shaped cuts, only cover a small part of the flaps, which part after closing of the inner flaps assumes a trapezoidal-shape and which comparatively low and folded trapezoid is bent upon the closed inner flaps when closing the outer ones.

In blanks for producing flat boxes the substantially rectangular cuts serve to reduce the heights of the outer flaps so as to correspond to the breadth of the small sides of the boxes, in order to enable them to cover each other when closed. The inner flaps are comparatively higher, or so high as to suitably overlap each other when closed. In this case the shorter parallel lines of the trapezoid may coincide with the upper edges of the reduced flaps.

The edges of the lining and those of the carton do not coincide throughout but only at periodically repeated points between which points the lining is either shorter or broader than the carton according to the circumstances.

In order that my invention may be clearly understood and readily carried into effect, I have illustrated in the accompanying drawings an embodiment of the invention, and wherein:—

Figs. 1 and 2 show perspective views of a complete blank for a carton of square sec-

tion and of flat rectangular section respectively.

Figs. 3, 4 and 5 are part perspective views of a carton showing how the closure is effected.

In Fig. 1 is shown a complete blank in perspective having lining 11 uppermost. The lining 11 is attached to the carton blank 6 by means of adhesive along the shaded portions 30.

Fig. 2 is a similar view to Fig. 6 but illustrating a carton of flat or shallow rectangular section.

In Figs. 1 and 2 it will be seen that the trapezoidal cut-away portions of the lining are substantially symmetrical with the parts where they are adhered to the carton, thus providing non-adhesive triangular portions 11^a which are yieldable to enable the flaps to be folded over each other.

Fig. 3 shows a carton with its upper end open for filling. In Fig. 4 the carton is shown with flaps *b* folded outwardly and flaps *a* turned down to cover the contents. The exposed upper surface is then pasted and the flaps *b* folded over to complete the closure as shown in Fig. 5.

Cartons of this type are used almost exclusively in automatic packing machines in which the flaps are folded and pasted automatically by the machine. In such machines two of the flaps (*a*) are folded over the contents first and the other two flaps (*b*) are turned outward as shown. The act of folding the flaps (*b*) outwardly will draw the flaps (*a*) down over the contents as shown in Fig. 4. The whole of the flat upper surface thus exposed is mechanically pasted by passing beneath a roller to which an adhesive is supplied. The flaps (*b*) are mechanically folded one after the other and are held in place until they adhere by passing beneath a pressure plate which may be heated to assist drying of the adhesive. It will be obvious that the lining must fold neatly and accurately for any excess would cause crumpling and insufficiency would cause tearing of the lining both of which would prevent an airtight and powder tight seal being obtained. It is also desirable that the flaps (*a*) should meet and overlap slightly to prevent paste coming into contact with the contents and to prevent the contents from adhering to the pasting roller.

It will be understood from the aforesaid that in the present invention some material is always removed owing to the reduction of the height of the flaps, and this enables square-shaped boxes and flat boxes to be produced in a practical and satisfactory manner.

Boxes or cartons according to this invention may be constructed of any suitable material such as cardboard, paper, fibre or the like and may be arranged to be readily collapsible. The lining material may be of paper of the greaseproof or any other suitable variety, or of tin-foil, or metal, coated paper or fabric. The boxes or cartons may be provided with covering flaps adapted to fold over one or both ends of the box. The lining material preferably extends all over the interior of the box and serves to keep the contents from contact with the material of the box, whilst the ends are arranged to fold in such a manner as to afford an effective seal preventing any loss of packed dust or powder material and further protecting the contents against the ingress of air and serving to protect them against deterioration.

I claim:—

In a carton having an interior lining secured to the outer case and adapted to fold automatically with the folding of the end flaps of the carton case, two pairs of flaps at each end of the carton, one pair longer than the other pair, extensions of the lining completely covering one pair of flaps and caused to adhere all round the edges thereof, trapezoidal extensions of the lining caused to adhere to the other flaps and free triangular pieces of lining connecting the trapezoidal lining on the latter flaps to the lining on the former flaps.

CARL WILHELM HARTMANN.