June 29, 1937. W. H. KITTO 2,085,701

SUCTION CLEANER

Filed May 31, 1934

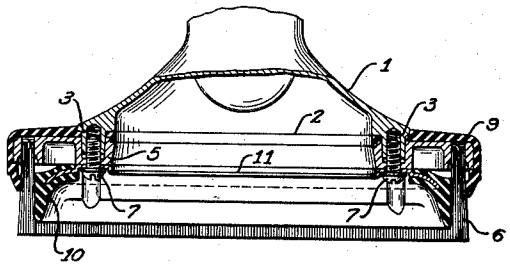

Fig. 2

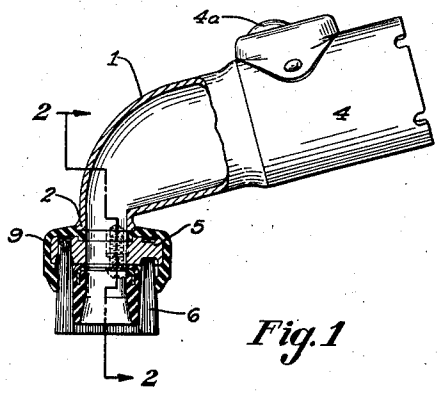

Fig. 1

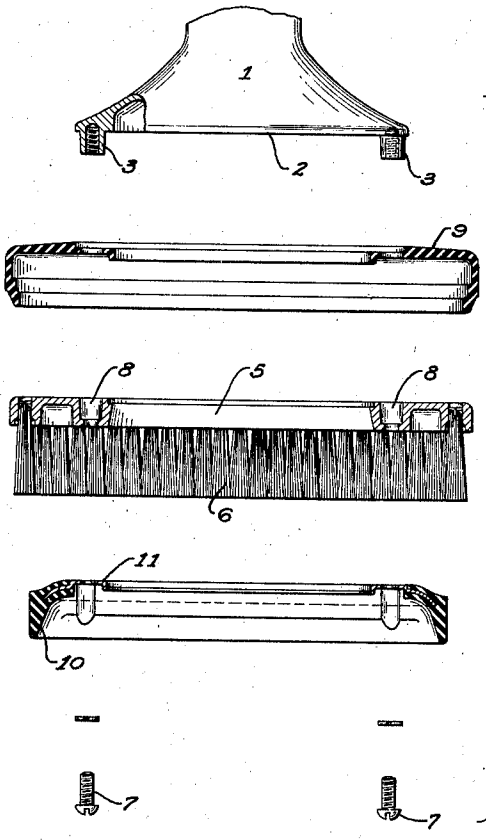

Fig. 4

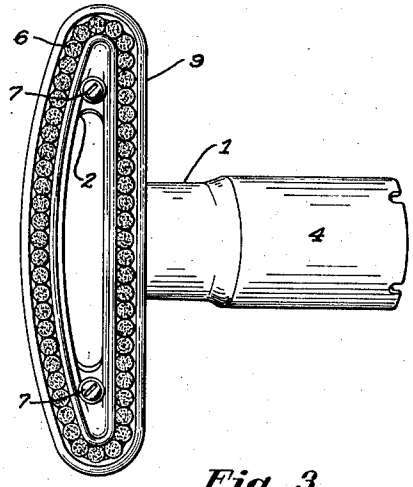

Fig. 3

INVENTOR

William H. Kitto

BY

Harry E. Dunaree

ATTORNEY

Patented June 29, 1937 2,085,701

UNITED STATES PATENT OFFICE

2,085,701

SUCTION CLEANER

William H. Kitto, Canton, Ohio, assignor to The Hoover Company, North Canton, Ohio, a corporation of Ohio

Application May 31, 1934, Serial No. 728,230

4 Claims. (Cl. 15—158)

The present invention relates to suction cleaners in general and particularly to new and novel improvements in dusting tool nozzles. More specifically the invention comprises an improved dusting tool nozzle having an improved arrangement of parts.

It is an object of the invention to provide a new and improved dusting tool nozzle. It is another object of the invention to provide a new and improved dusting tool nozzle having a surface-contacting brush. Still another object is the provision of a new and novel dusting tool nozzle assembly which includes a surface-contacting brush, a brush support which reinforces the brush bristles and which restricts the air entering the nozzle to the surface-contacting portion of the brush, and a guard member which protects articles from contact by the metallic portions of the nozzle. These and other more specific objects will appear upon reading the following specifications and claims and upon considering in connection therewith the attached drawing to which they relate.

In the drawing in which a preferred embodiment of the invention is disclosed:

Figure 1 is a section thru the dusting tool nozzle assembly;

Figure 2 is a section upon the line 2—2 of Fig. 1;

Figure 3 is a bottom view of the nozzle;

Figure 4 is an exploded view of the parts of the nozzle.

The nozzle comprising the present invention is of the type which is adapted to be secured at the end of the dusting tool hose which is itself secured to a suction cleaner. The nozzle comprises a nozzle proper 1 having an elongated mouth portion 2 with downwardly projected internally threaded lugs 3, 3 at its ends, and a cylindrical rearwardly and upwardly inclined tubular portion 4. Tubular portion 4 is adapted to seat directly on the end of the dusting tool hose and be removably secured thereon by the spring-pressed detent 4*a*.

A brush assembly, including a metallic frame 5 having a central opening shaped in conformance with the elongated mouth portion 2 of the nozzle 1 and in which tufts of bristles 6 are secured, is removably secured to the nozzle 1 by means of screws 7, 7 which extend into the internally threaded lugs 3, 3 on the nozzle, the lugs seating within seats 8, 8 in the frame. The configuration of the brush bristles is shown in Figure 3 and is such that the bristles are positioned adjacent to the nozzle mouth portion 2 along its sides, but are spaced therefrom at the ends.

A resilient guard 9 overlies the metallic frame 5 and extends downwardly into contact with the bristles 6, immediately below the frame, as illustrated in Figures 1 and 2. Guard 9 also extends between the frame 5 and the nozzle mouth 2 and is clamped therebetween by the screws 7, 7.

Inside the ring of bristles 6 is positioned the brush bristle support comprising a resilient body or wall 10, which extends into contact with the bristles, and a support plate comprising a sheet metal insert 11 which is preferably molded into body 10. The support 11 lies against the frame 5 and is also retained in place by the screws 7, 7 which extend therethrough as shown in Figure 2. The outer side of body 10 is substantially flat and, in addition to supporting the bristles 6, restricts the inflow of air to the surface-contacting portions of the bristles. As is clearly illustrated in Fig. 2, the brush guard 9, which extends along the outside of the bristles, cooperates with the guard 10 in reinforcing the bristles.

In the use of a dusting tool nozzle constructed in accordance with the present invention cleaning air is drawn by suitable suction-creating means, made effective through an unshown elongated flexible dusting tool hose, into the nozzle. The user normally moves the dusting tool nozzle over a covering undergoing cleaning, the bristles 6 being in contact with the covering and functioning to disturb the foreign matter positioned therein. The resilient bristle support 10 functions to prevent undue bending of the bristles, and at the same time causes the cleaning air to pass the point of surface agitation. The guard 9 surrounding the nozzle prevents injury to articles of furniture etc.

I claim:

1. In a dusting tool nozzle, a nozzle proper adapted to be connected to a source of suction, a bristle assembly including a back and downwardly extending bristles, a resilient guard overlying said back and extending between said back and said nozzle, said guard extending downwardly along said bristles into reinforcing contact therewith, and a bristle support including a resilient body extending along said bristles upon the opposite side from said guard and extending into contact with the underside of said back, and securing means extended through said support, said back, and said guard into said nozzle to secure said parts fixedly together.

2. In a dusting tool nozzle, a nozzle proper adapted to be connected to a source of suction, a bristle assembly including a back and down-

wardly extending bristles, a resilient guard overlying said back and extending between said back and said nozzle, said guard extending downwardly along said bristles into reinforcing contact therewith, and a bristle support including a resilient body and a rigid insert, said insert extending adjacent the underside of said back and said body extending along said bristles upon the opposite side from said guard, and securing means extended through said rigid insert, said back and said guard into said nozzle to secure said parts fixedly together.

3. In a dusting tool nozzle, a nozzle proper having an elongated mouth, a bristle-carrying back having an opening conforming to the shape of said mouth positioned adjacent thereto, brush bristles mounted in said back encircling said mouth closely at its side and extending therefrom and in spaced relation thereto at its ends, a resilient guard overlying said back extending between said back and said nozzle proper and downwardly along the outside of said bristles to perform a reinforcing function, and a bristle support of resilient material forming an extension of said mouth to a point near the lower edge of said bristles, said support including a metallic insert lying adjacent the underside of said back, and means securing said support to said back and said back to said nozzle, said guard being clamped between said back and said nozzle.

4. In a dusting tool nozzle, a nozzle proper having a mouth and a downwardly extending internally threaded lug, a bristle-carrying back having an opening conforming to the shape of said mouth and an open-bottomed seat to receive said lug, brush bristles in said back enclosing said mouth, a resilient guard overlying said back extending between said back and said nozzle proper and downwardly along the outside of said bristles, and a bristle support of resilient material contacting the innerside of said bristles and including a metallic attachment plate lying along the underside of said back, and a headed screw extending thru said attachment plate and into said threaded lug to clamp said parts together.

WILLIAM H. KITTO.