US 20040178157A1

(19) United States

(12) Patent Application Publication (10) Pub. No.: US 2004/0178157 A1

Tse (43) Pub. Date: Sep. 16, 2004

(54) **DISPLAY RACK**

(76) Inventor: **Hing Fai Gary Tse**, Hong Kong (HK)

Correspondence Address:
Mr. Eric Chan
42 Pin Oaks Drive
Phoenixville, PA 19460 (US)

(21) Appl. No.: **10/391,138**

(22) Filed: **Mar. 15, 2003**

Publication Classification

(51) **Int. Cl.**[7] **A47F 5/00**

(52) **U.S. Cl.** **211/59.3**

(57) **ABSTRACT**

The present invention relates to a display rack which can automatically replenish the products in the front of the rack. The display rack comprises: a rack, an auto-tracking system, a sliding unit and a smooth surface. One end of the auto-tracking system is connected to the front plate of the rack and the other end of which is connected to the vertical plate of the sliding unit. The sliding unit is placed inside the rack and is able to slide freely. The smooth surface is on the inner bottom surface of the rack to reduce the sliding unit's resistance while sliding.

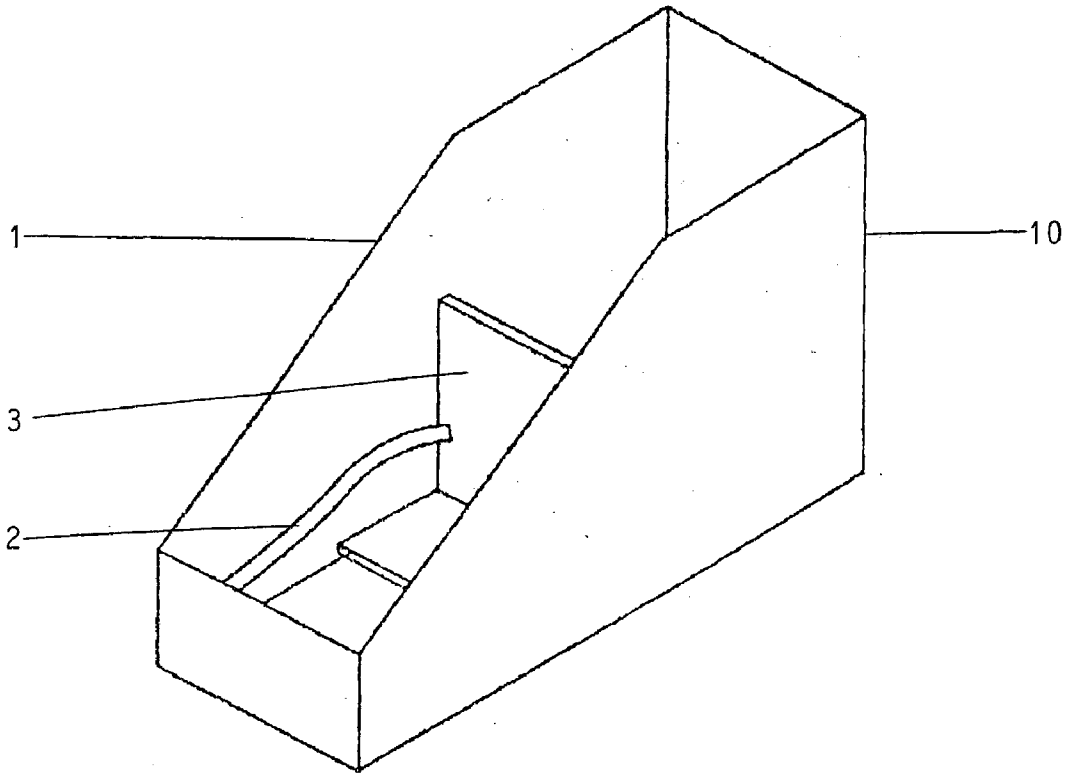

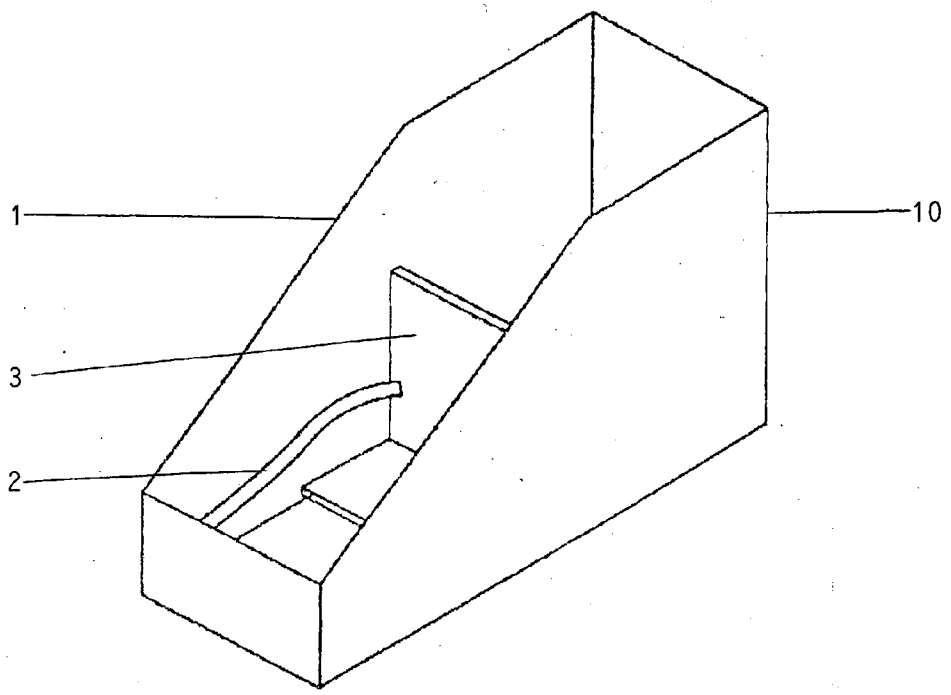

FIG.1

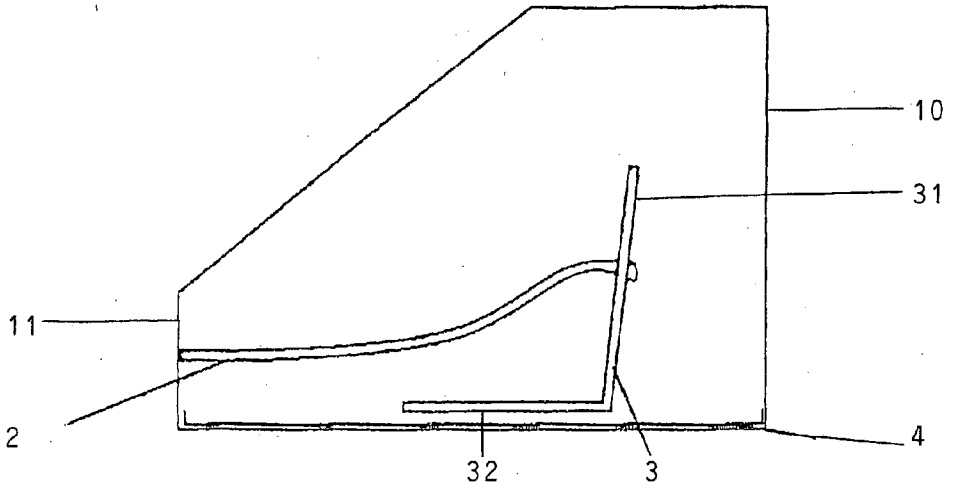

FIG.2

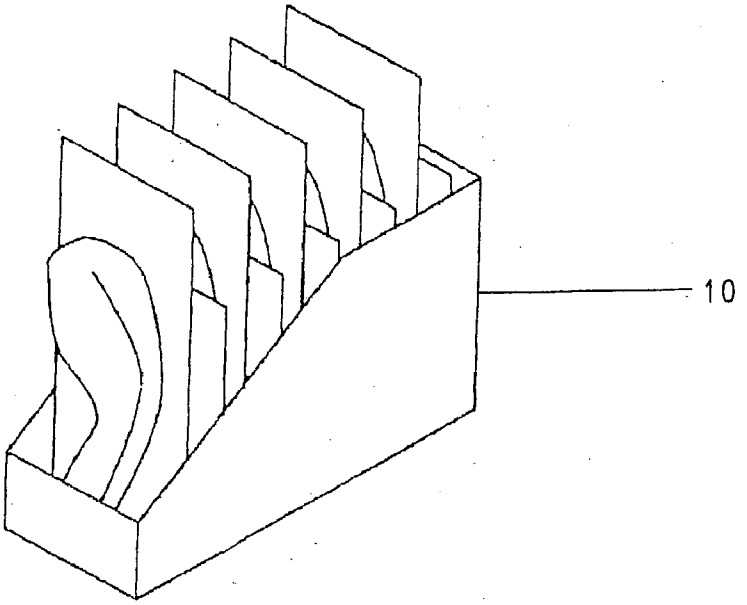

FIG.3

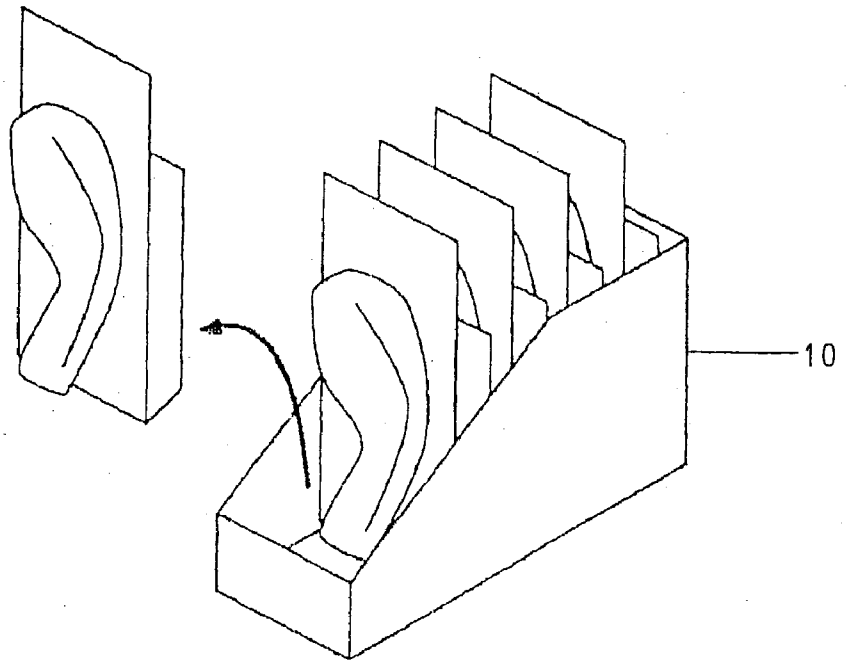

FIG.4

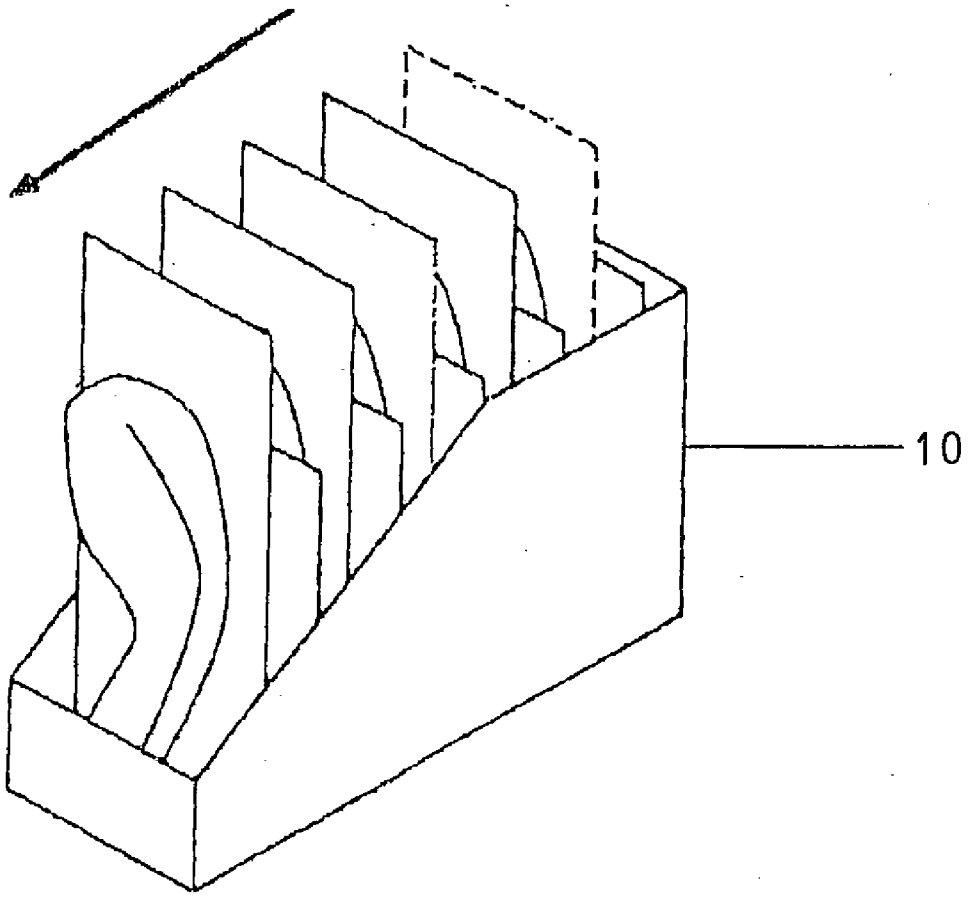

FIG.5

DISPLAY RACK

BACKGROUND OF THE INVENTION

[0001] The present invention relates to a display rack and more particularly pertains to a new display rack which can automatically replenish the products in the front of the rack.

[0002] Available display racks in the marketplace cannot automatically replenish the products in display. When a product is removed from the rack for sale, a blank space will be created and the remaining products may slide down in uncontrollable directions. The rack therefore looks messy and requires manual replenishment or rearrangement to tidy it up.

BRIEF SUMMARY OF THE INVENTION

[0003] In view of the aforesaid disadvantages now present in the prior art, the present invention provides a new display rack carton box and all kinds of package which can automatically replenish the products in the front of the rack, thus making the display rack always tidy and saving manpower for tidy it up frequently.

[0004] To attain this, the present invention generally comprises a rack, an auto-tracking system, a sliding unit and a smooth surface. One end of the auto-tracking system is connected to the rack and the other end of which is connected to the sliding unit. The sliding unit is placed inside the rack and is able to slide freely. There is a smooth surface on the inner bottom surface of the rack so as to reduce the sliding unit's resistance to the bottom surface of the rack while sliding.

[0005] The rack can be made of any material such as cardboard or pasteboard.

[0006] The auto-tracking system can be made of any elastic material such as a rubber band or a metal or other devices.

[0007] One of auto-tracking system can be connected to the rack and the sliding unit by any means such as by opening holes on the rack and the sliding unit and piercing the auto-tracking system through the holes, or by stapling the auto-tracking system to the rack and the sliding unit, or by adding fasteners to the rack and the sliding unit, or by sticking the auto-tracking system on the rack and the sliding unit.

[0008] More than one auto-tracking system can be installed.

[0009] An additional smooth surface can be added to the bottom of the sliding unit, which is above the smooth surface of the rack.

[0010] It is an object of the present invention to provide a new display rack which has a sliding unit for holding products and an auto-tracking system to pull the sliding unit forward to the front of the rack immediately after a product is removed from the rack, thus leaving no blank space in the front of the rack and making the display rack always tidy.

[0011] It is another object of the present invention to provide a new display rack which requires no manpower to tidy it up and saves manpower to replenish the products frequently.

[0012] It is a further object of the present invention to provide a new display rack which is of simple and reliable construction.

[0013] An even further object of the present invention is to provide a new display rack which can automatically replenish the products in the front of the rack and is therefore always tidy and can save manpower for tidy it up and for frequent replenishment of the products, thus overcoming the disadvantages of the prior art.

BRIEF DESCRIPTION OF THE DRAWINGS

[0014] **FIG. 1** shows the perspective view of the present invention.

[0015] **FIG. 2** shows the cross-sectional view of the present invention.

[0016] **FIG. 3** shows the perspective view of the present invention with the display products in it.

[0017] **FIG. 4** shows the perspective view of the present invention with the first product in the front is being taken out.

[0018] **FIG. 5** shows the perspective view of the present invention with the first product in the front being replenished automatically.

DETAILED DESCRIPTION OF THE INVENTION

[0019] As illustrated in **FIGS. 1 and 2**, the display rack **10** generally comprises a rack **1**, an auto-tracking system **2**, a sliding unit **3** and a smooth surface **4**.

[0020] The rack **1** can be in any shape or size which fits the products to be displayed. For example, it can be in rectangular shape and in size compatible with products of standard size such as compact discs, tissues boxes and box files. Alternatively, it can also be in a fixed shape and size for holding smaller various items in different shapes. As a further alternative, it can be tailor made to fit the shape and size of a kind of products in a designated packaging as shown in FIGS. **3** to **5**.

[0021] The rack **1** can be made of any material such as cardboard or pasteboard. To reduce the resistance of the sliding unit **3** to the bottom surface of the rack **1** while the sliding unit **3** is sliding, a smooth surface **4** is added onto the inner bottom surface of the rack **1**. The smooth surface **4** can be made of any smooth or resistance-reducible material such as waxed paper. The smooth surface **4** can be stuck on the inner bottom surface of the rack **1** by glue or any other sticking substance.

[0022] The sliding unit **3** is placed at the bottom of the rack **1**. It can be made of any material such as cardboard or pasteboard. The sliding unit **3** is in L shape comprising a vertical plate **31** and a horizontal plate **32**. Its opening is in the same direction as that of the rack **1**. The vertical plate **31** is for supporting the products to be displayed and the horizontal plate **32** is for sliding along the smooth surface **4**. There are no particular restrictions on the length or width of the vertical plate **31** and the horizontal plate **32** so long as they can be fitted into the rack **1**. The adjacent angle between the horizontal plate **32** and the vertical plate **31** can be 90° or any larger than 90°. To reduce the resistance of the sliding

unit **3** to the bottom surface of the rack **1** while sliding, it is preferable to use smooth material for making the horizontal plate **32** or, alternatively, to add a smooth surface to the bottom of the horizontal plate **32**.

[**0023**] The auto-tracking system **2** can be made of any rubber product such as a rubber band or any metal or plastic elastic product such as a spring. The required strength of the elasticity depends on the weight of the products to be displayed in the display rack **10**.

[**0024**] One end of the auto-tracking system **2** is connected to the vertical plate **31** and the other end of the auto-tracking system **2** is connected to the front plate **11** of the rack **1** by means of opening holes on the front plate **11** of the rack **1** and on the vertical plate **31** of the sliding unit **3** and piercing the auto-tracking system **2** through the holes, or by stapling the auto-tracking system **2** to the front plate **11** and the vertical plate **31**, or by adding fasteners to the front plate **11** and the vertical plate **31**, or by sticking the auto-tracking system **2** on the front plate **11** and the vertical plate **31**, or by any other method which can connect them securely.

[**0025**] More than one auto-tracking system **2** can be installed. Two auto-tracking systems **2** can be installed parallel to each other. Four auto-tracking systems **2** can be installed parallel to one another at the four corners of the vertical plate **31**. Depending on the shape and size of the display rack **10** and on the weight of the products to be displayed, two or more auto-tracking systems **2** can be installed to pull the sliding Unit **3** forward in a more powerful way.

[**0026**] As illustrated in FIGS. **3** to **5**, when the display rack **10** is filled in full with the products, the auto-tracking system **2** will be stretched to its greatest tension. The sliding unit **3** is close to the back of the rack **1**. When one of the products is taken out, the auto-tracking system **2** will shrink as the exerted tension decreases, thus pulling the sliding unit **3** to move forward along the smooth surface **4**. The products are thereby pushed forward and the space is then eliminated. As a result, without calling for manpower, the display rack **10** will always be tidy and convenient to use.

[**0027**] As to a further discussion of the manner of usage and operation of the present invention, the same should be apparent from the above description. Accordingly, no further discussion relating to the manner of usage and operation is provided.

[**0028**] With respect to the above description, it is to be realized that the optimum relationships for the parts of the invention in regard to size, shape, form, materials, function and manner of operation, assembly and use are deemed readily apparent and obvious to those skilled in the art, and all equivalent relationships to those illustrated in the drawings and described in the specification are intended to be encompassed by the present invention.

[**0029**] The present invention is capable of other embodiments and of being practiced and carried out in various ways. It is to be understood that the phraseology and terminology employed herein are for the purpose of description and should not be regarded as limiting.

[**0030**] Therefore, the foregoing is considered as illustrative only of the principles of the invention. Further, since numerous modifications and changes will readily occur to those skilled in the art, it is not desired to limit the invention to the exact construction and operation shown and described, and accordingly, all suitable modifications and equivalents may be resorted to falling within the scope of the invention.

What is claimed is:

1. A display rack comprising:

a rack;

an auto-tracking system, one end of which is connected to the front plate of the rack and the other end of which is connected to the vertical plate of the sliding unit;

a sliding unit which is placed inside the rack and is able to slide freely;

a smooth surface which is on the inner bottom surface of the rack to reduce the sliding unit's resistance while sliding.

2. A display rack as in claim 1, wherein two or more auto-tracking systems can be installed.

3. A display rack as in claim 1, wherein an additional smooth surface can be added to the bottom of the sliding unit.

* * * * *