C. G. BURK.

STOVE LID LIFTER.

APPLICATION FILED FEB. 21, 1913.

1,068,979. Patented July 29, 1913.

Fig. 1.

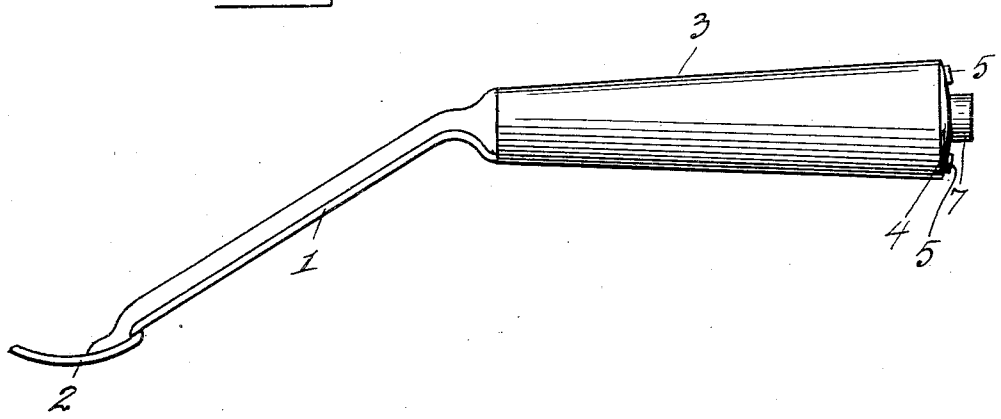

Fig. 2

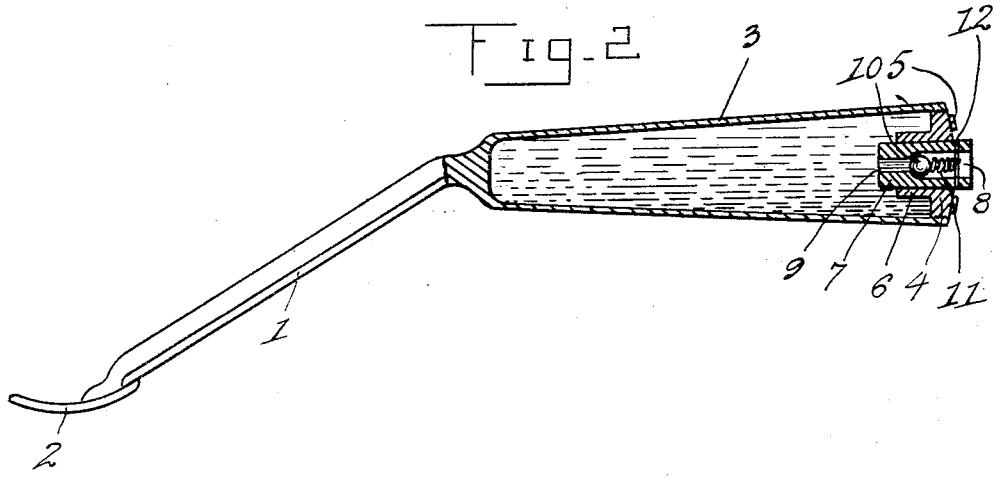

Inventor
C. G. Burk.

Witnesses
Chas. R. Bealle.
R. Smith.

By [signature] Attorney

COLUMBIA PLANOGRAPH CO., WASHINGTON, D. C.

UNITED STATES PATENT OFFICE.

CHARLEY G. BURK, OF SPENCER, SOUTH DAKOTA.

STOVE-LID LIFTER.

1,068,979. Specification of Letters Patent. Patented July 29, 1913.

Application filed February 21, 1913. Serial No. 749,940.

To all whom it may concern:

Be it known that I, CHARLEY G. BURK, a citizen of the United States, residing at Spencer, in the county of McCook and State of South Dakota, have invented certain new and useful Improvements in Stove-Lid Lifters; and I do hereby declare the following to be a full, clear, and exact description of the invention, such as will enable others skilled in the art to which it appertains to make and use the same.

This invention comprehends improvements in stove lid lifters and has for its primary object the provision of a lifter having a hollow handle to receive water, whereby the handle will not become overheated.

Another and more specific object of the invention is to provide a stove lid lifter having an integrally formed hollow handle, an apertured cap threaded into the outer end of said handle to partly close the same, and a safety plug inserted through the cap.

It is a well known fact that the ordinary stove lid lifter when left connected to the stove lid soon becomes very heated and therefore causes many burned hands. My invention aims to provide a novelly constructed lifter handle which may be kept reasonably cool so as to eliminate such accidents.

With these and other objects in view, as will become more apparent as the description proceeds, the invention consists in certain novel features of construction, combination, and arrangement of parts, as will be hereinafter described and claimed.

For a complete understanding of my invention, reference is to be had to the following description and accompanying drawings, in which,

Figure 1 is a side elevation of a stove lid lifter constructed in accordance with my invention, and, Fig. 2 is a side view partly in elevation and partly in section.

Referring in detail to the drawings by numerals, 1 designates the shank of the lifter which is enlarged at one end, as indicated at 2, for engagement with a stove lid and which has formed integrally with its other end, a hollow frusto-conical handle 3. The handle 3 is internally threaded adjacent its free end to receive an apertured cap 4, which is formed with the turning lugs or projections 5. An inwardly projecting flange 6 surrounds the opening through the cap and is engaged by a plug 7 which is adapted to be projected through said cap.

The plug 7 is formed with a longitudinal bore 8 which is of a reduced diameter adjacent its inner end, as indicated at 9. The inner end of the enlarged portion of the bore forms a valve seat for the ball valve 10 and said valve is held normally upon its side by means of the expansion spring 11. This spring is secured at its outer end to a pin 12, which extends through the bore 8 and is secured at its ends to the plug.

The handle 3 may be filled with water after the plug 7, or both the plug and cap, have been removed from the end thereof. The water will prevent the handle from becoming overheated, unless, as it sometimes happens, the lifter should be left lying upon the stove. Should this happen the steam which is generated may escape through the plug and therefore there is no danger of the handle bursting.

From the foregoing description taken in connection with the accompanying drawings, it will be seen that I have provided a very simply constructed stove lid lifter, which may be cast in one piece and which is provided with a hollow handle that is closed by a cap and safety plug.

It is to be understood that while I have shown and described the preferred embodiment of my invention, I do not wish to be limited to this exact construction, combination, and arrangement of parts, but may make such changes as will fall within the spirit and scope of the invention.

Having thus described my invention, what I claim is:—

1. A stove lid lifter comprising a shank, a hollow handle formed integrally with said shank, the handle being adapted to receive water, an apertured cap threaded into one end of the handle, and a safety plug adapted to be inserted in the opening through said cap.

2. A stove lid lifter comprising a hollow handle open at one end, said handle being adapted to contain water, an apertured cap threaded within the open end of said handle, a plug inserted through the apertured cap, said plug being formed with a longitudinal bore reduced in diameter at its inner end, whereby a valve seat is provided, a ball valve, and spring means for holding said valve normally seated.

In testimony whereof I affix my signature in presence of two witnesses.

CHARLEY G. BURK.

Witnesses:
ROY BROCKMANN,
B. W. COUNTRYMAN.

Copies of this patent may be obtained for five cents each, by addressing the "Commissioner of Patents, Washington, D. C."