US 20050005293A1

(19) United States

(12) Patent Application Publication (10) Pub. No.: US 2005/0005293 A1

Park (43) Pub. Date: Jan. 6, 2005

(54) METHOD OF ACQUIRING PROGRAM GUIDE INFORMATION, PROGRAM GUIDE METHOD APPROPRIATE FOR THE SAME, AND PROGRAM GUIDE APPARATUS

(75) Inventor: **Ju-ha Park**, Yongin-city (KR)

Correspondence Address:
STAAS & HALSEY LLP
SUITE 700
1201 NEW YORK AVENUE, N.W.
WASHINGTON, DC 20005 (US)

(73) Assignee: **Samsung Electronics Co., Ltd.**, Suwon-si (KR)

(21) Appl. No.: **10/898,966**

(22) Filed: **Jul. 27, 2004**

Related U.S. Application Data

(62) Division of application No. 09/163,977, filed on Sep. 30, 1998.

(30) **Foreign Application Priority Data**

Sep. 5, 1998 (KR) 98-36628

Publication Classification

(51) **Int. Cl.**[7] **H04N 5/445**; G06F 3/00

(52) **U.S. Cl.** **725/50**; 725/39; 725/47

(57) **ABSTRACT**

A method acquires program guide information in an image signal receiver, and program guide method and apparatus using the same. In the program guide apparatus, information immediately required by a user is obtained first, and information of less preferential channels is obtained next, thus presenting a smooth interface to the user. The method of acquiring program guide information for channels includes acquiring the program guide information for each channel by scanning accessible channels while a received program is not displayed. The program guide apparatus includes a tuner tuning a channel, a program guide information detector, a memory, a key input, a microprocessor, and a character signal generator.

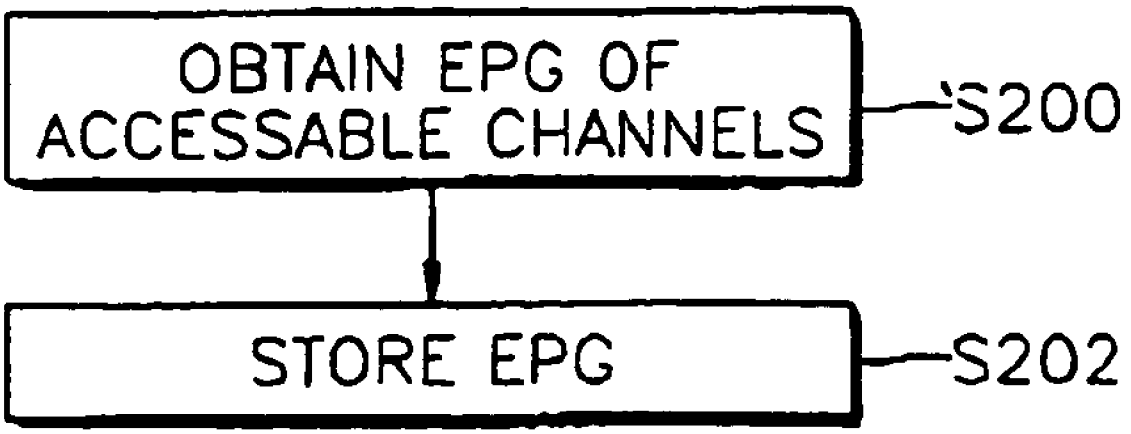

FIG. 1 (PRIOR ART)

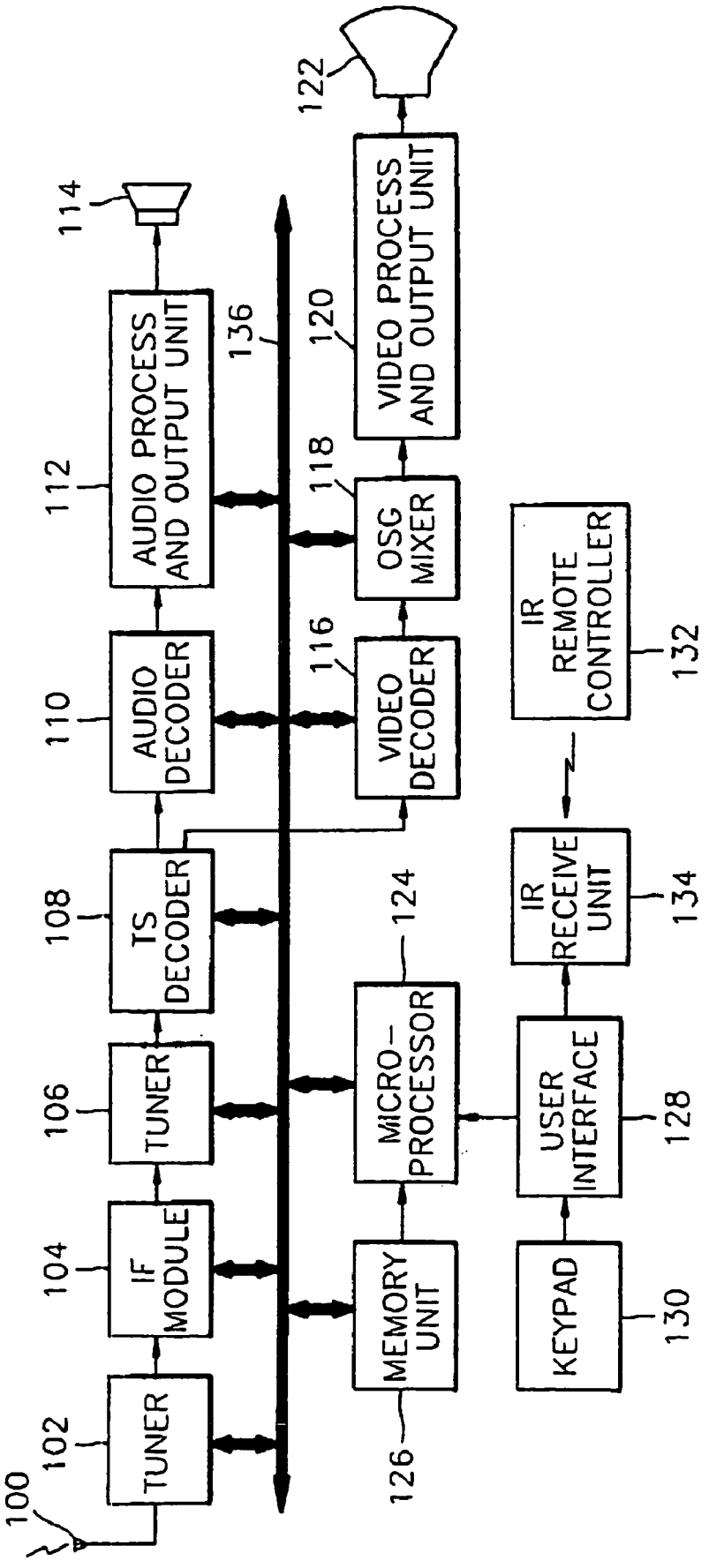

FIG. 2

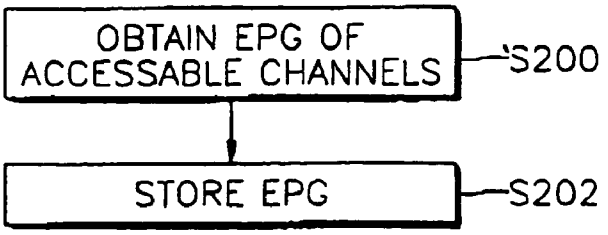
OBTAIN EPG OF ACCESSABLE CHANNELS
S200
STORE EPG
S202

FIG. 3

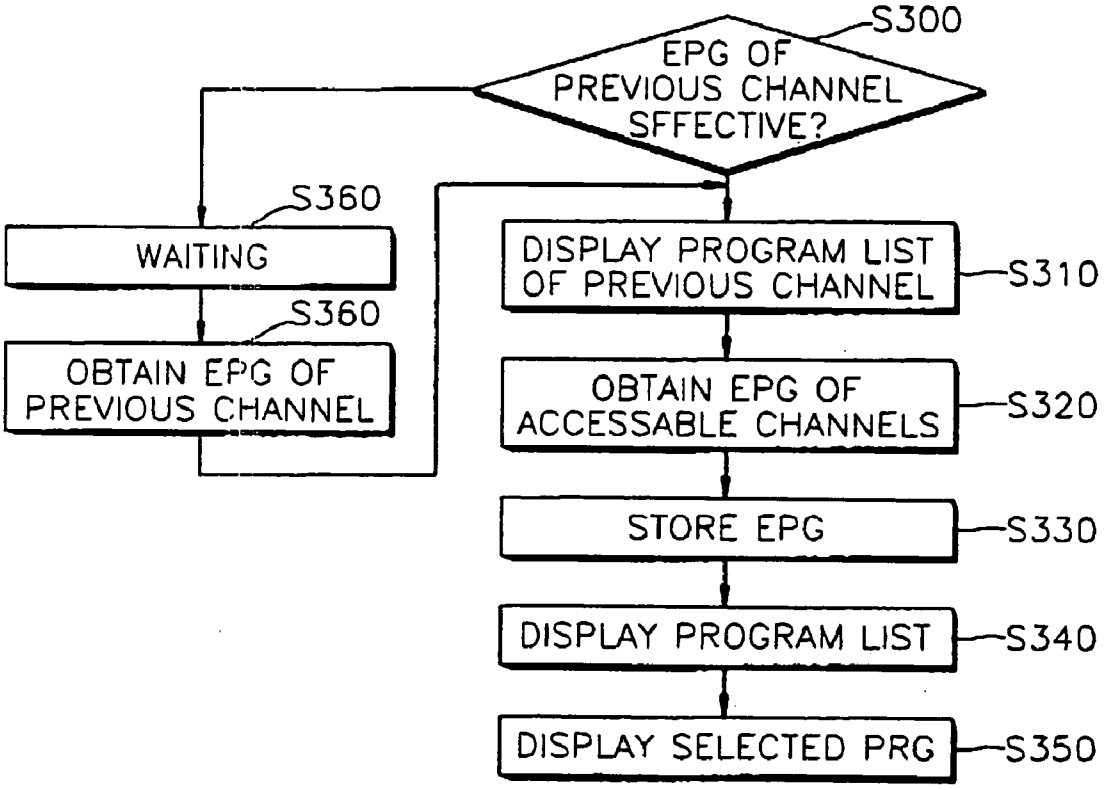
S300
EPG OF PREVIOUS CHANNEL SFFECTIVE?
S360
WAITING
S360
OBTAIN EPG OF PREVIOUS CHANNEL
DISPLAY PROGRAM LIST OF PREVIOUS CHANNEL
S310
OBTAIN EPG OF ACCESSABLE CHANNELS
S320
STORE EPG
S330
DISPLAY PROGRAM LIST
S340
DISPLAY SELECTED PRG
S350

FIG. 4A

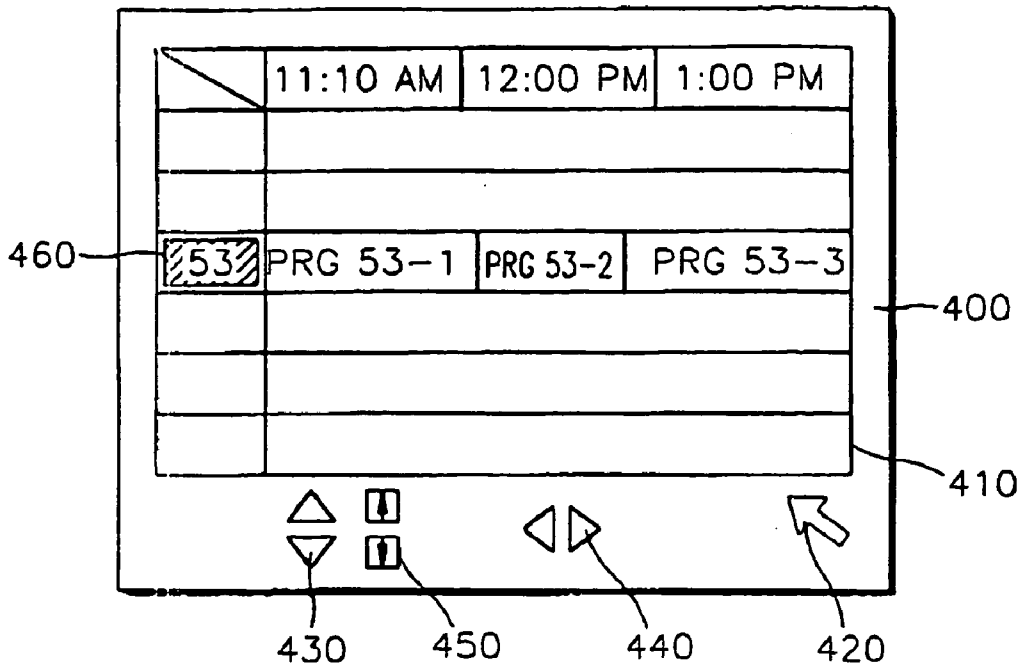
11:10 AM
12:00 PM
1:00 PM
53
PRG 53-1
PRG 53-2
PRG 53-3
460
400
410
430
450
440
420

FIG. 4B

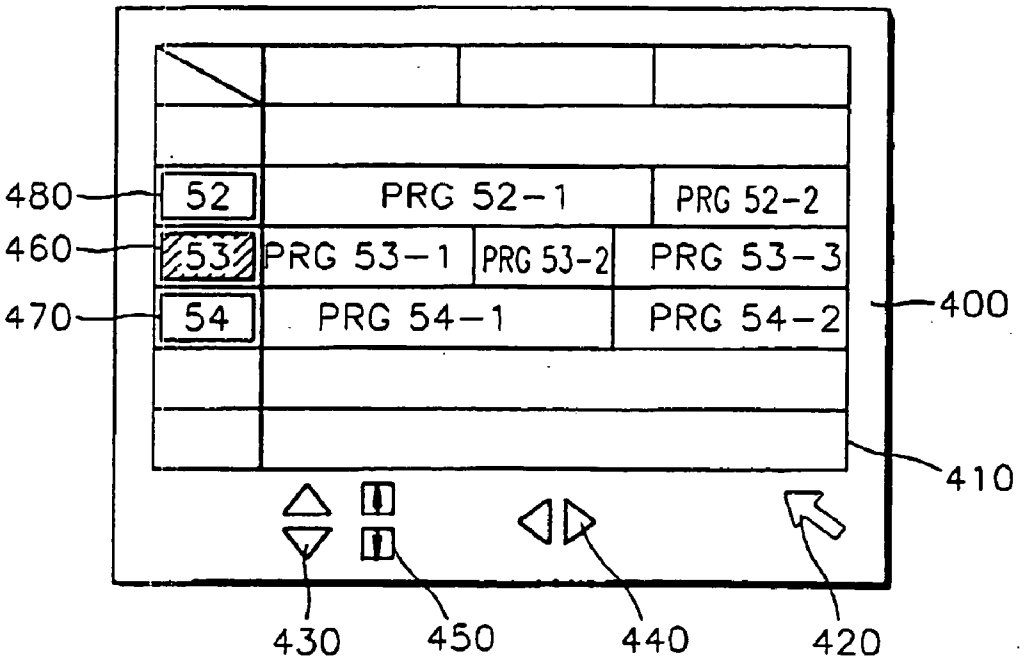
52
PRG 52-1
PRG 52-2
53
PRG 53-1
PRG 53-2
PRG 53-3
54
PRG 54-1
PRG 54-2
480
460
470
400
410
430
450
440
420

FIG. 4C

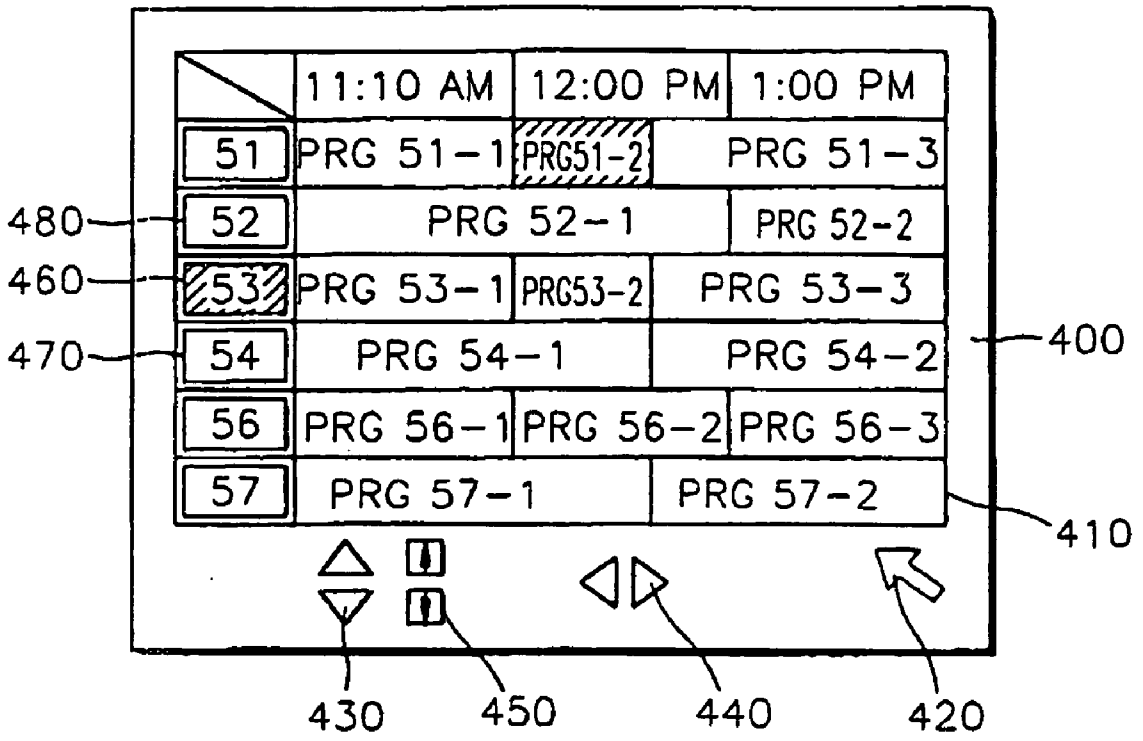
11:10 AM
12:00 PM
1:00 PM
51
PRG 51-1
PRG51-2
PRG 51-3
52
PRG 52-1
PRG 52-2
53
PRG 53-1
PRG53-2
PRG 53-3
54
PRG 54-1
PRG 54-2
56
PRG 56-1
PRG 56-2
PRG 56-3
57
PRG 57-1
PRG 57-2
480
460
470
400
410
430
450
440
420

FIG. 5

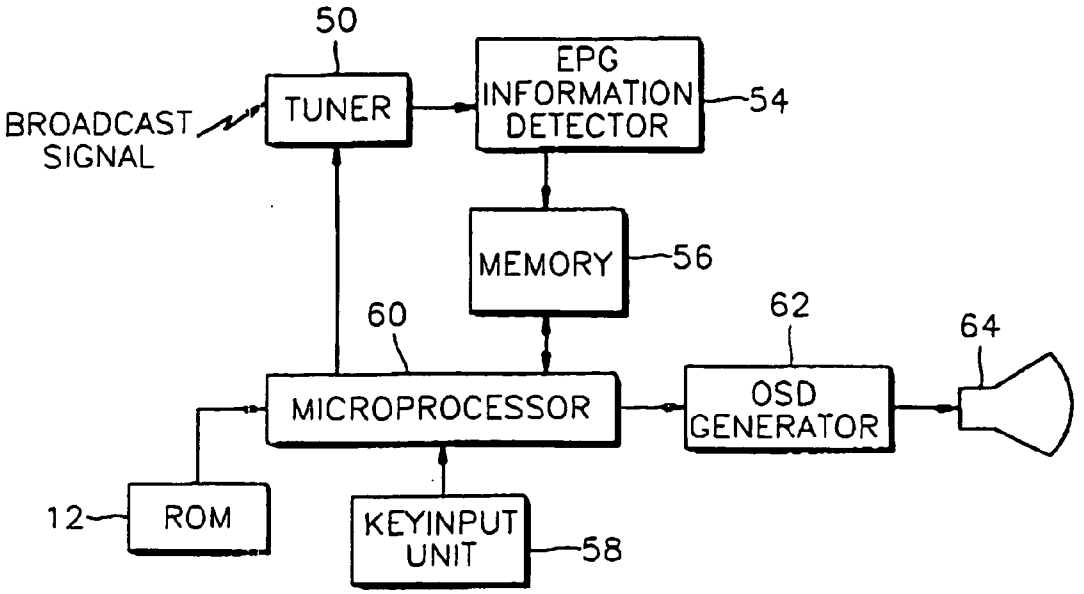
50
BROADCAST SIGNAL
TUNER
EPG INFORMATION DETECTOR
54
MEMORY
56
60
62
64
MICROPROCESSOR
OSD GENERATOR
12
ROM
KEYINPUT UNIT
58

FIG. 6

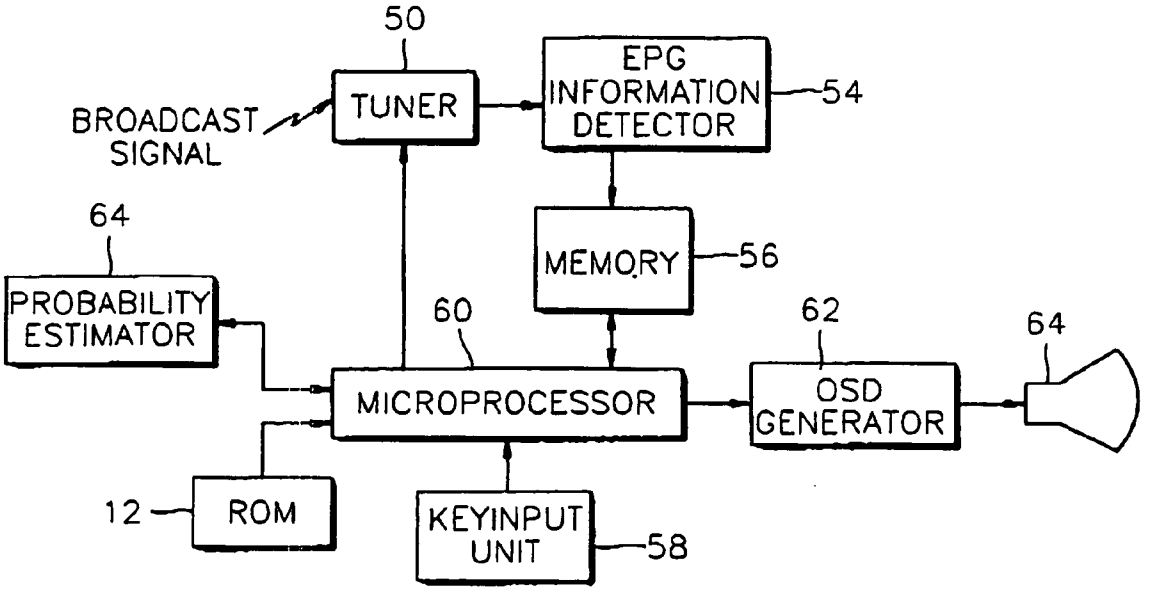
50
BROADCAST SIGNAL
TUNER
EPG INFORMATION DETECTOR
54
64
PROBABILITY ESTIMATOR
MEMORY
56
60
62
64
MICROPROCESSOR
OSD GENERATOR
12
ROM
KEYINPUT UNIT
58

METHOD OF ACQUIRING PROGRAM GUIDE INFORMATION, PROGRAM GUIDE METHOD APPROPRIATE FOR THE SAME, AND PROGRAM GUIDE APPARATUS

CROSS-REFERENCE TO RELATED APPLICATION

[0001] This application is a divisional application of application Ser. No. 09/163,977, filed Sep. 30, 1998 which is now pending. This application claims the benefit of Korean Application No. 98-36628, filed Sep. 5, 1998, in the Korean Industrial Property Office, the disclosure of which is incorporated herein by reference.

BACKGROUND OF THE INVENTION

[0002] 1. Field of the Invention

[0003] The present invention relates to a method of acquiring program guide information in an image signal receiving apparatus, and to a method and apparatus for guiding a program using the same.

[0004] 2. Description of the Related Art

[0005] Generally, program information of a conventional analog TV broadcast is supplied to publications such-as newspapers, TVs, magazines, etc. However, in a digital multichannel broadcast, tens to hundreds of channels are provided, so that a total number of the selections available to viewers becomes larger and simultaneously program selection is significantly complicated.

[0006] In such a digital broadcast, an electronic program guide (EPG) providing a program list or information on the content of each program is introduced as a fundamental data service.

[0007] Current EPG information is transmitted per channel. That is, since the EPG information of a corresponding channel is transmitted per channel, it is difficult to obtain the EPG information of all channels capable-of being accessed.

[0008] To be more specific, the EPG information of a current received channel can be obtained by interpreting additional information included in a transport packet received. However, in order to acquire EPG information of all channels capable of being accessed, a user must tune all channels individually.

[0009] In the digital broadcast, many more channels are provided than in the analog broadcast, and each channel can include subchannels. Therefore, it is important to swiftly interface the EPG information of each channel to a user.

SUMMARY OF THE INVENTION

[0010] To solve the above problems, it is an object of the present invention to provide a method of acquiring useful EPG information.

[0011] It is another object of the present invention to provide a program guide method appropriate for the above method.

[0012] It is still another object of the present invention to provide a program guide apparatus appropriate for the above method.

[0013] Accordingly, to achieve the first object, there is provided a method of acquiring program guide information for channels wherein the program guide information for each channel is acquired by scanning accessible channels while a received program is not displayed.

[0014] To achieve the second object, there is provided a program guiding method in which a program list for channels is displayed in response to a program guide command. The program guiding method comprises the steps of acquiring program guide information of accessible channels, storing the acquired program guide information, writing a program list on the basis of the stored program guide information, and displaying the written program list to the user.

[0015] Also to achieve the second object, the step of acquiring the program guide information comprises the steps of writing and displaying a program list including program guide information of channels tuned before a program guide command is executed, from the stored program guide information, and acquiring program guide information for each channel by searching for accessible channels in a background operation while the program list is referred to.

[0016] To achieve the third object, there is provided an apparatus for acquiring the program guide information of accessible channels and guiding program guide information acquired in response to a program guide command in a multichannel receiver. The apparatus comprises a tuner tuning a channel, a program guide information detector, a memory, a key input, a microprocessor, and a character signal generator.

[0017] The program guide information detector detects program guide information introduced via the tuner. The memory stores the program guide information for each channel detected by the program guide information detector. The key input introduces a user manipulation command such as a program guide command or a channel search command. The microprocessor writes a program list based on program guide information stored in the memory in response to the manipulation command input via the key input and is programmed to search for accessible channels by controlling the tuner in a background operation while a user refers to the program list. The character signal generator generates a character signal corresponding to the program list written by the microprocessor and provides the character signal to a screen.

BRIEF DESCRIPTION OF THE DRAWINGS

[0018] The above objects and advantages of the present invention will become more apparent by describing in detail a preferred embodiment thereof with reference to the attached drawings in which:

[0019] **FIG. 1** is a block diagram illustrating the configuration of a general DTV receiver;

[0020] **FIG. 2** is a flowchart illustrating a method of acquiring program guide information, according to the present invention;

[0021] **FIG. 3** is a flowchart illustrating a program guide method according to the present invention;

[0022] **FIGS. 4A through 4C** show a program list displayed on a screen in the method shown in **FIG. 3**;

[0023] **FIG. 5** is a block diagram illustrating an embodiment of a program guide apparatus according to the present invention; and

[0024] **FIG. 6** is a block diagram illustrating another embodiment of a program guide apparatus according to the present invention.

DETAILED DESCRIPTION OF THE PREFERRED EMBODIMENTS

[0025] Channel numbers, channel names, program names schedules, etc., generally transmitted as data are displayed on a TV screen as a program list having a time axis and a channel axis by EPG software of a receiver. A user can perform operations such as tuning or programming in the program list by manipulating a cursor.

[0026] **FIG. 1** is a block diagram showing the configuration of a conventional digital multichannel TV (hereinafter, called "DTV") receiver (which is also used in the present invention, as explained with reference to **FIG. 2**). In **FIG. 1**, a tuner **102** tunes a radio frequency (RF) channel from received broadcast signals via an antenna **100** under the control of a microprocessor **124**. The tuner **102** outputs an intermediate frequency (IF) signal of the tuned channel, and an IF module **104** outputs a baseband signal of the tuned channel to a channel decoder **106**.

[0027] The channel decoder **106** channel-decodes the baseband signal received from the IF module **104** and reproduces data bit lines. Each of the reproduced data bit lines is divided into audio data, video data, and additional data by a transport stream (TS) decoder **108**.

[0028] The audio data is transmitted to an audio decoder **110** and decoded according to an MPEG standard or dolby AC-3 standard by the audio decoder **110**. The audio data is processed by an audio processing and output unit **112** and output as sound through a speaker **114**.

[0029] The video data is transmitted to a video decoder **116**, decoded according to the MPEG standard, applied to an on-screen-display (OSD) mixer **118**, mixed with OSD data generated by the, microprocessor **124**, processed by a video processing and outputting unit **120**, and output on the screen of a picture tube **122**. Here. the OSD data is used for the microprocessor **124** to display various information as graphics or text on a screen.

[0030] The additional data is transmitted to the microprocessor **124**. The microprocessor **124** extracts program guide information or other information and stores the extracted information in a memory unit **126**. Typical EPG information is stored in a nonvolatile memory such as an EEPROM or a flash ROM.

[0031] A key pad **130** and an infra red (IF) receiving unit **134** are connected to the microprocessor **124**, which is a control unit of a DTV receiver, via a user interface **128**. The microprocessor **124** performs operations depending on various operation commands received from an IR remote controller **132** via the keypad **130** and the IR receiving unit **134**, according to a program stored in the memory **126**. Here, the IR remote controller **132** can be a wireless mouse such as an air mouse, a remote controller, etc.

[0032] A command from the IR remote controller is received as an IR signal by the IR receivin4 unit **134**, and transmitted to the microprocessor **124** via the user interface **128**. Also, the additional data from the TS decoder **108** is transmitted to the microprocessor **124**. Here, the additional data includes program specific information (PSI) organized as a table with respect to program associated information prescribed in MPEG-2, and the aforementioned EPG information.

[0033] The memory unit **126** includes a ROM for storing the program of the microprocessor **124**, a RAM for temporarily storing data created during the program execution in the microprocessor **124**, and an electrically erasable and programmable ROM (EEPROM) for storing various reference data.

[0034] The microprocessor **124** is connected via a bus **136** to the tuner **102**, the IF module **104**, the channel decoder **106**, the TS decoder **108**, the audio decoder **110**, the audio processing and outputting unit **112**, the video decoder **116**, the OSD mixer **118**, the video process and output unit **120**, and the memory unit **126**.

[0035] In the apparatus shown in **FIG. 1**, while a user selects and receives a channel, the microprocessor **124** detects, the EPG information from the additional data provided by the TS decoder **108**. The EPG information of a corresponding channel is stored in the memory unit **126**, and provided to a user in a program guide mode.

[0036] Since the EPG information is transmitted separately for each channel, the EPG information of a corresponding channel cannot be acquired if that channel is not tuned.

[0037] Thus, a program list for all channels cannot be provided in the program guide mode for guiding a program list for each channel to a user, in the conventional apparatus.

[0038] In the present invention, while a program of a channel tuned by the tuner **102** is not displayed, for example, while a user selects or programs a program with reference to EPG information displayed on a screen or views line input, an accessible channel is scanned in a background operation, to obtain the EPG information.

[0039] **FIG. 2** is a flowchart showing a method of obtaining program guide information according to the present invention. **FIG. 2** shows an example of obtaining EPG information in a program guide mode according to the present invention, using the conventional apparatus showing **FIG. 1**.

[0040] When a program guide command is input from a user via the keypad **130**, the apparatus shown in **FIG. 1** enters into a program guide mode. In the program guide mode, first, all channels capable of being accessed by the tuner **102** are scanned to obtain program guide information for each channel, in step **S200**. The microprocessor **124** controls the tuner **102** to scan as many channels as possible, and detects the program guide information for each channel from additional data introduced via the tuner **102**. Here, the accessible channels include not only the channels capable of being accessed by the tuner **102** but also line input.

[0041] Obtained EPG information is stored, in step **S202**.

[0042] The obtained EPG information is stored in the memory unit **126**. The EPG information is transmitted for each channel, so that the microprocessor **124** acquires EPG

information of a corresponding channel whenever a channel is changed and stores the acquired EPG information to the memory unit **126**.

[**0043**] According to the method of **FIG. 2**, when the program guide mode begins, program guide information with respect to all the accessible channels is acquired all at once in an initial stage. Thus, much time is required to display the program guide information.

[**0044**] An increase in the number of accessible channels requires a longer time to display the program guide information, and causes the user inconvenience. In particular, a digital broadcast provides tens or hundreds of channels, thus requiring a lot of time to acquire the EPG information of all channels.

[**0045**] To solve this problem, in the present invention, the EPG information of a prior channel among prioritized channels is first obtained, and the EPG information of a channel having the lowest priority is then obtained, thus accomplishing a smooth user interface.

[**0046**] The priority of the channel search is determined by the distance (interval) of the channels to the channel tuned before a program guide command is executed, or by a probability distribution of channels, i.e., the accumulation of the number of times which channels are selected.

[**0047**] A typical user searches using a channel up/down command, so it is natural for the user to search beginning with channels included in a currently-displayed program list and their closest channels.

[**0048**] Here, the closest channels include upper closest channels and lower closest channels, and it is preferable to determine by default which channel among the above closest channels is to be accessed first.

[**0049**] Also, it is necessary to change the direction of search according to the characteristics of a user, even if the search direction is determined by default. For example, even if the default search direction is set to be upward, once the user designates a channel down button, lower channels must be preferentially searched. It is preferable that in preparation for when a user changes the search direction in the middle of a search, a channel search direction is determined referring to a channel up/down command or page up/down command received just before determining a channel search.

[**0050**] **FIG. 3** is a flowchart illustrating a program guide method according to a preferred embodiment of the present invention. Response must be preferentially considered in the interface with a user. It is considered that a good response is provided if a system quickly responds to a command input by a user. The response is not considered good if a user must wait until program guide information for all channels is obtained after inputting the program guide command.

[**0051**] However, the user immediately needs program guide information of a channel viewed before the program guide command is executed, and program guide information of several channels adjacent to the channel viewed, not the program guide information for all channels.

[**0052**] In the present invention, the channel viewed before the program guide command is executed, and the program guide information of several channels adjacent to the above channel are first acquired and displayed to the user, thus improving the response.

[**0053**] Also, channels adjacent to channels displayed in preparation for the channel search by a user are first searched, and farther channels are then gradually searched, thus obtaining the program guide information of accessible channels.

[**0054**] Referring to **FIG. 3**, first, it is detected whether program guide information of a channel tuned before a program guide command is executed is effective, in step **S300**. Generally, a user executes a program guide command while receiving the program of a channel. The EPG information of a channel is automatically obtained while that channel is tuned, so that at least the program guide information of the channel tuned before the program guide command is executed can be considered effective.

[**0055**] In a display step **S310**, at least a program list of channels tuned before the program guide command is executed among stored EPG information is displayed. The microprocessor **124** writes a program list including channels tuned before the program guide command is executed among EPG information stored in the memory unit **126**, and provides the program list to the OSG mixer **118**. The OSG mixer **118** converts the program list provided by the microprocessor **124** into a character signal, and displays the character signal on a screen.

[**0056**] **FIG. 4A** shows the contents displayed on a screen as the result of the step **S310**. In **FIG. 4A**, reference numeral **400** is a screen, reference numeral **410** is a program list, reference numeral **420** is a cursor, reference numeral **430** is an up/down button, reference numeral **450** is a page up/down button, and reference numeral **440** is a lefuright scan button.

[**0057**] The program list **410** lists a program for each channel on channel and time axes. Channels listed in the program list **410** are controlled by the up/down button **430**, and time is controlled by the left/right scan button **440**.

[**0058**] A user can search for a channel and time of a desired program, using the up/down button **430** and the lefuright scan button **440**.

[**0059**] Whenever the up/down button **430** is pressed, a selection bar **460** moves between the listed channels. When the selection bar **460** departs from a screen boundary, the content of the program list **410** is renewed so that the next adjacent channel can be displayed.

[**0060**] If program guide information of channels tuned before the program guide command is executed is not effective or not stored, a screen display message like "please wait" or "obtaining program guide information" is displayed to the user, in step **S360**. If it takes a short time to obtain the program guide information of the tuned channel, this message display step may be omitted.

[**0061**] Then, program guide information of channels tuned before a program guide command is executed is obtained, in step **S370**. A program list including this program guide information is displayed, in step **310**.

[**0062**] In a program guide information acquiring step **S320**, program guide information for each channel is obtained by scanning accessible channels via the tuner **102** while a user views displayed EPG information.

[**0063**] To be more specific, in the program list shown in **FIG. 4**, an inverted channel number in a program list **410** of

a channel No.53 indicates that channel No.53 was viewed before a program guide mode.

[0064] In the circumstances where the program list as shown in **FIG. 4B** is displayed, channels are searched to obtain EPG information, in the following sequence.

[0065] If a channel No.52 is in an upper adjacent screen boundary **480** and a channel No. 54 are channels listed closest to a channel No.53, i.e., channels most adjacent, they have the highest preference.

[0066] If a channel No.51 is in an upper adjacent screen boundary **480** and a channel No. 56 is in a lower adjacent screen boundary **470** are channels listed next closest to the channel No.53, they have the next highest preferences after the channels No.52 and No.54.

[0067] If an upward search direction is determined by default, channels are searched for in the sequence of No.53, to No.52, to No.54, No.51, and No.56. In this instance, an upward search is conducted prior to a search in the downward direction. That is, a search is alternatingly executed in an upward direction and a downward direction with the upward search being executed first.

[0068] EPG information for each channel is stored in the memory unit **126** as soon as it is obtained, and the microprocessor **124** writes a new program list referring to this information and provides the new program to the OSG mixer **118**, in steps S**330** and S**340**. As a result, new program lists as shown in **FIGS. 4B and 4C** are sequentially displayed.

[0069] The sequence in which the EPG information is listed in the memory unit **126** is determined by a typical channel number. Also, when a channel has subchannels, the subchannels are listed after the main channel.

[0070] Accordingly, the microprocessor **124** already knows the listing sequence of the EPG information stored in the memory unit **126**, and also knows the channel viewed before the program guide mode, to determine one search sequence.

[0071] The sequence for searching for channels may not be determined according to adjacency (or proximity). For example, channels may be searched for upward or downward based on the channel viewed before the program guide mode. However, considering the response to the user, it is more proper that the channel search sequence be determined according to the adjacency between channels instead of just to those closest to the channels shown in adjacent screen boundaries **470** and **480**.

[0072] The channel search sequence may be changed by the search preference of a user. For example, if a user manipulates the channel up/down button **430** referring to a screen shown in **FIG. 4C**, a continuous search in a direction to be indicated later can be expected. Thus, when a channel up operation is indicated, the channel search operation may be limited to upper channels instead of just to those closest to the channel shown in adjacent screen boundaries **470** and **480**.

[0073] The channel search sequence can be determined referring to past viewing tendencies of users. This determines the probability that a channel is to be tuned based on the accumulated frequency of channels tuned by a user. A channel having a higher probability is searched for earlier.

[0074] In a storing step S**330** of **FIG. 3**, the obtained EPG information is stored in the memory unit **126**. Here, the obtained program guide information can be renewed only when there is a difference between the obtained program guide information and program guide information stored in the memory unit **126**.

[0075] The obtained EPG information is stored in the memory unit **126**. Since the EPG information is transmitted by channels, the microprocessor **124** acquires EPG information of a corresponding channel whenever a channel is changed, and stores the acquired EPG information in the memory unit **126**.

[0076] A program list is displayed, in step S**340**.

[0077] The microprocessor **124** accesses the program guide information stored in the memory unit **126** to generate the program list as shown in **FIGS. 4A through 4C**. The program list generated by the microprocessor **124** is displayed on a screen via the OSG mixer **118**.

[0078] The program list is controlled according to a channel up/down command or page up/down command from a user, and when a channel selection command is applied by the user, the program of a selected channel is displayed, in step S**350**.

[0079] According to the program guiding method of the present invention, the longer it takes for a user to refer to the program list, the program guide information of more channels can be obtained. However, the program guide information of channels immediately required by a user can be sufficiently acquired even in a short searching time.

[0080] According to the method shown in **FIG. 3**, while a program is selected referring to the EPG information displayed by a user, accessible channels are scanned in a background operation unnoticeable to a user, thus obtaining the EPG information. Also, the EPG information is obtained referring to the search direction of a user, thus accomplishing a smooth interface with the user.

[0081] Furthermore, in order to obtain the program guide information, the program guide information of a preferential channel is obtained first and provided to a user. Therefore, a user does not need to wait until the program guide information of all the channels is obtained, increasing convenience.

[0082] In the program guide method shown in **FIG. 3**, the program list as shown in **FIG. 4C** may be displayed in the display step S**310**. This is the case when a program list including a channel viewed before and channels adjacent to the channel is displayed in the initial stage of a program guiding operation.

[0083] According to an advanced television standard committee (ATSC) standard, the EPG information is recommended to be transmitted in a quantity of at least 8 hours to a maximum of 584 hours, at time intervals of 3 hours. Thus, erroneous program guide information is less likely to be displayed if a program guide command is performed within 384 hours at maximum.

[0084] Accordingly, it is acceptable to display the program list including a channel viewed before the program guide mode and several channels adjacent to the channel.

[0085] However, a program may be changed by the circumstances of a broadcasting station, or unstored program guide information may be requested. Thus, it is preferable that channels are searched for by the above-described searching method even after the program list including the channel viewed before the program guide mode and several channels adjacent to the channel is displayed, to again obtain a program guide.

[0086] Meanwhile, when the program list including the channel viewed before the program guide mode and several channels adjacent to that channel is displayed in the initial stage of the program guide operation, possible erroneous information of some channels can be replaced with correct information by searching for channels using the aforementioned search method.

[0087] **FIG. 5** is a block diagram illustrating the configuration of a program guide apparatus according to the present invention. As shown in **FIG. 5**, the apparatus includes a tuner **50**, a ROM **52**, a program guide information detector **54**, a memory **56**, a key input unit **58**, a microprocessor **60**, and an OSD generator **62**.

[0088] The tuner **50** is tuned to a broadcast signal of a tuned channel. The program guide information detector **54** detects EPG information from the broadcast signal of a channel tuned by the tuner **50**. The detected EPG information is stored in the memory **56**.

[0089] The microprocessor **60** writes a program list from the EPG information stored in the memory **56** according to a program stored in the ROM **52**, and provides the program list to the OSD generator **62**. The OSD generator **62** converts the program list written from the EPG information stored in the memory **56** into a character signal to display the program list to a CRT **64**.

[0090] The microprocessor **60** controls tuning of the tuner **50** in the background operation while the program list is displayed on the CRT **64**, i.e., while the viewer does not watch any broadcast program via the tuner, to obtain EPG information of the accessible channels.

[0091] The microprocessor **60** searches for channels in a programmed channel searching sequence. This channel searching sequence depends on the sequence of channels which are displayed in the program guide mode.

[0092] When the channel up/down command is input via the key input unit **58** during channel search, the microprocessor **60** changes the channel searching sequence referring to the, input channel up/down command.

[0093] When the EPG information is not stored in the memory **56**, the microprocessor **60** generates a message of "please wait" or "acquiring guide information". When at least a current channel and current program guide information are obtained, the microprocessor **60** generates a program list corresponding, to the stored program guide information.

[0094] **FIG. 6** is a block diagram illustrating another embodiment of a program guide apparatus according to the present invention. Units shown in **FIG. 6** performing the same operations as those in **FIG. 5** are referred to by the same reference numerals, and will not be described again. The apparatus of **FIG. 6** further comprises a probability estimator **64** in addition to the components of the apparatus of **FIG. 5**.

[0095] The probability estimator **64** accumulates the number of times channels are tuned (or selected) by a user, and calculates the probability that each channel will be selected, according to the accumulated value. It can be estimated that the probability of selecting a channel is high as a channel is selected more often.

[0096] The microprocessor **124** determines the order of priority of channel search according to the probability calculated by the probability estimator **64**.

[0097] In the program guide information acquiring method according to the present invention as described above, while a viewer does not watch the program of any channel tuned in a tuner, program guide information of accessible channels is obtained in a background operation. Therefore, the program guide information of the accessible channels can be obtained by only a single tuner.

[0098] Furthermore, in the program guide method and apparatus according to the present invention, information immediately required by a user is obtained first, and information of less preferential channels is obtained next, thus smoothing the interface with the user.

What is claimed is:

1. A method to display program guide information for a set of accessible channels, comprising:

judging which channel among the set of accessible channels is currently tuned into;

determining a priority level of each remaining channel based on a predetermined relationship between the remaining channel to the currently tuned in channel;

acquiring program guide information, which is associated with the currently tuned in channel and a first set of the remaining accessible channels found to have priority over a second set of the remaining channels, after a program guide mode is entered; and

displaying the acquired program guide information for the currently tuned in channel and the first set of remaining accessible channels while program guide information for the second set of remaining accessible channels is acquired in a background operation.

2. The method according to claim 1, wherein the determining comprises judging a numerical distance between the currently tuned in channel and each remaining accessible channel.

3. The method according to claim 2, wherein the determining further comprises judging that the remaining accessible channels that are numerically near the currently tuned in channel have the high priority level.

4. The method according to claim 2, wherein the judging proceeds in a numerically upward and downward alternating direction from the currently tuned in channel.

5. The method according to claim 2, wherein the judging proceeds in a numerically upward direction from the currently tuned in channel.

6. The method according to claim 2, wherein the judging proceeds in a numerically downward direction from the currently tuned in channel.

7. The method according to claim 1, wherein the determining comprises judging a probability that a remaining accessible channel will be tuned into.

* * * * *