US 20090252302A1

(19) **United States**

(12) **Patent Application Publication**

Monroe

(10) **Pub. No.: US 2009/0252302 A1**

(43) **Pub. Date: Oct. 8, 2009**

(54) **EMERGENCY TELEPHONE WITH INTEGRATED SURVEILLANCE SYSTEM CONNECTIVITY**

(76) Inventor: **David A. Monroe**, San Antonio, TX (US)

Correspondence Address:
MOORE LANDREY
1609 SHOAL CREEK BLVD, SUITE 100
AUSTIN, TX 78701 (US)

(21) Appl. No.: **12/207,865**

(22) Filed: **Sep. 10, 2008**

Related U.S. Application Data

(63) Continuation of application No. 10/163,679, filed on Jun. 5, 2002, now Pat. No. 7,428,002.

Publication Classification

(51) **Int. Cl.**

H04M 11/04	(2006.01)
H04N 7/18	(2006.01)
H04L 12/66	(2006.01)

(52) **U.S. Cl.** **379/37**; 348/143; 370/352; 348/E07.085

(57) **ABSTRACT**

Embodiments provide an emergency telephone system including an emergency telephone, an interface connecting the emergency telephone to a network, a camera on the network, the camera being focused on the emergency telephone, a control system for activating the camera, and a monitoring station for displaying camera captured data.

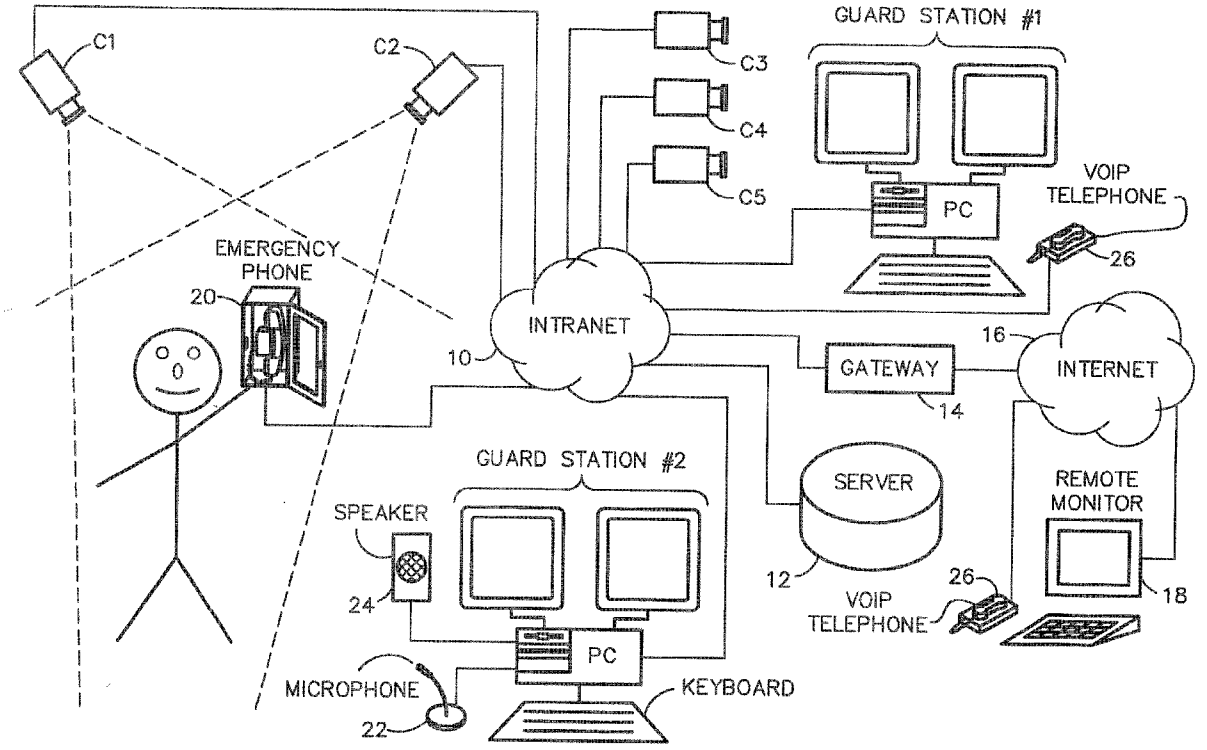

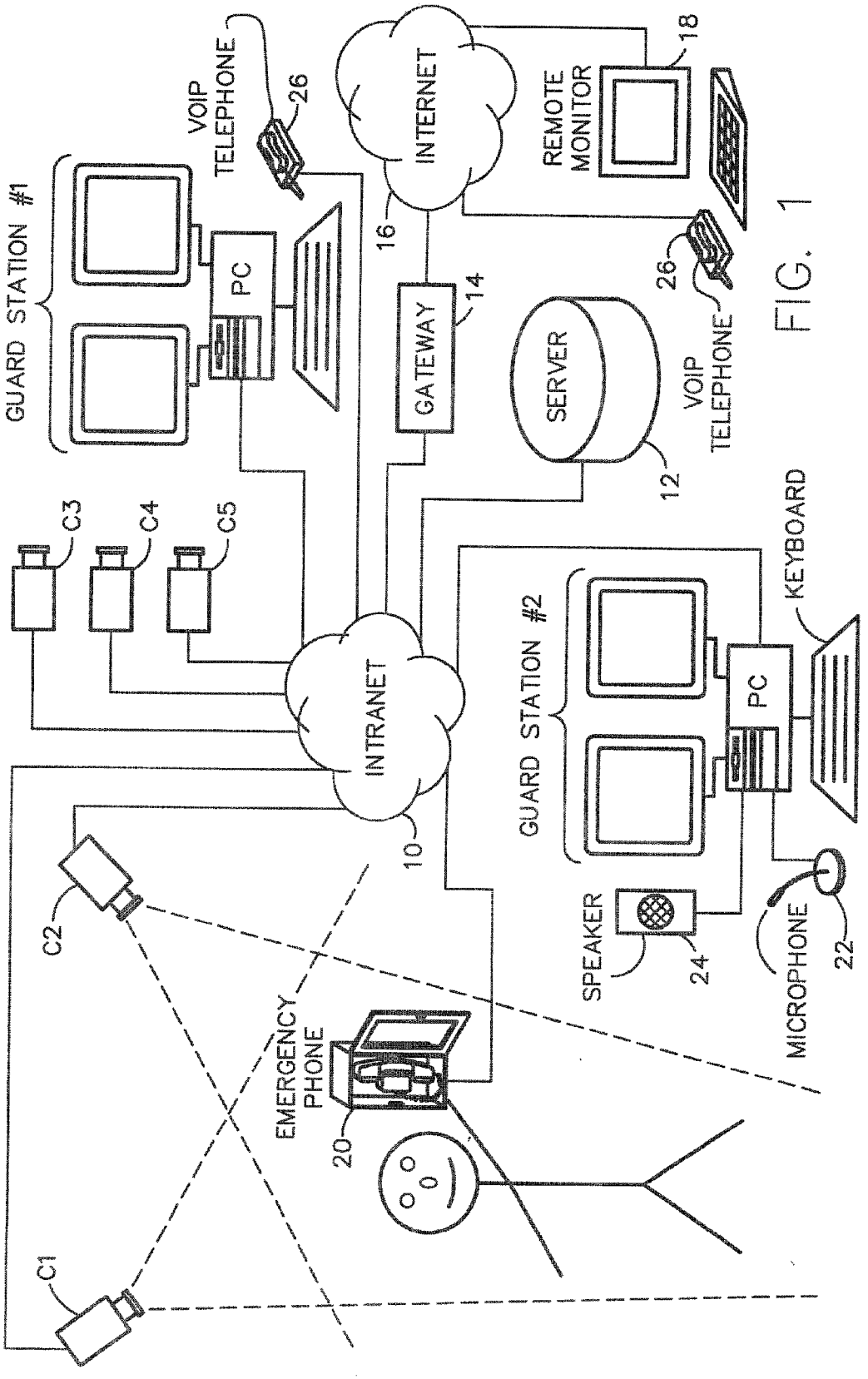
GUARD STATION #1
PC
VOIP TELEPHONE
26
INTERNET
16
REMOTE MONITOR
18
26
VOIP TELEPHONE
GATEWAY
14
SERVER
12
C3
C4
C5
INTRANET
10
GUARD STATION #2
PC
KEYBOARD
C2
C1
EMERGENCY PHONE
20
SPEAKER
24
MICROPHONE
22

FIG. 1

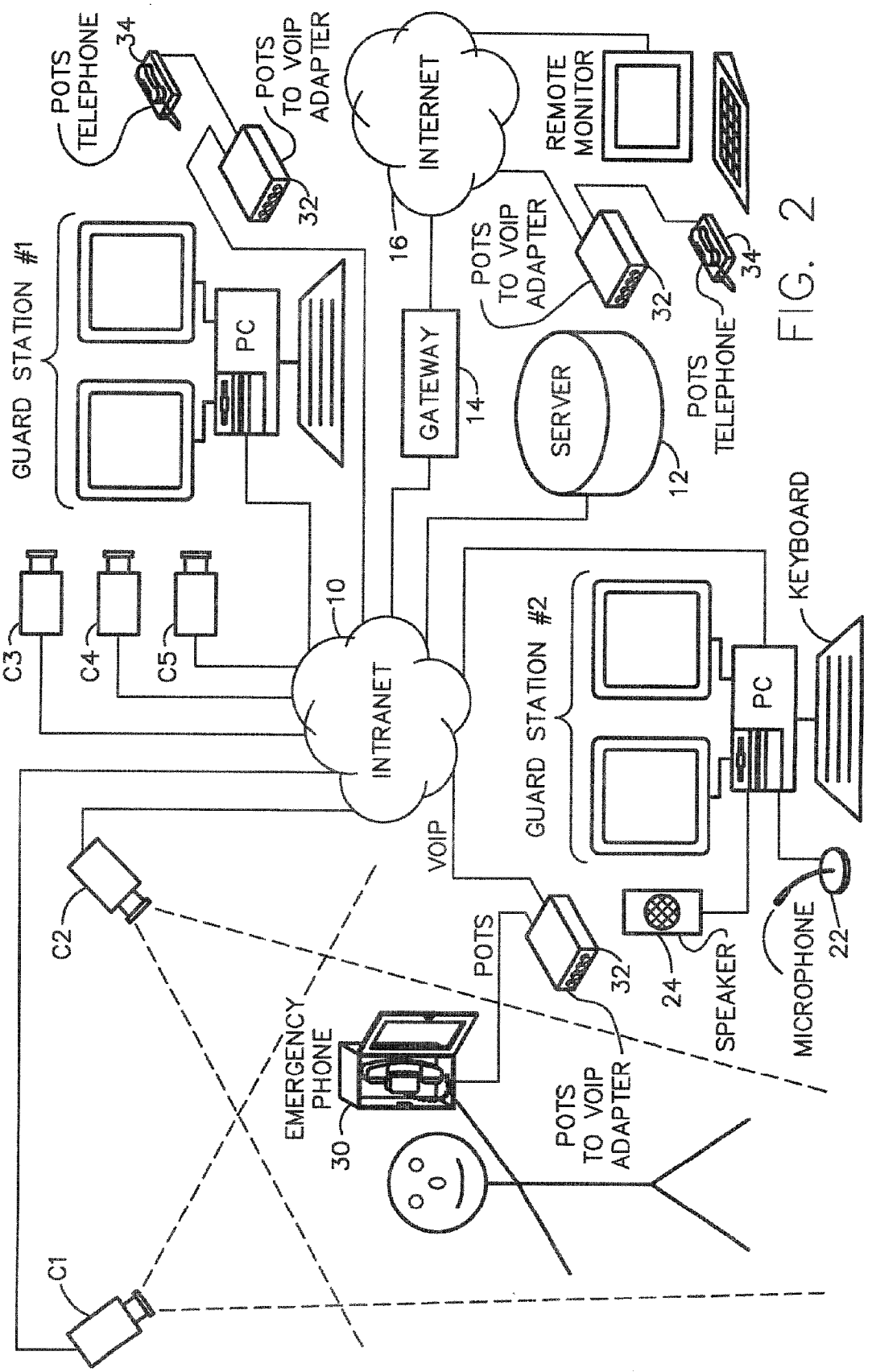
POTS TELEPHONE
34
POTS TO VOIP ADAPTER
32
INTERNET
16
REMOTE MONITOR
GUARD STATION #1
PC
GATEWAY
14
POTS TO VOIP ADAPTER
32
34
POTS TELEPHONE
SERVER
12
C3
C4
C5
10
INTRANET
KEYBOARD
GUARD STATION #2
PC
VOIP
C2
POTS
32
24
SPEAKER
MICROPHONE
22
EMERGENCY PHONE
30
POTS TO VOIP ADAPTER
C1

FIG. 2

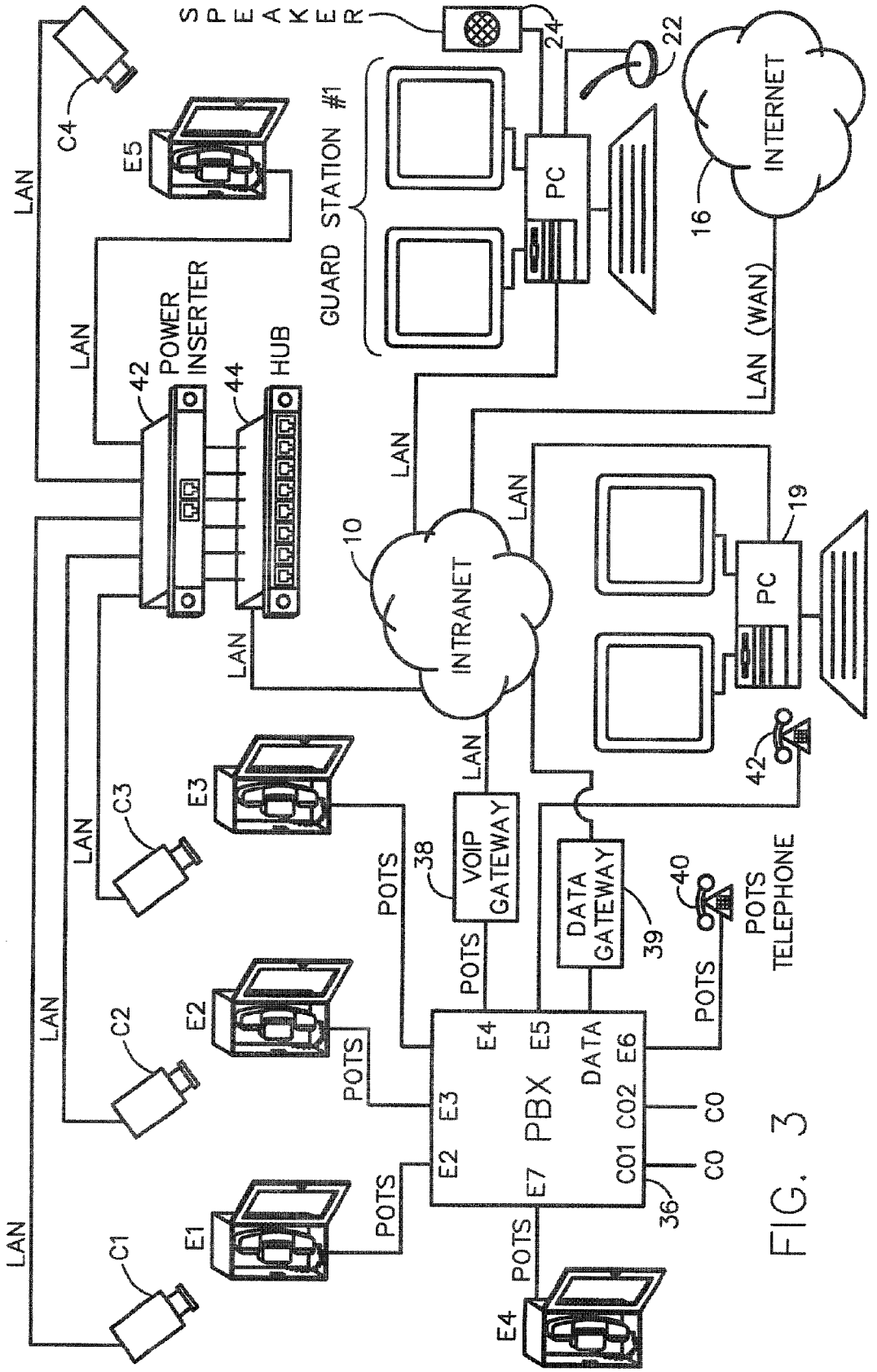
SPEAKER
24
22
INTERNET
16
GUARD STATION #1
PC
LAN (WAN)
LAN
C4
E5
POWER INSERTER
42
HUB
44
10
INTRANET
19
PC
42
C3
E3
C2
E2
C1
E1
POTS
38
VOIP GATEWAY
DATA GATEWAY
39
40
POTS TELEPHONE
PBX
E2
E3
E4
E5
DATA
E6
E7
CO1
CO2
CO
36
E4

FIG. 3

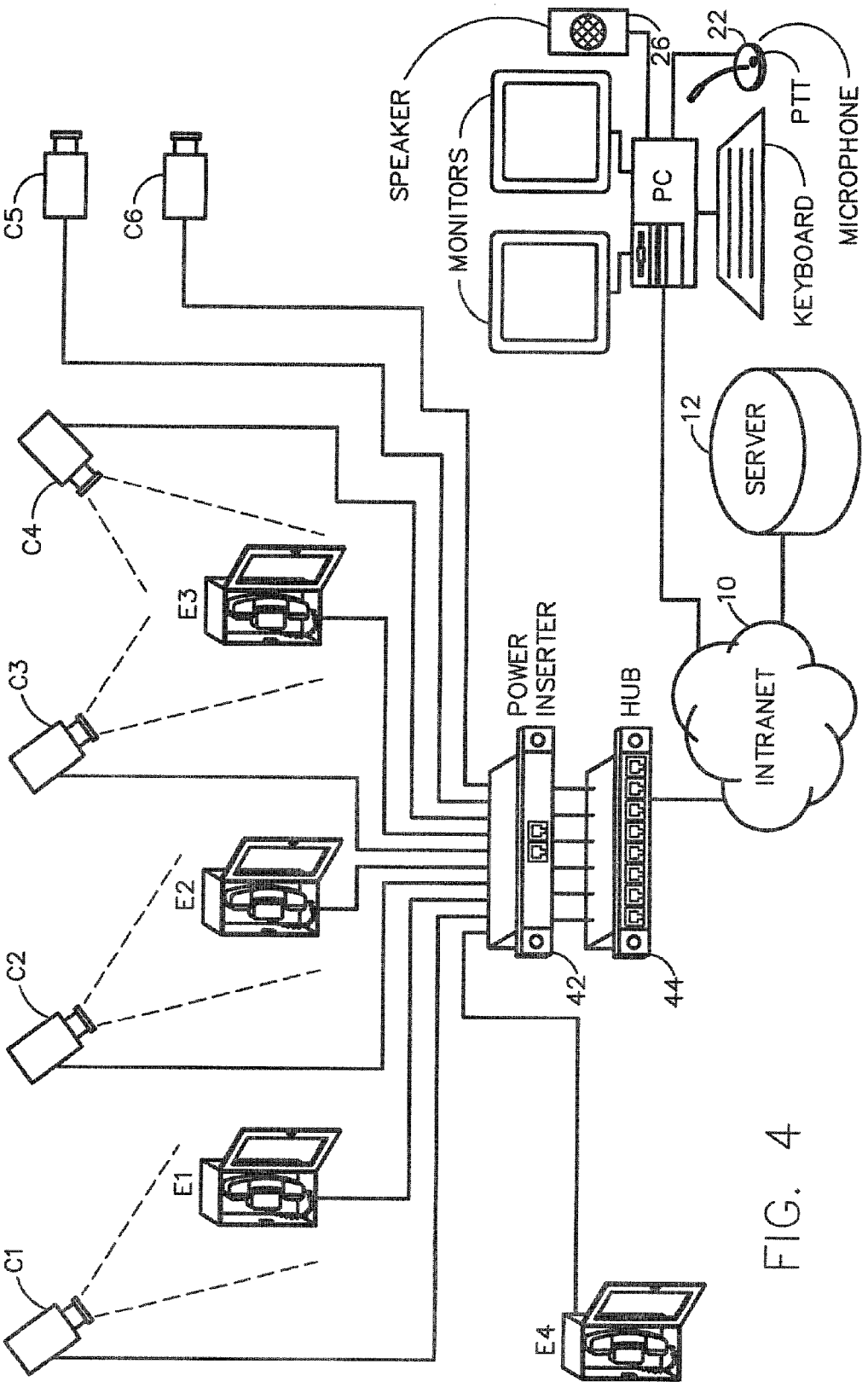
SPEAKER
MONITORS
PC
KEYBOARD
PTT
MICROPHONE
22
26
C5
C6
C4
C3
C2
C1
E3
E2
E1
E4
SERVER
12
10
INTRANET
POWER INSERTER
HUB
42
44

FIG. 4

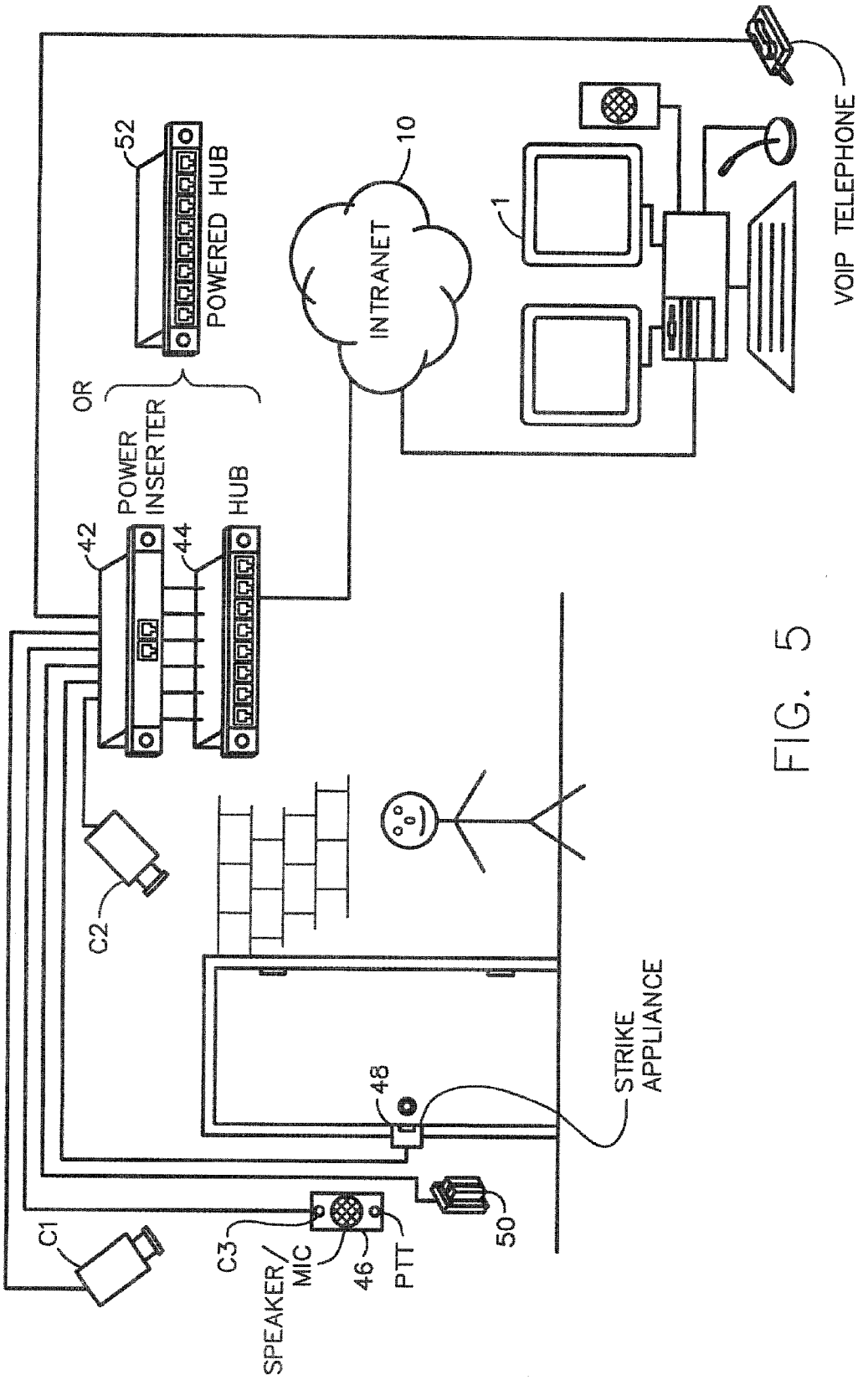
VOIP TELEPHONE
1
INTRANET
10
52
POWERED HUB
OR
POWER INSERTER
42
HUB
44
C2
STRIKE APPLIANCE
48
C1
C3
SPEAKER/ MIC
46
PTT
50

FIG. 5

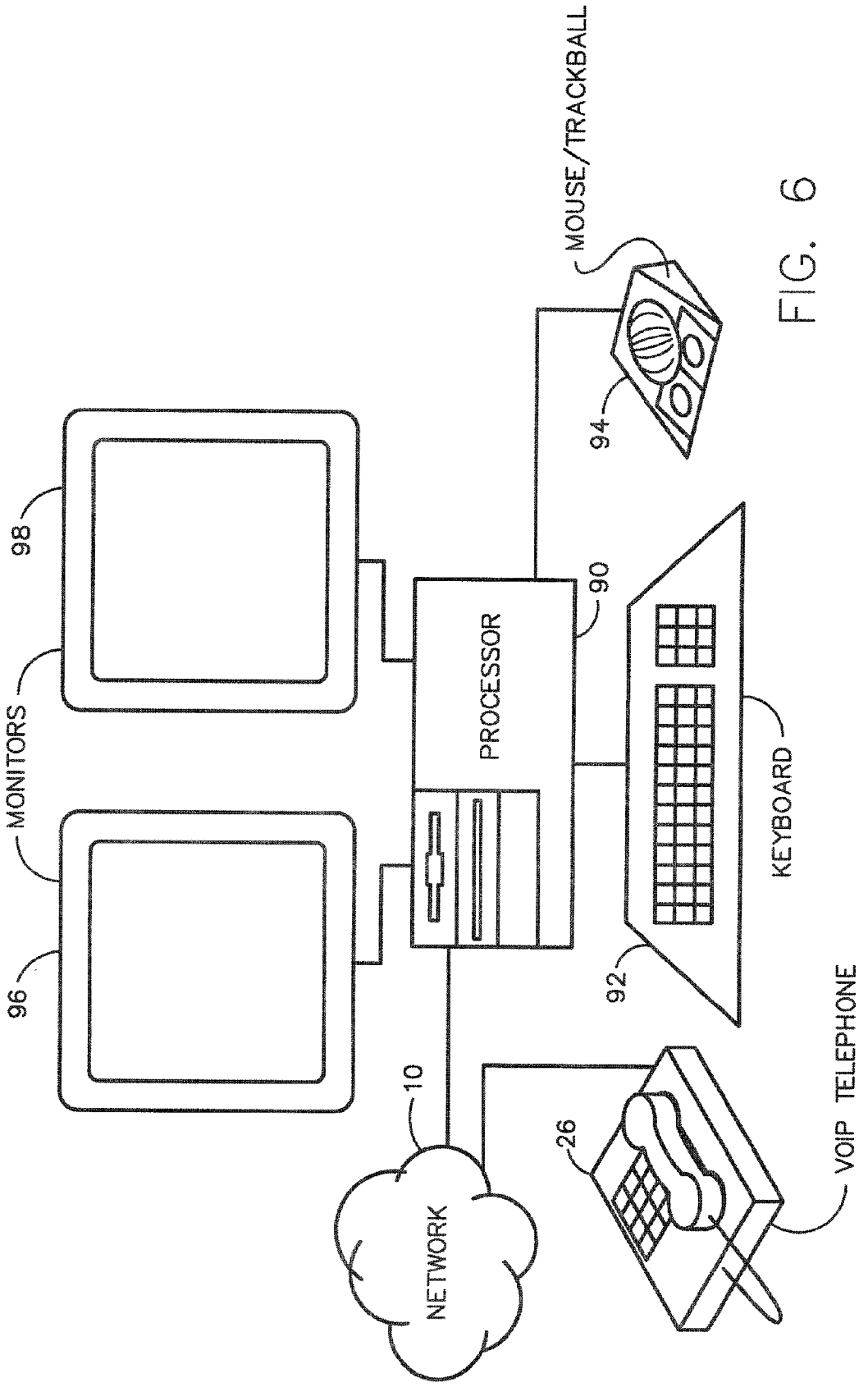
MOUSE/TRACKBALL
94
98
MONITORS
96
PROCESSOR
90
KEYBOARD
92
10
NETWORK
26
VOIP TELEPHONE

FIG. 6

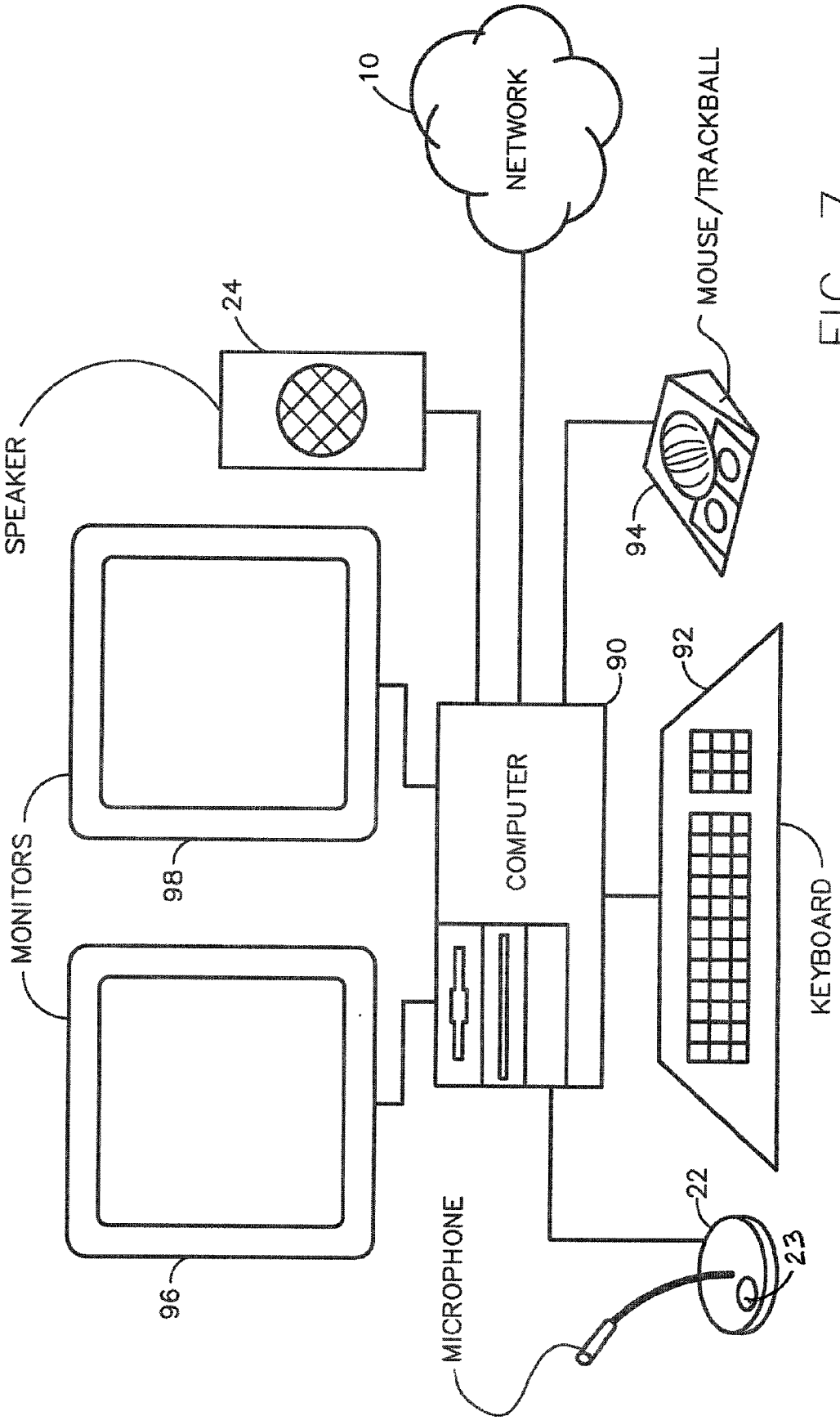
10
NETWORK
24
SPEAKER
MOUSE/TRACKBALL
94
MONITORS
98
96
COMPUTER
90
92
KEYBOARD
MICROPHONE
22
23

FIG. 7

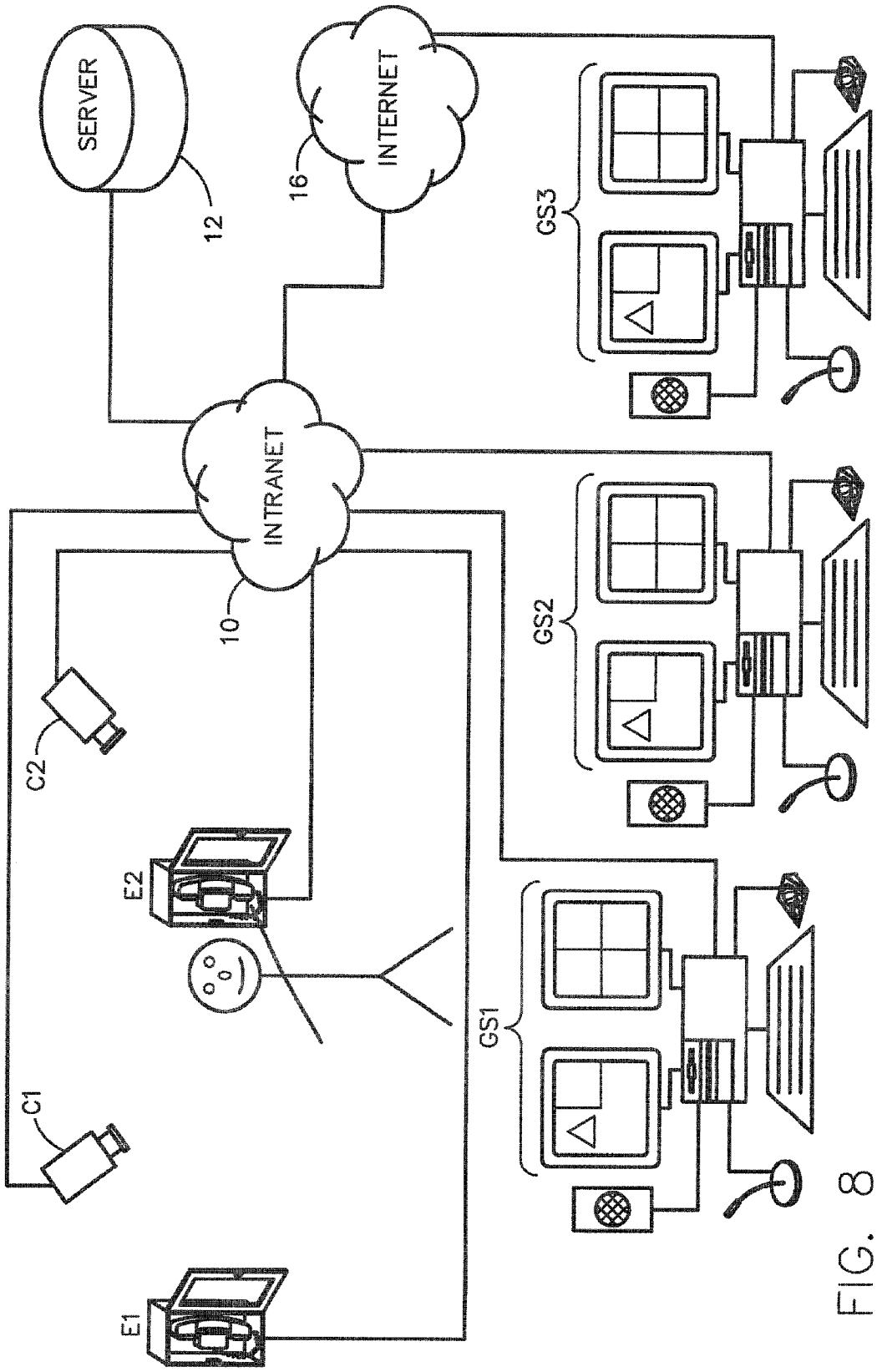

FIG. 8

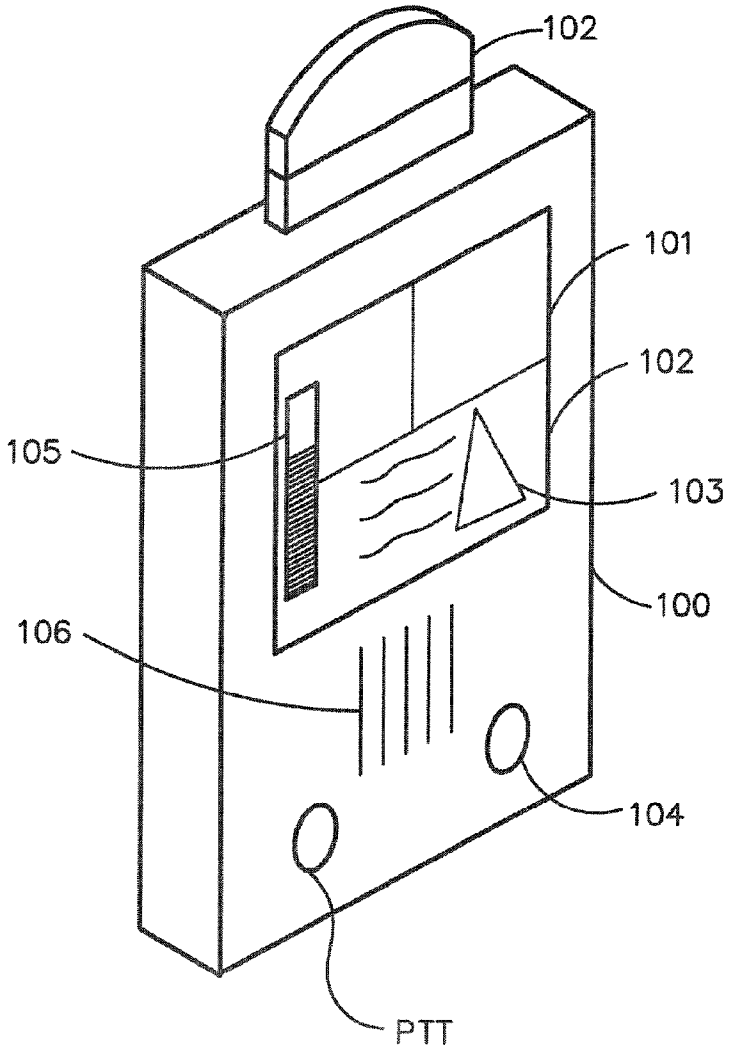

FIG. 9

FIG. 10

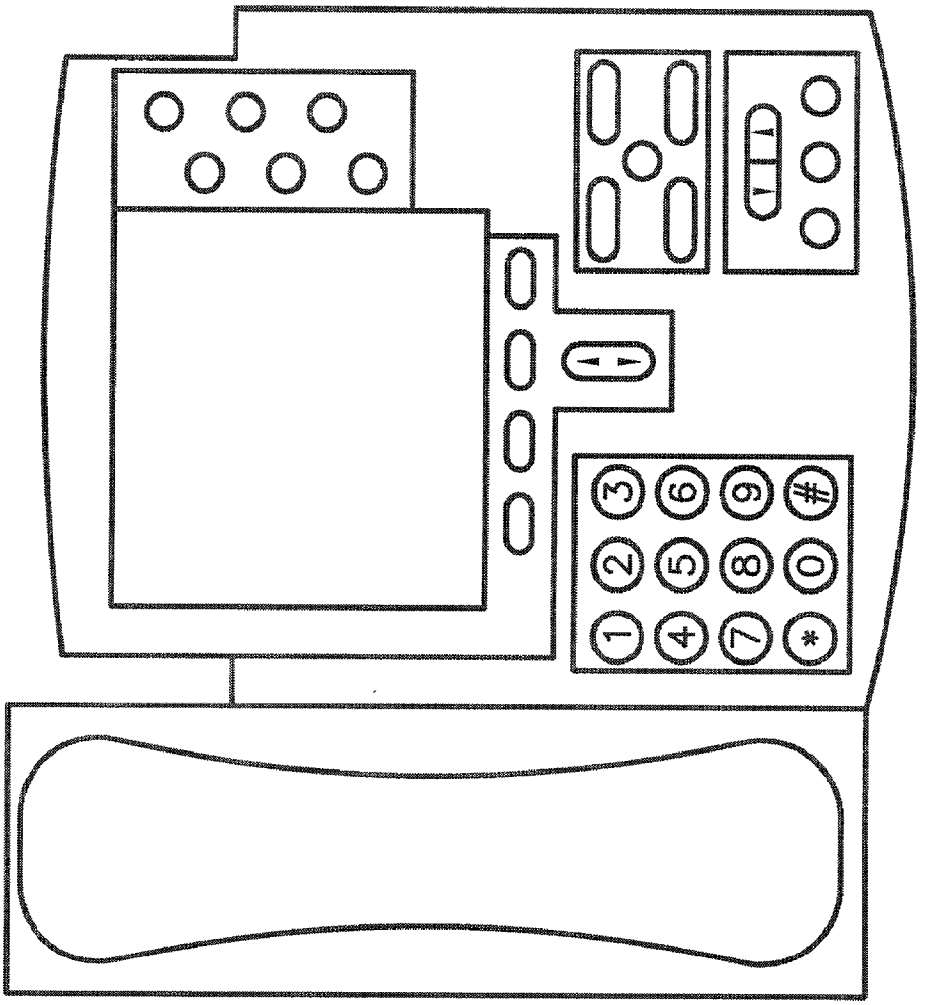

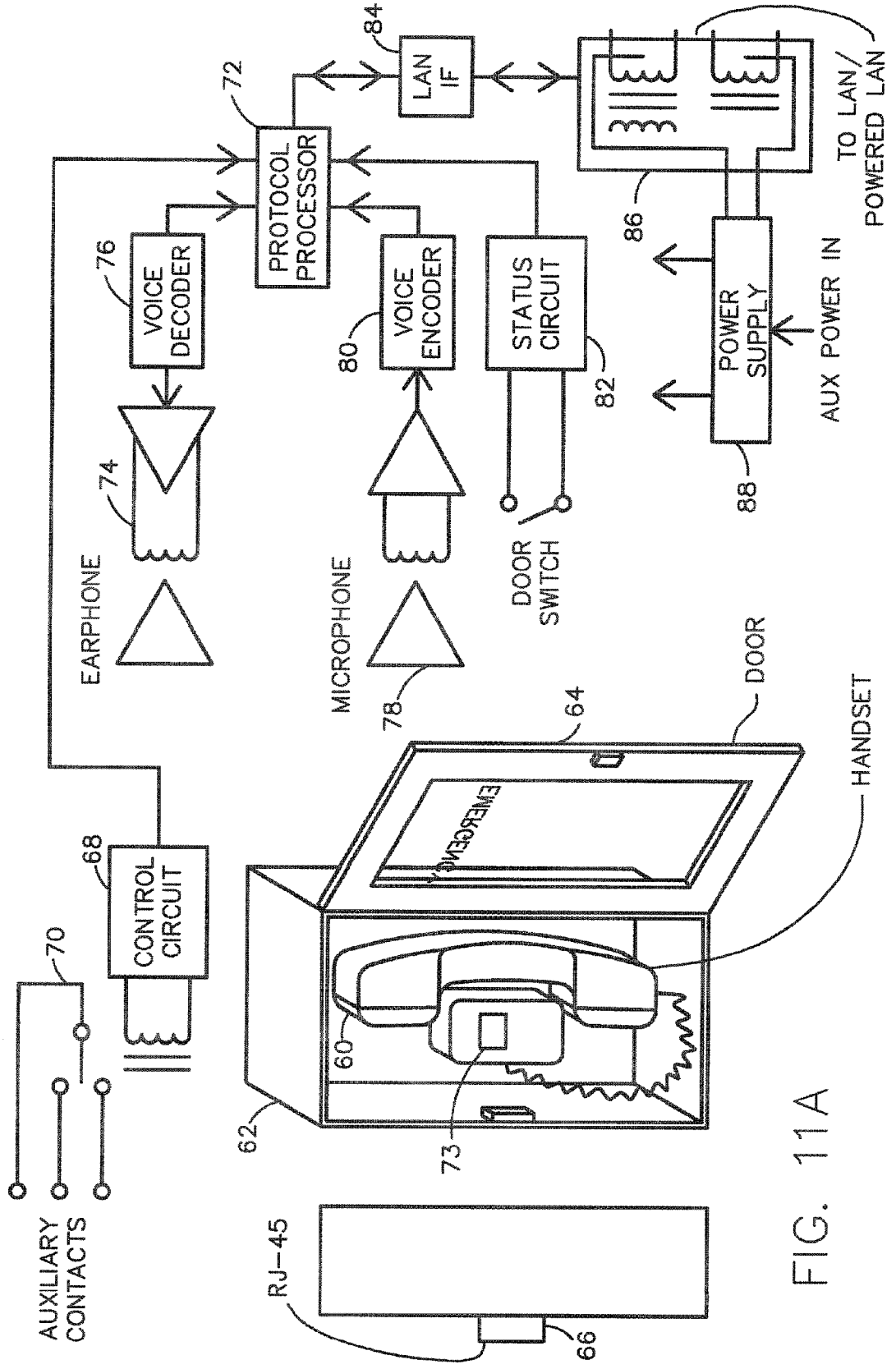
AUXILIARY CONTACTS
70
CONTROL CIRCUIT
68
VOICE DECODER
76
EARPHONE
74
PROTOCOL PROCESSOR
72
LAN IF
84
VOICE ENCODER
80
MICROPHONE
78
STATUS CIRCUIT
82
DOOR SWITCH
POWER SUPPLY
88
AUX POWER IN
86
TO LAN/ POWERED LAN
DOOR
64
HANDSET
EMERGENCY
60
62
73
RJ-45
66

FIG. 11A

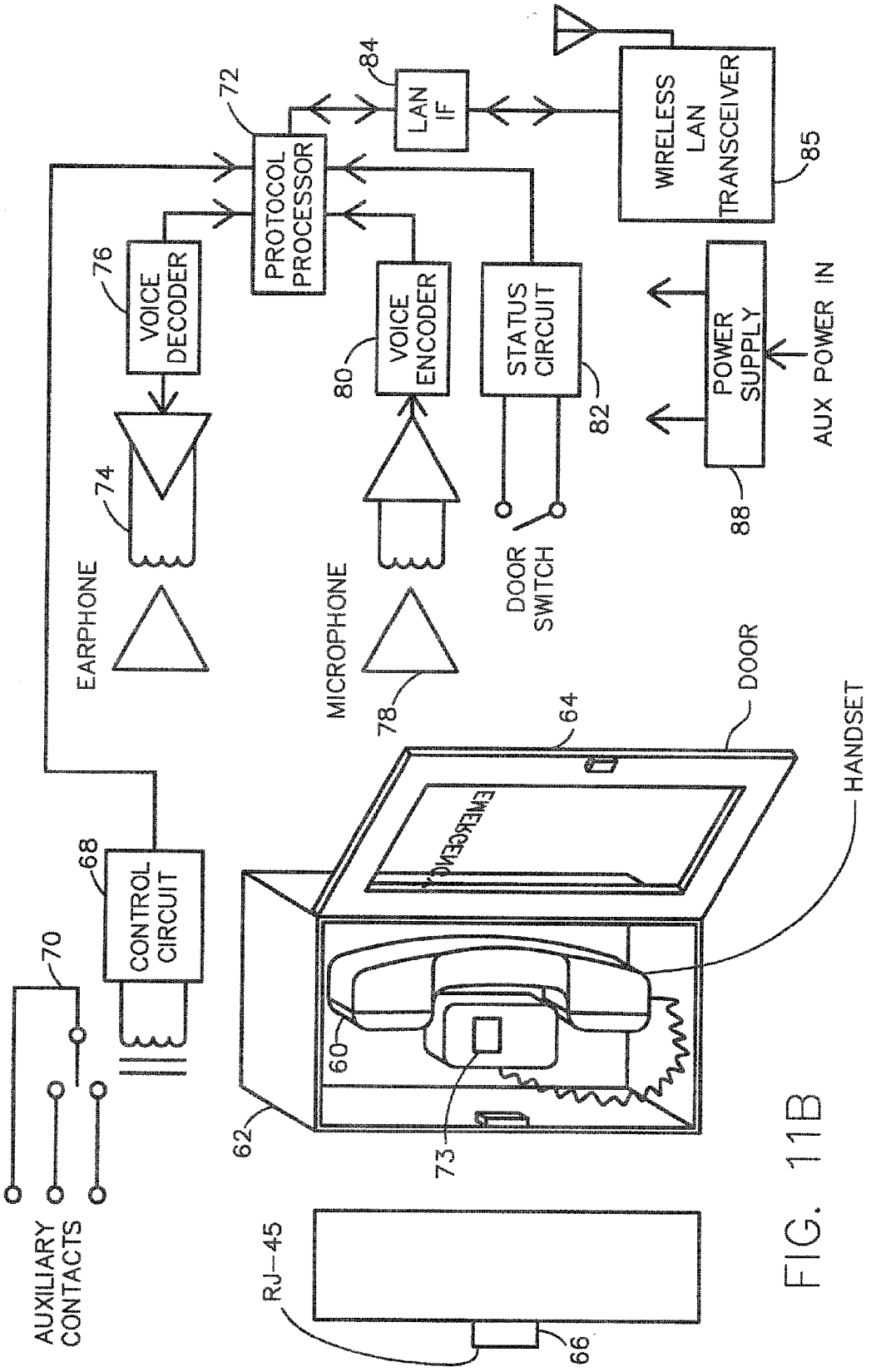
AUXILIARY CONTACTS
70
CONTROL CIRCUIT
68
EARPHONE
74
VOICE DECODER
76
MICROPHONE
78
VOICE ENCODER
80
STATUS CIRCUIT
82
DOOR SWITCH
PROTOCOL PROCESSOR
72
LAN IF
84
WIRELESS LAN TRANSCEIVER
85
POWER SUPPLY
88
AUX POWER IN
RJ-45
66
62
60
73
64
DOOR
HANDSET
EMERGENCY

FIG. 11B

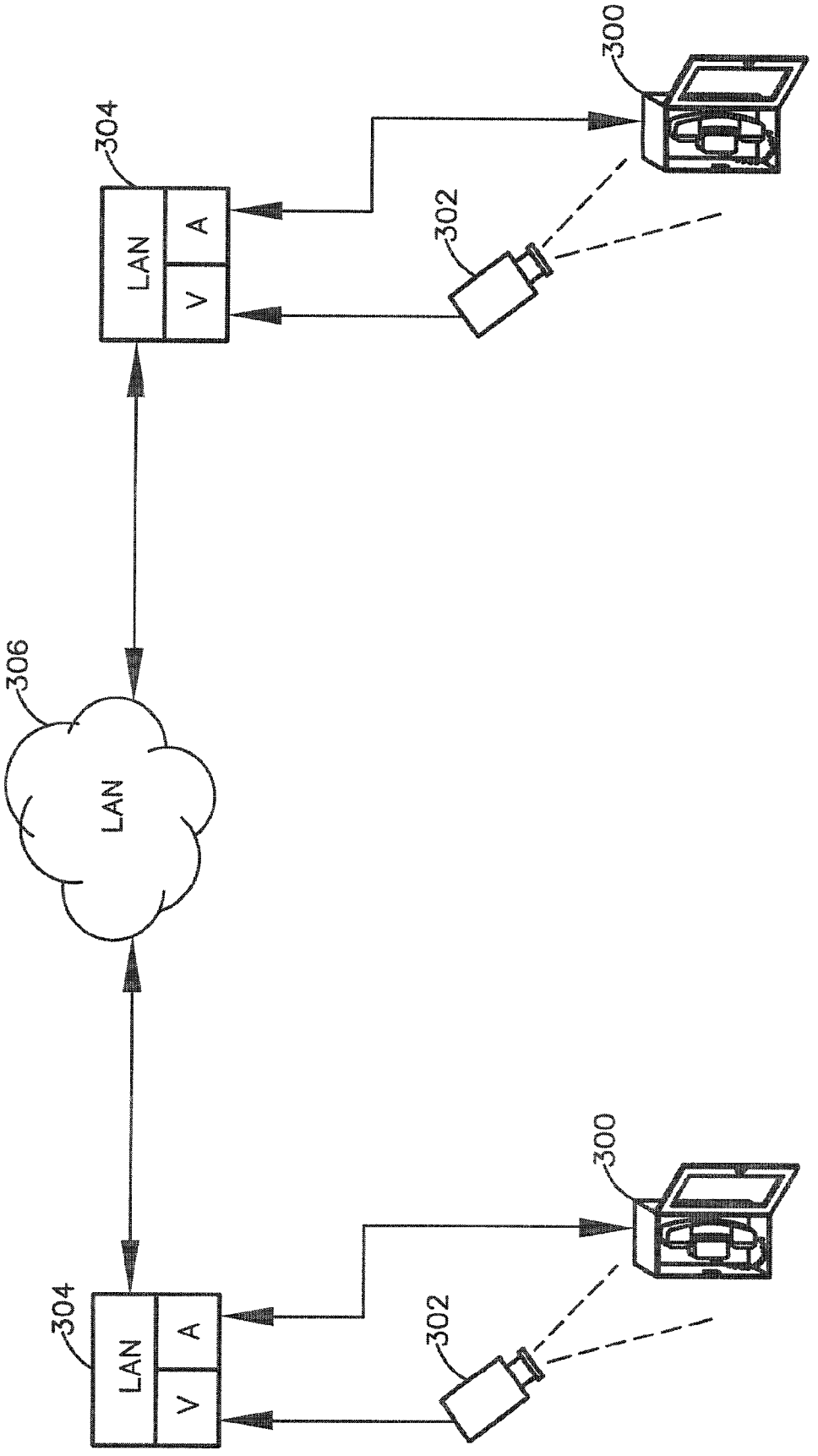

FIG. 12A

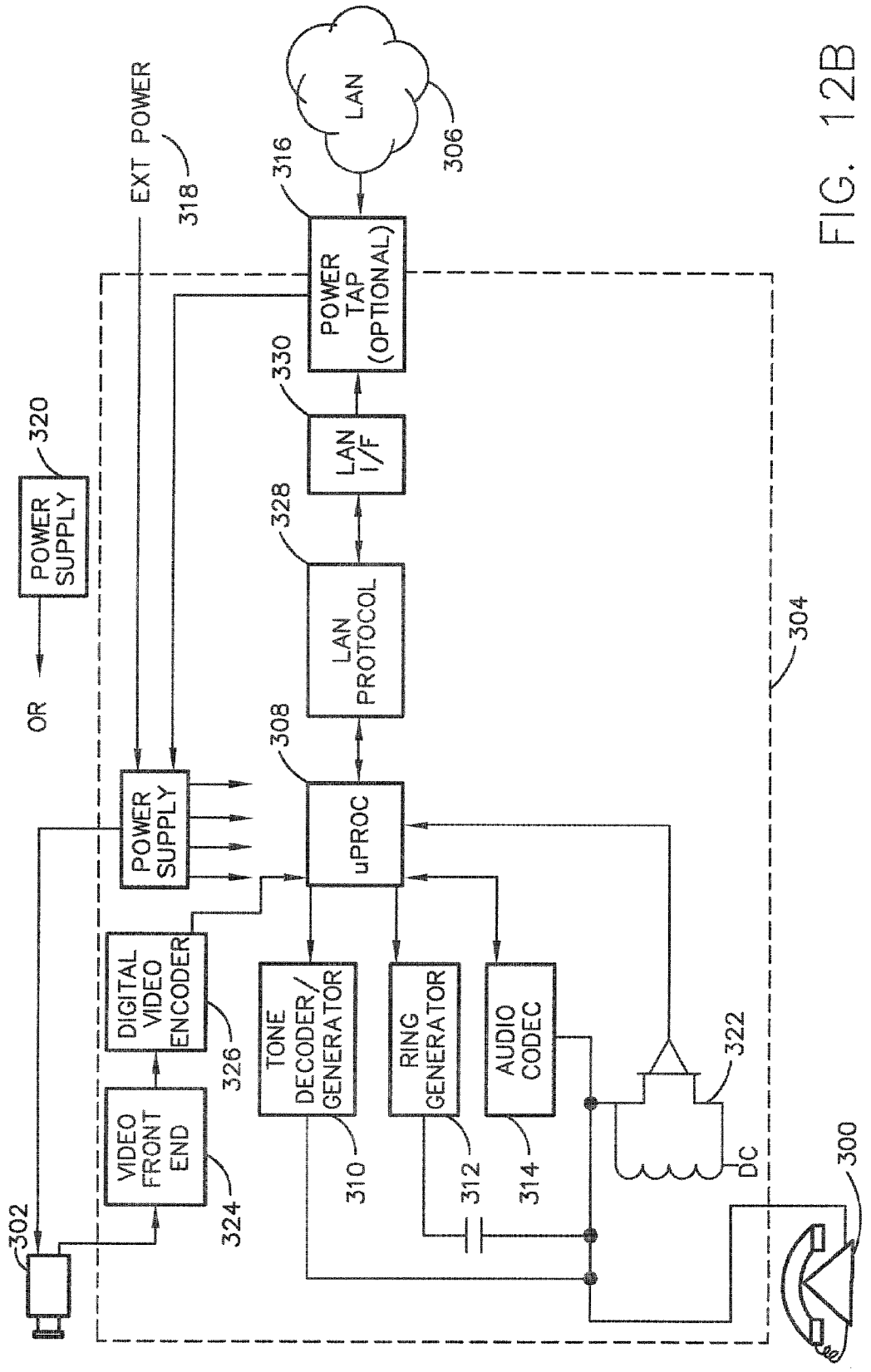
LAN
306
EXT POWER
318
316
POWER TAP (OPTIONAL)
330
LAN I/F
328
LAN PROTOCOL
308
uPROC
POWER SUPPLY
320
OR
304
DIGITAL VIDEO ENCODER
326
TONE DECODER/ GENERATOR
310
RING GENERATOR
312
AUDIO CODEC
314
VIDEO FRONT END
324
302
322
DC
300

FIG. 12B

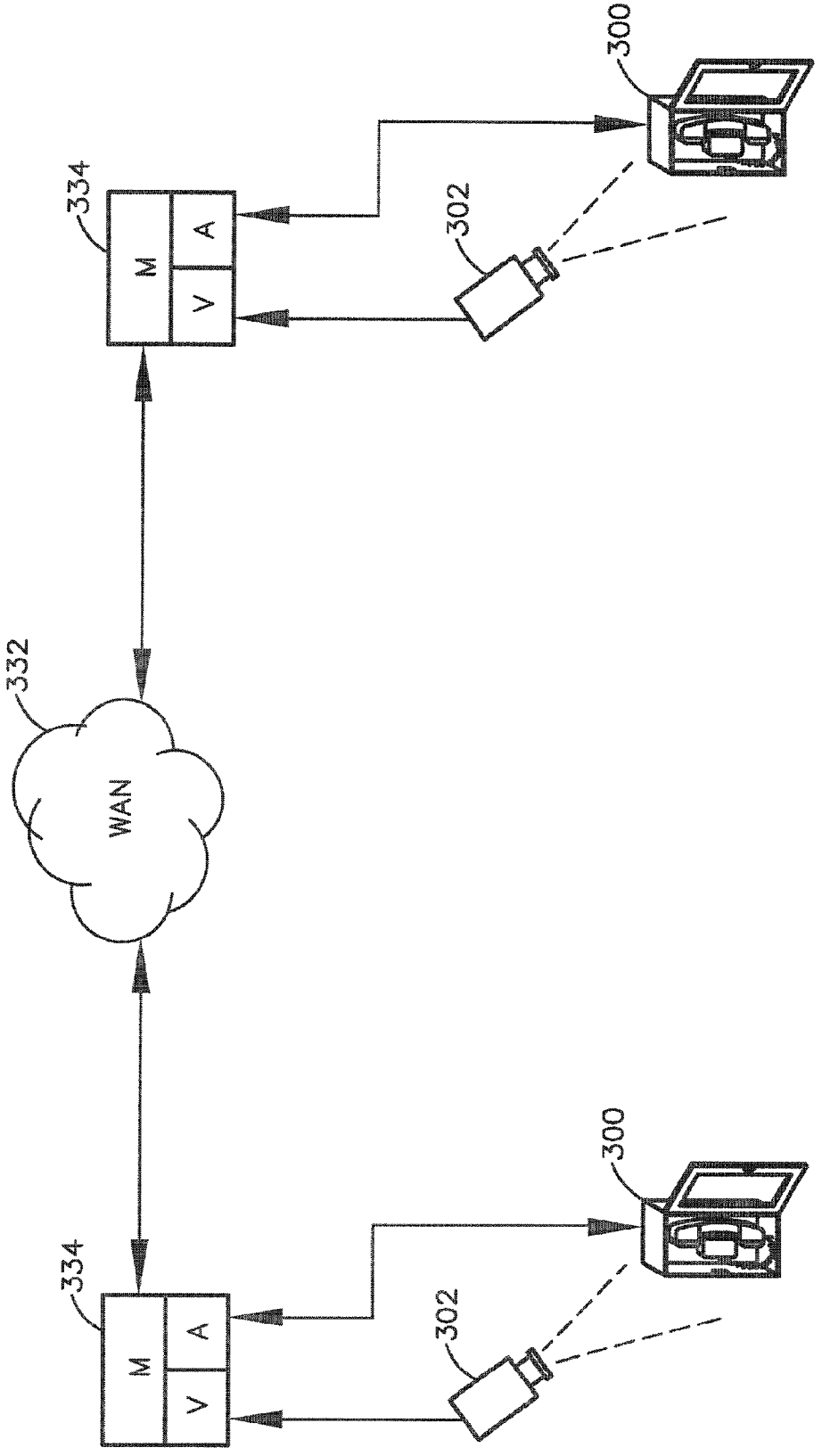

FIG. 13A

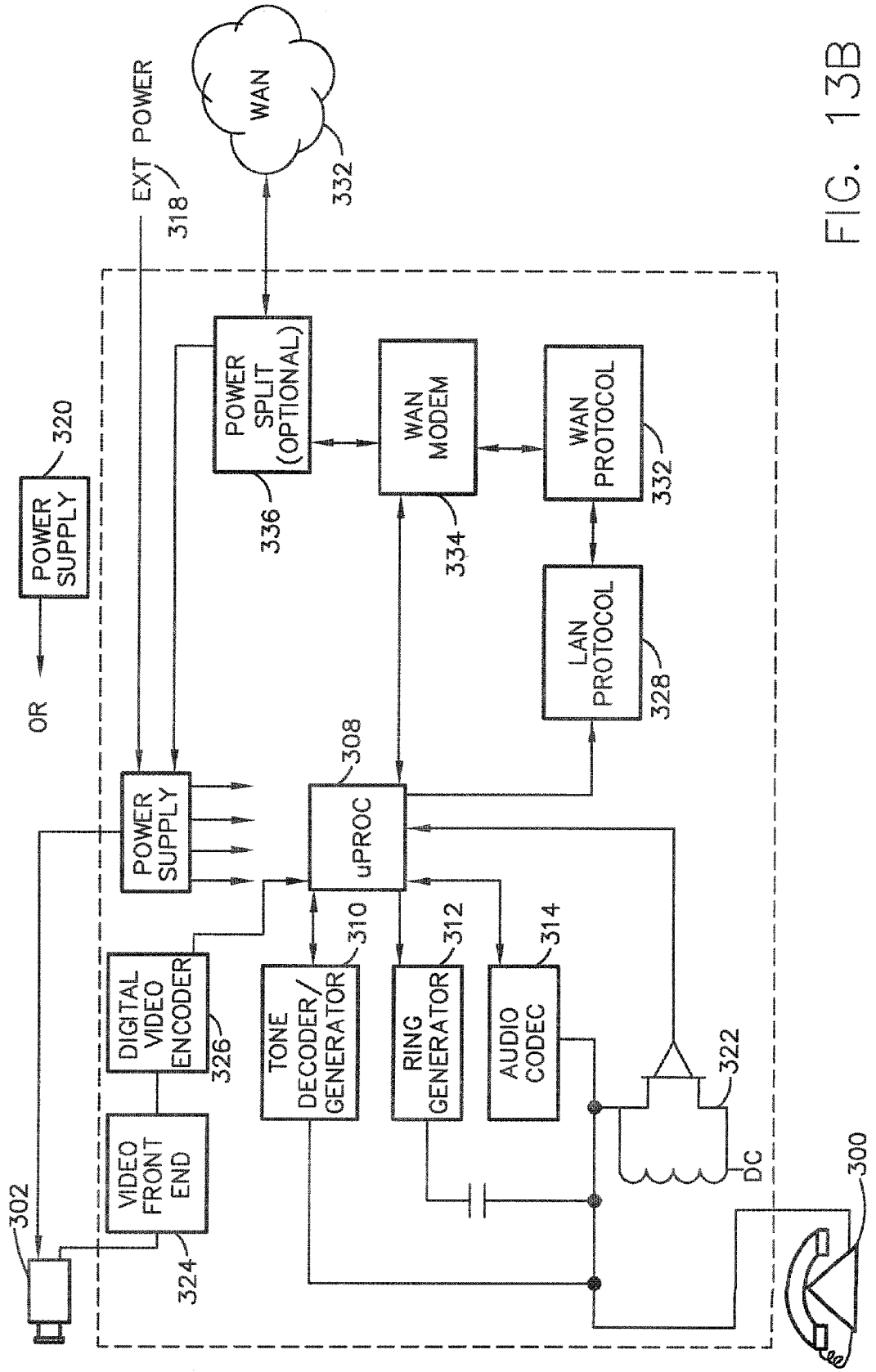
WAN
332
EXT POWER
318
POWER SUPPLY
320
OR
POWER SPLIT (OPTIONAL)
336
WAN MODEM
334
WAN PROTOCOL
332
LAN PROTOCOL
328
POWER SUPPLY
uPROC
308
DIGITAL VIDEO ENCODER
326
TONE DECODER/ GENERATOR
310
RING GENERATOR
312
AUDIO CODEC
314
VIDEO FRONT END
324
302
322
DC
300

FIG. 13B

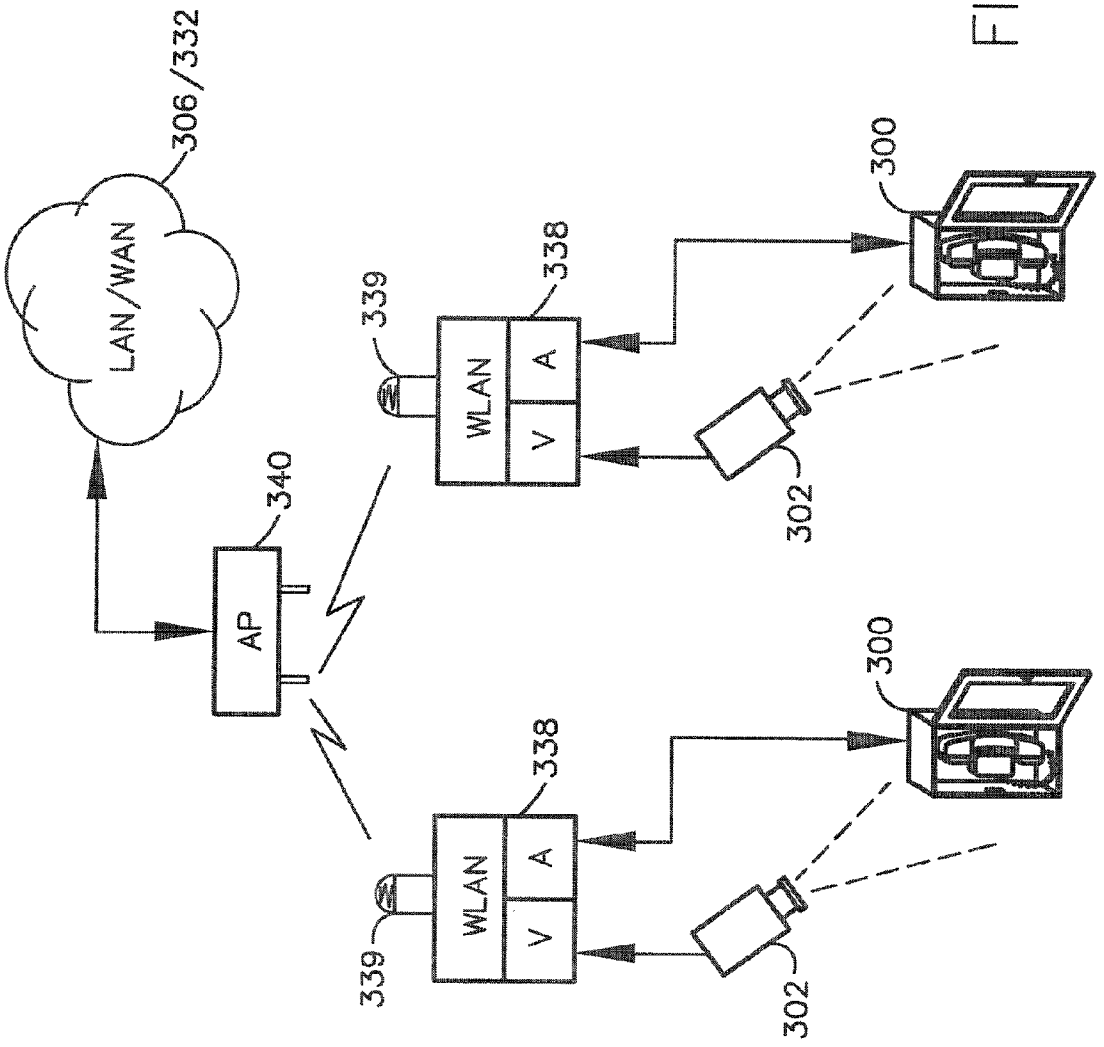

FIG. 14A

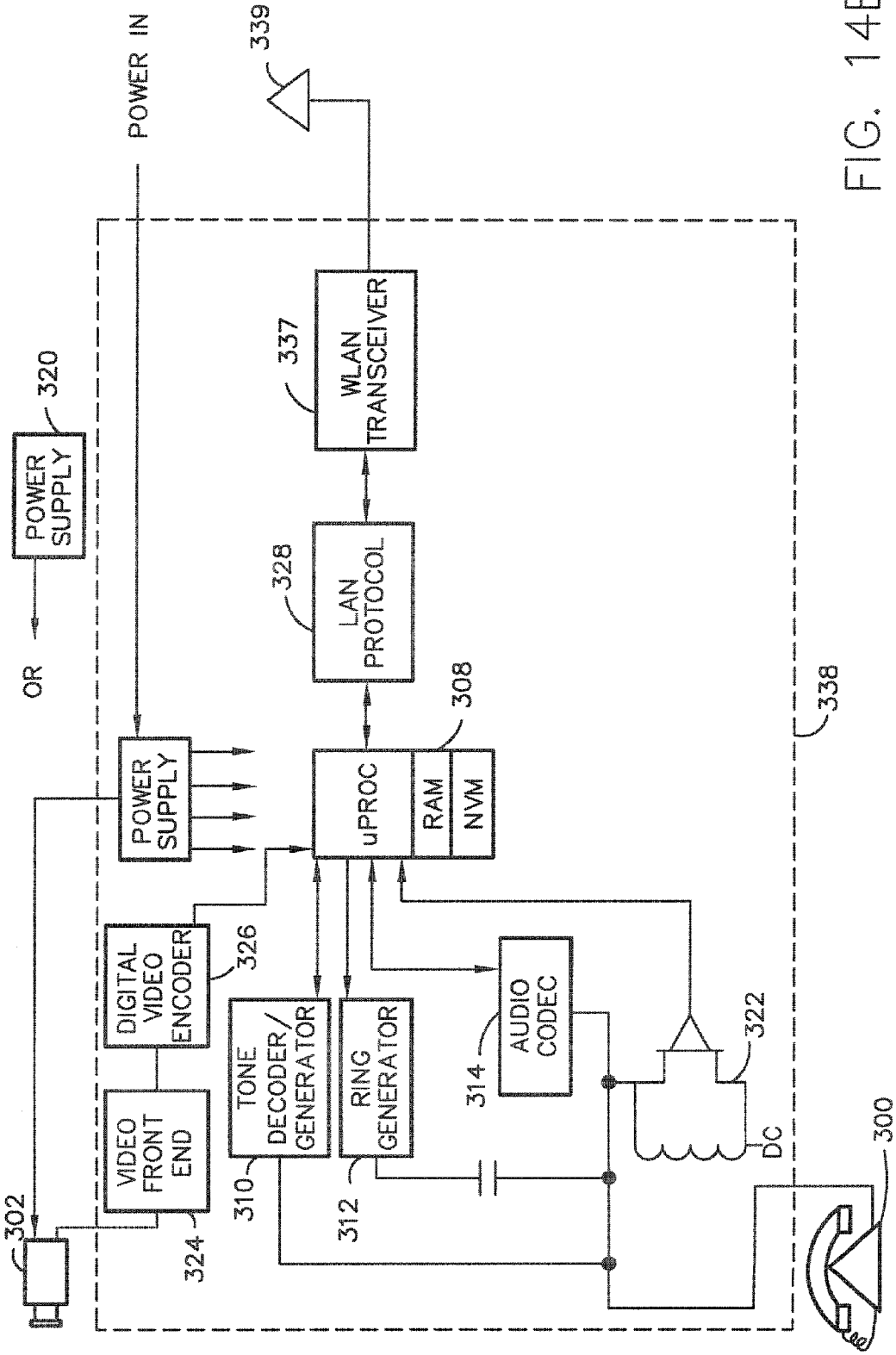
POWER IN
339
337
WLAN TRANSCEIVER
320
POWER SUPPLY
OR
328
LAN PROTOCOL
308
338
POWER SUPPLY
uPROC
RAM
NVM
DIGITAL VIDEO ENCODER
326
TONE DECODER/ GENERATOR
RING GENERATOR
AUDIO CODEC
314
322
VIDEO FRONT END
324
310
312
DC
302
300

FIG. 14B

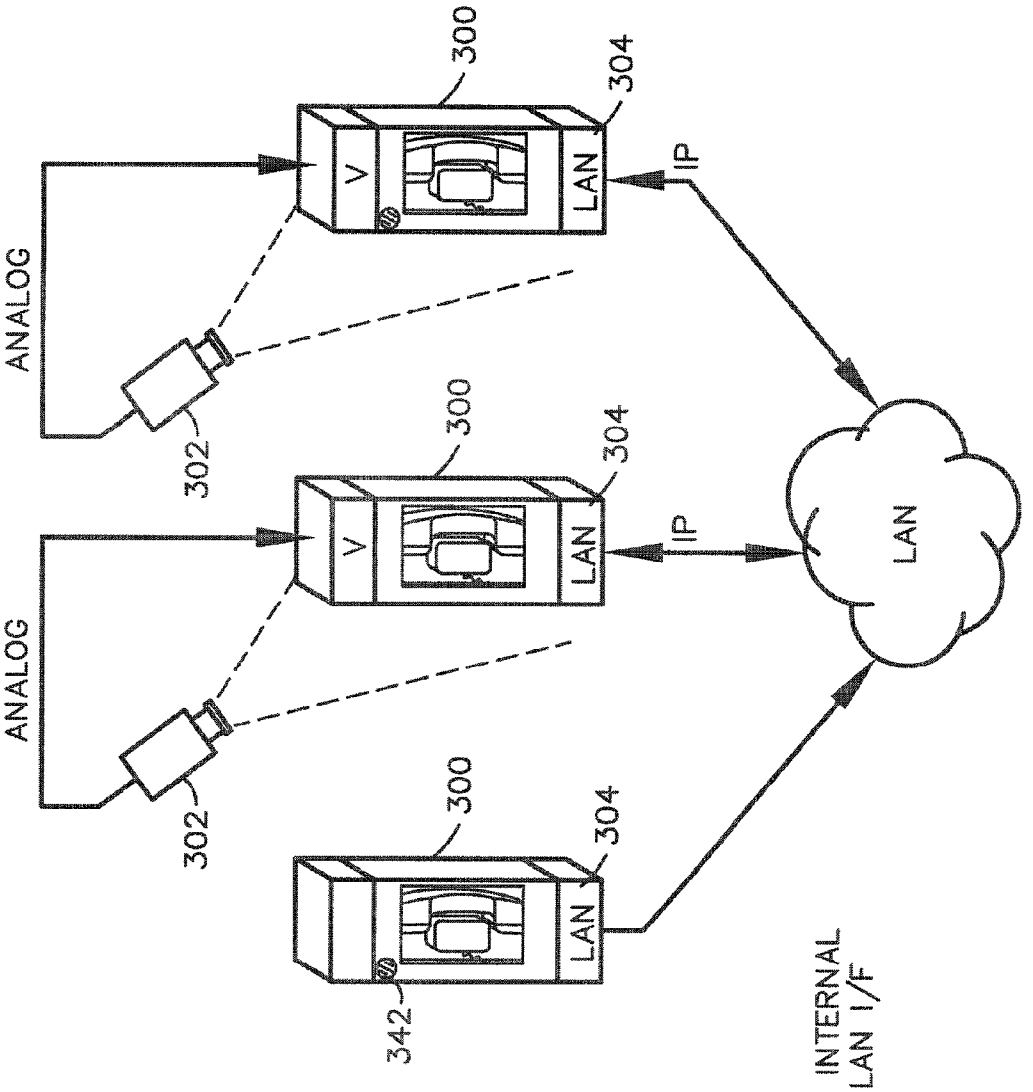

EMERGENCY TELEPHONE WITH INTERNAL ANALOG CAMERA I/F AND LAN I/F

FIG. 15A

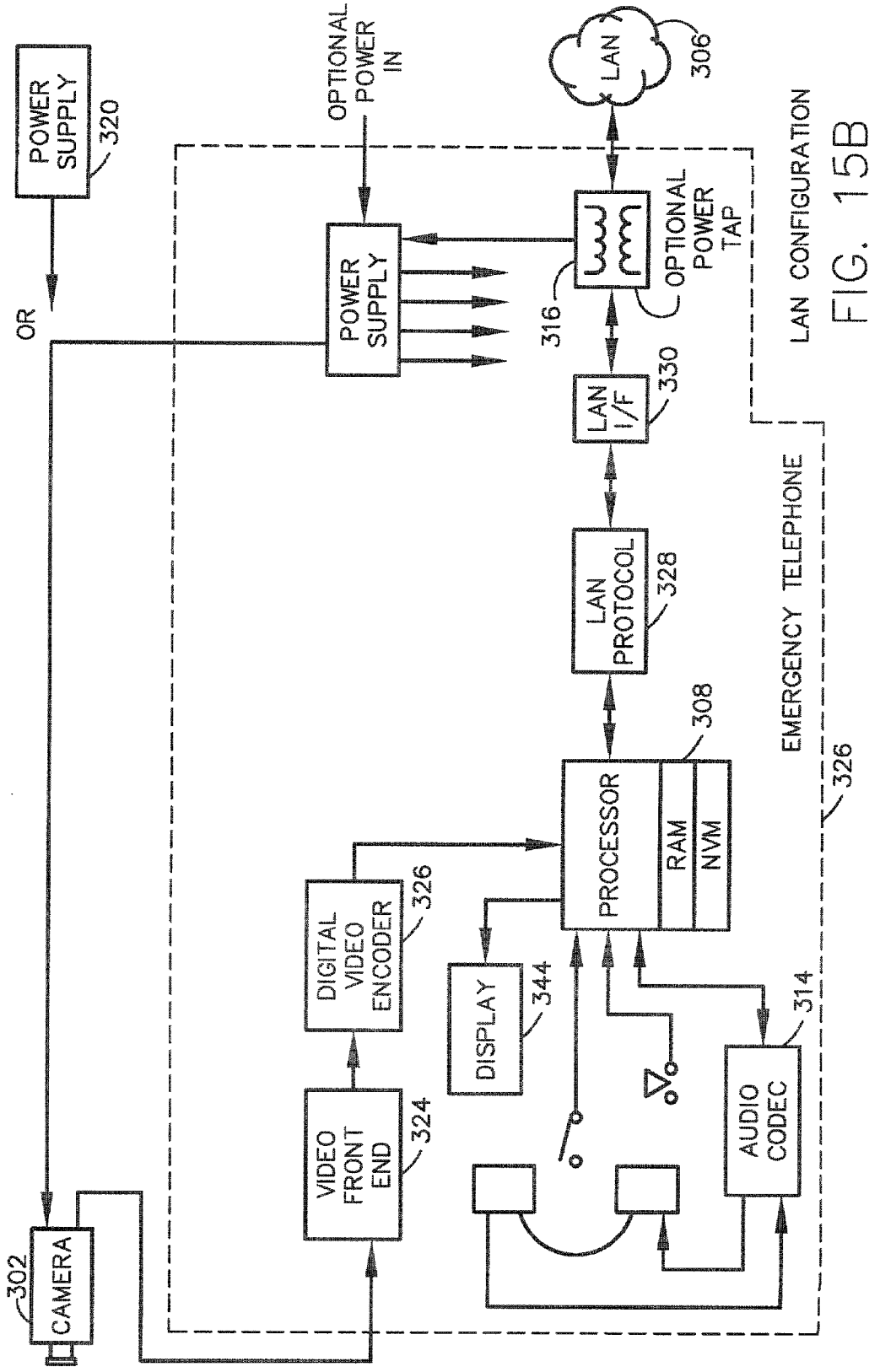
POWER SUPPLY
320
OR
OPTIONAL POWER IN
POWER SUPPLY
LAN
306
OPTIONAL POWER TAP
316
LAN I/F
330
LAN PROTOCOL
328
308
PROCESSOR
RAM
NVM
EMERGENCY TELEPHONE
326
LAN CONFIGURATION
DIGITAL VIDEO ENCODER
326
DISPLAY
344
AUDIO CODEC
314
VIDEO FRONT END
324
302
CAMERA

FIG. 15B

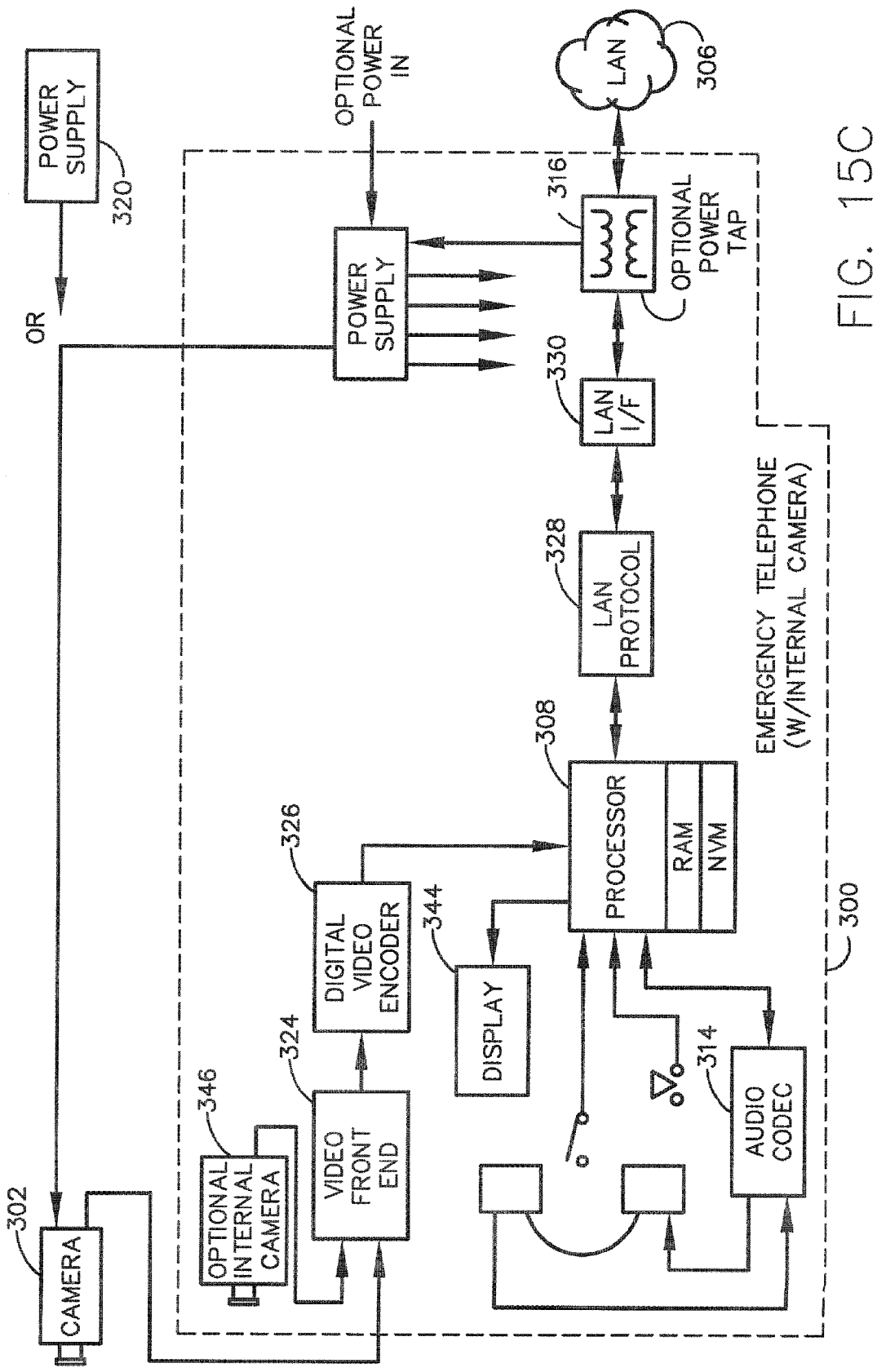
POWER SUPPLY
320
OR
OPTIONAL POWER IN
LAN
306
316
OPTIONAL POWER TAP
POWER SUPPLY
330
LAN I/F
328
LAN PROTOCOL
308
PROCESSOR
RAM
NVM
EMERGENCY TELEPHONE (W/INTERNAL CAMERA)
300
326
DIGITAL VIDEO ENCODER
344
DISPLAY
324
VIDEO FRONT END
346
OPTIONAL INTERNAL CAMERA
314
AUDIO CODEC
302
CAMERA

FIG. 15C

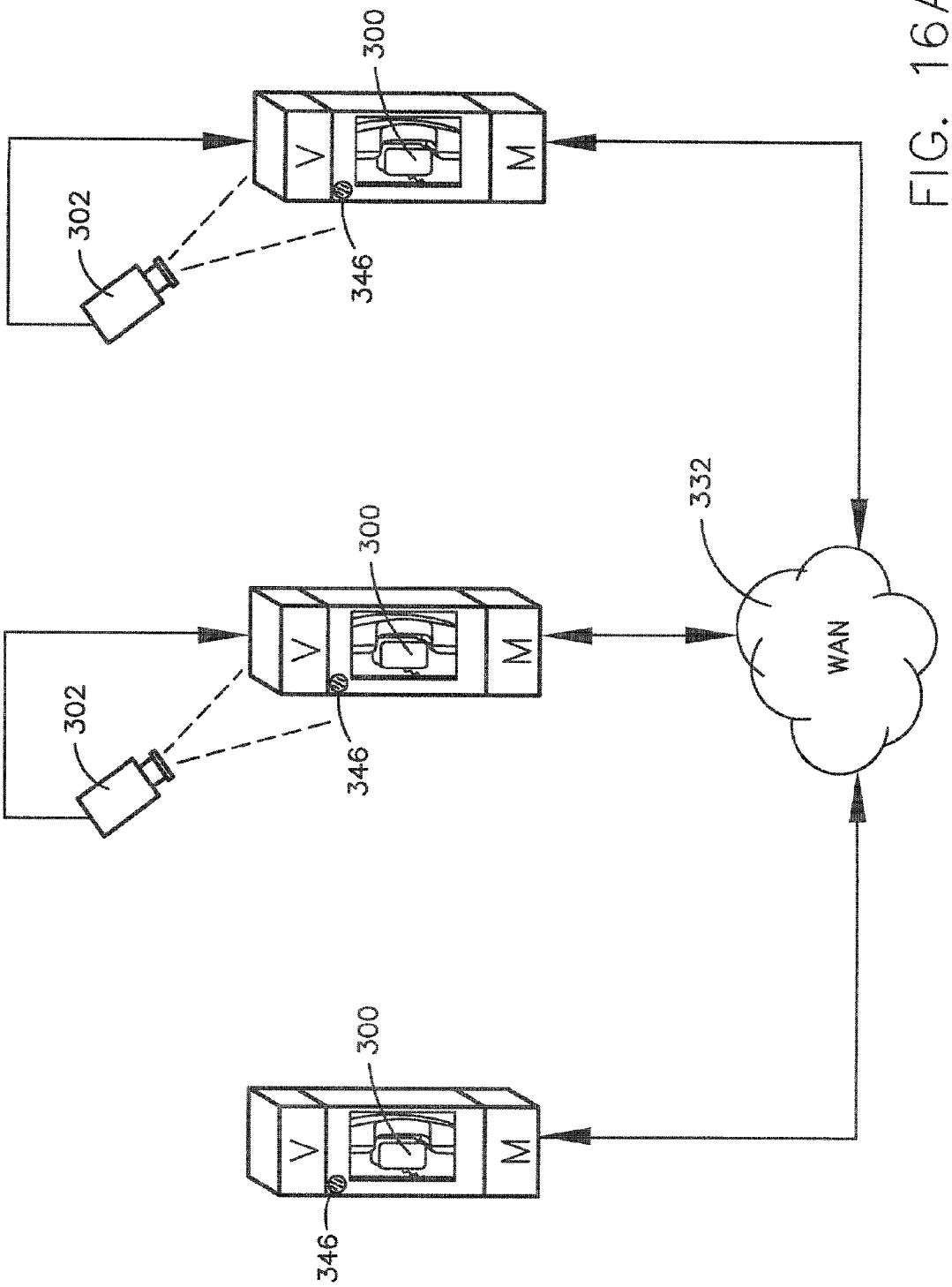

FIG. 16A

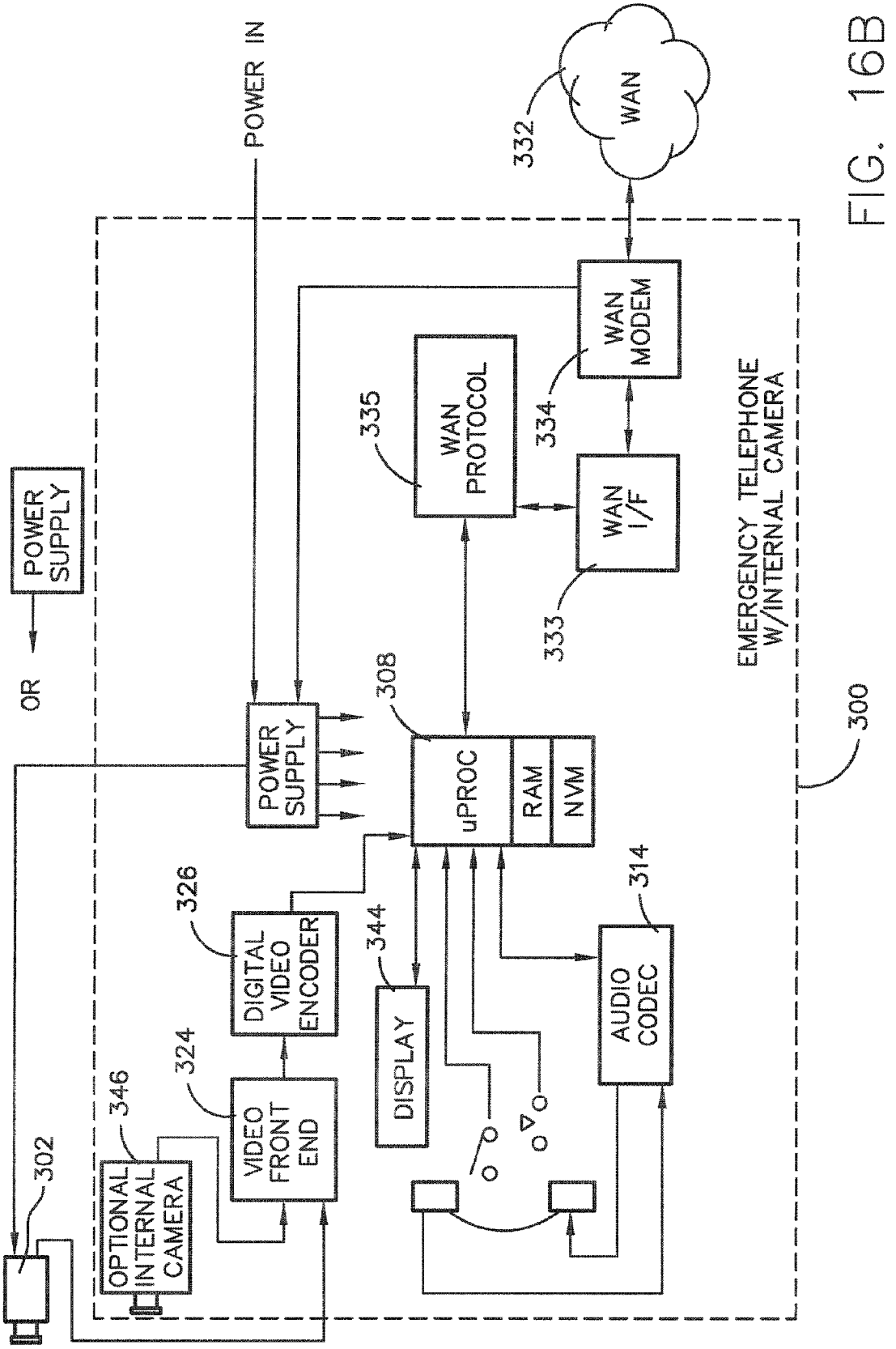
POWER IN
332
WAN
WAN MODEM
334
335
WAN PROTOCOL
WAN I/F
333
POWER SUPPLY
OR
308
POWER SUPPLY
uPROC
RAM
NVM
EMERGENCY TELEPHONE W/INTERNAL CAMERA
300
326
DIGITAL VIDEO ENCODER
344
DISPLAY
314
AUDIO CODEC
324
VIDEO FRONT END
346
OPTIONAL INTERNAL CAMERA
302

FIG. 16B

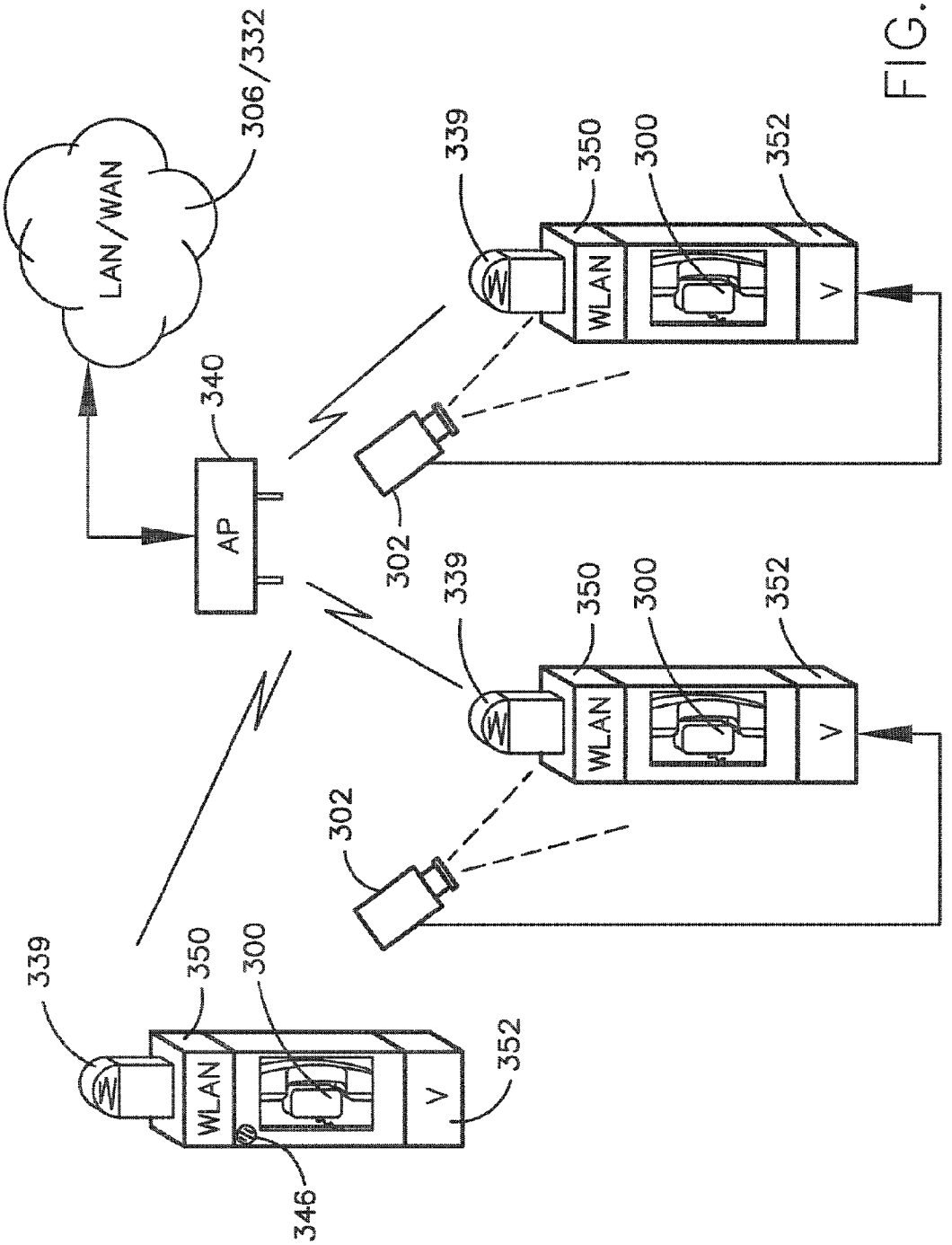

FIG. 17A

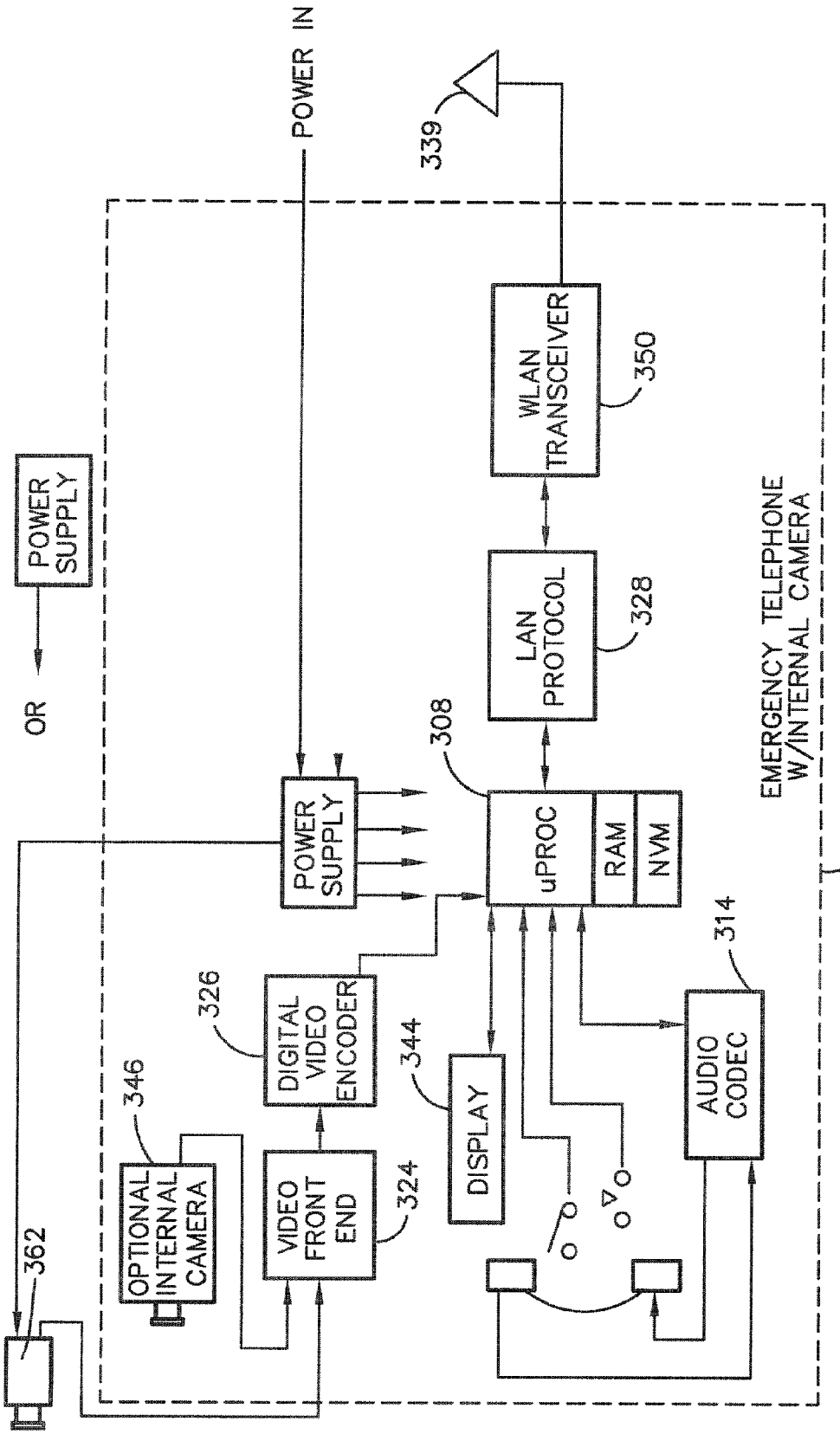
POWER IN
339
WLAN TRANSCEIVER
350
POWER SUPPLY
OR
LAN PROTOCOL
328
308
EMERGENCY TELEPHONE W/INTERNAL CAMERA
300
POWER SUPPLY
uPROC
RAM
NVM
314
326
DIGITAL VIDEO ENCODER
344
346
DISPLAY
AUDIO CODEC
OPTIONAL INTERNAL CAMERA
VIDEO FRONT END
324
362

FIG. 17B

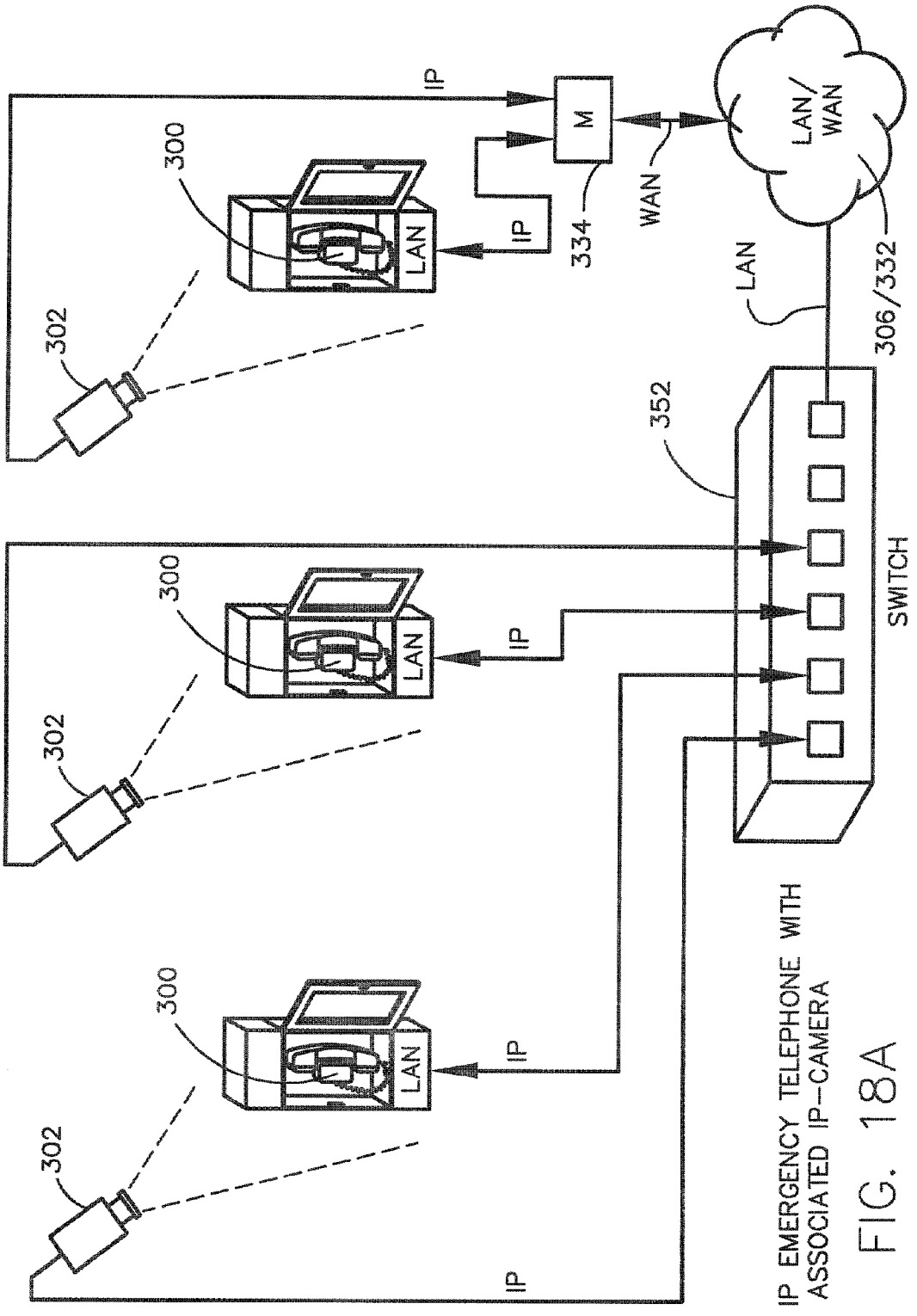

BASIC IP EMERGENCY TELEPHONE WITH ASSOCIATED IP-CAMERA

FIG. 18A

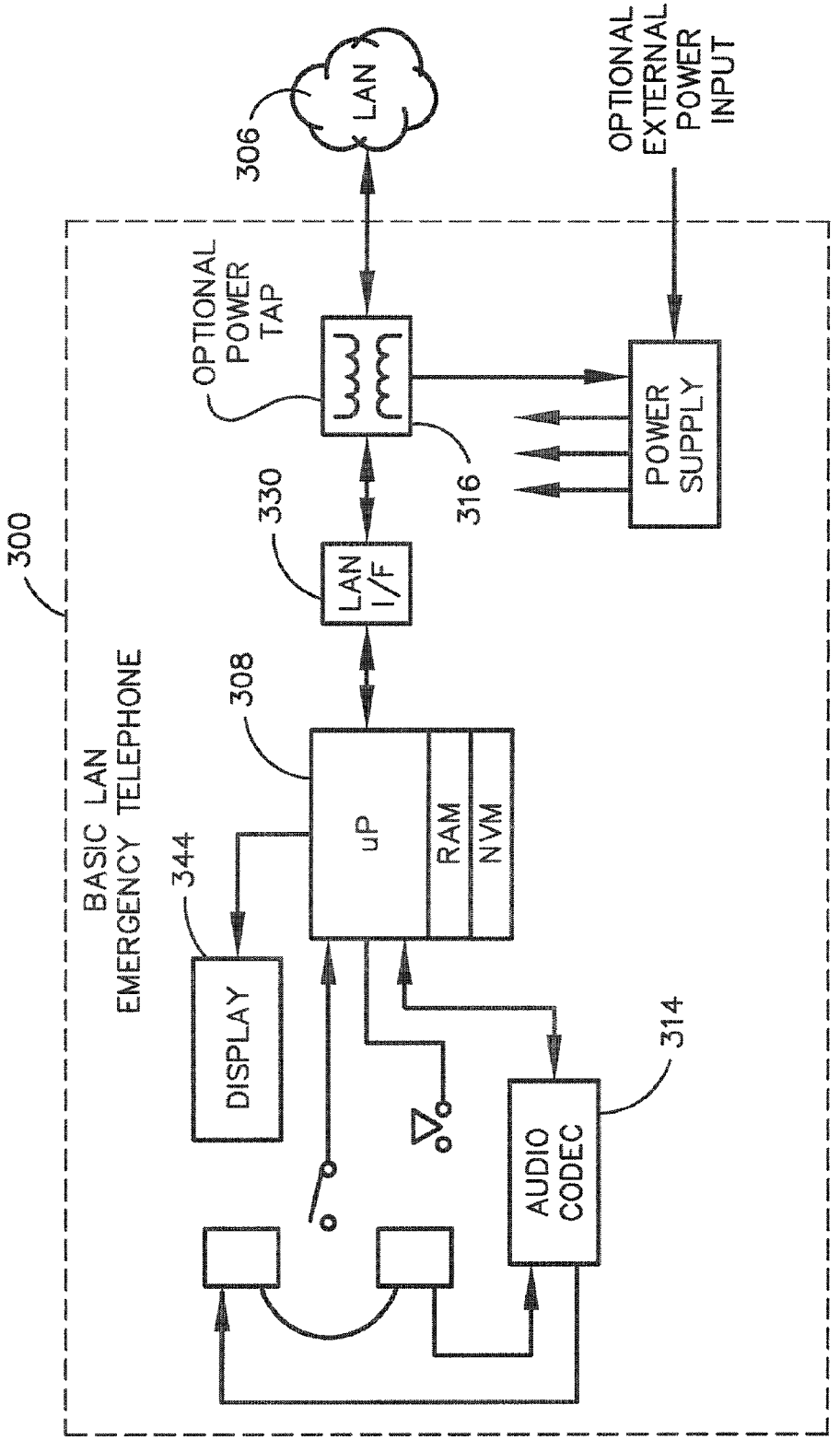

FIG. 18B

LAN INTERFACE CONFIGURATION

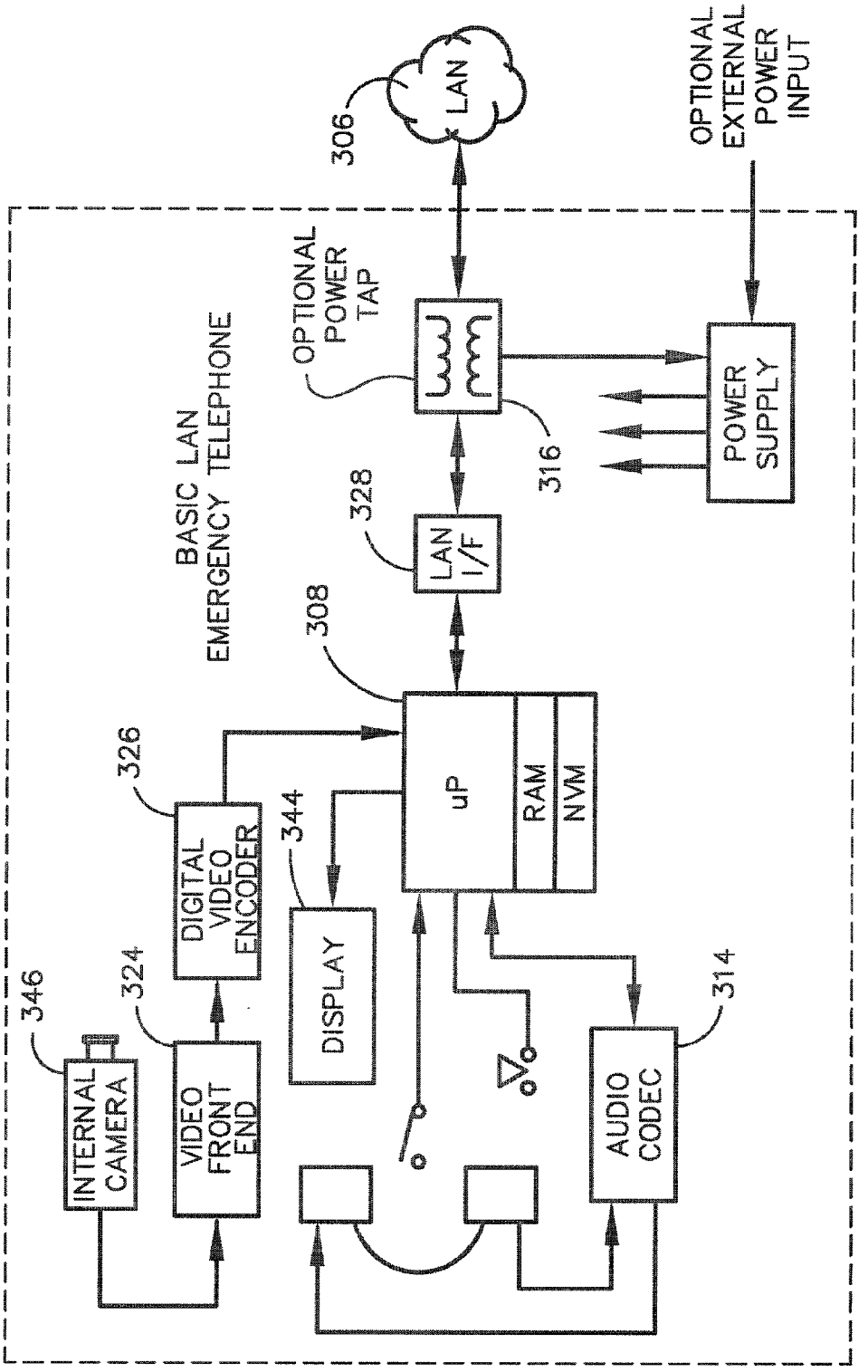
LAN INTERFACE CONFIGURATION
W/INTERNAL CAMERA
BASIC LAN
EMERGENCY TELEPHONE
306
LAN
OPTIONAL
EXTERNAL
POWER
INPUT
OPTIONAL
POWER
TAP
316
POWER
SUPPLY
328
LAN
I/F
308
uP
RAM
NVM
326
DIGITAL
VIDEO
ENCODER
344
DISPLAY
324
VIDEO
FRONT
END
346
INTERNAL
CAMERA
314
AUDIO
CODEC

FIG. 18C

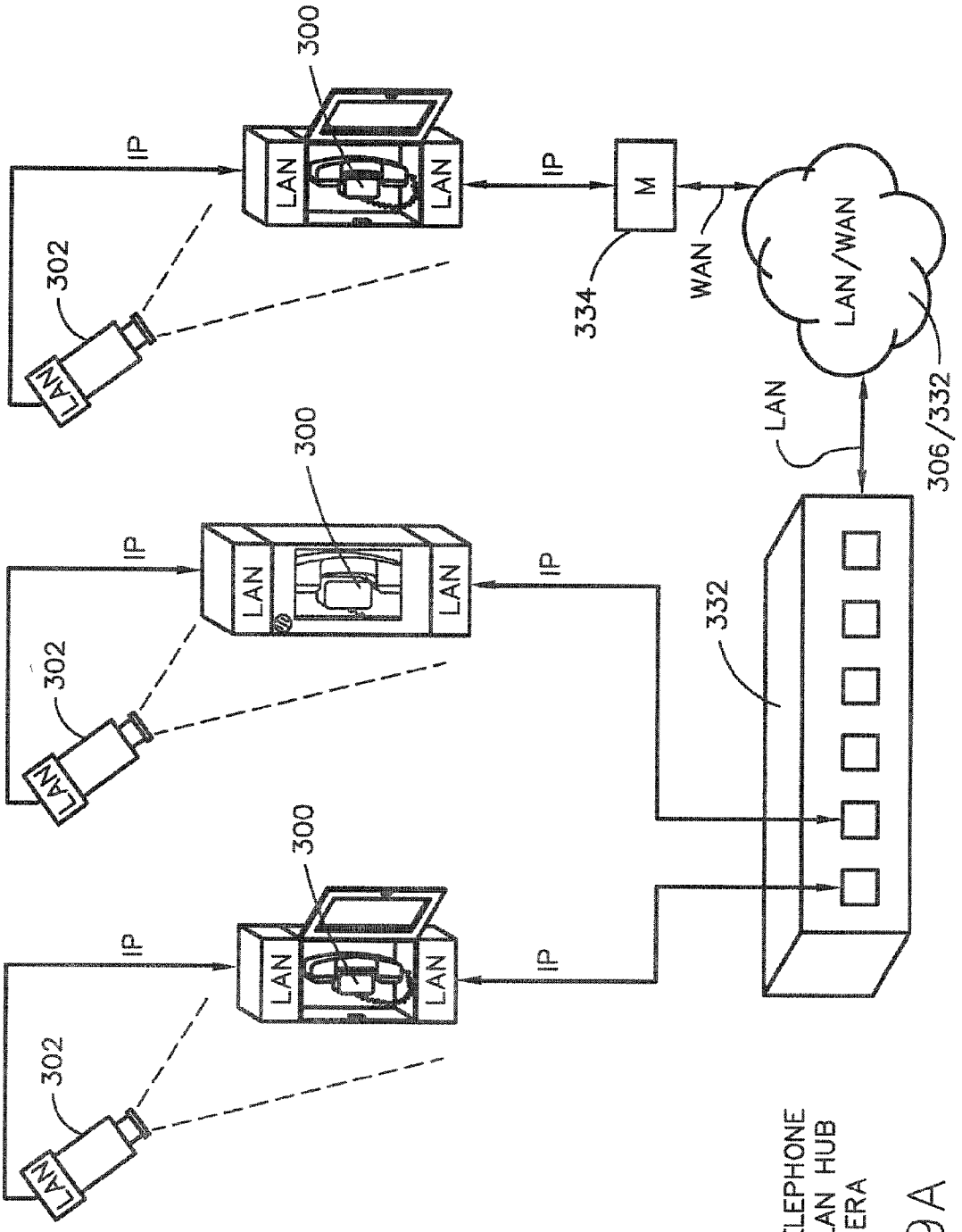

IP EMERGENCY TELEPHONE WITH INTERNAL LAN HUB AND IP-CAMERA

FIG. 19A

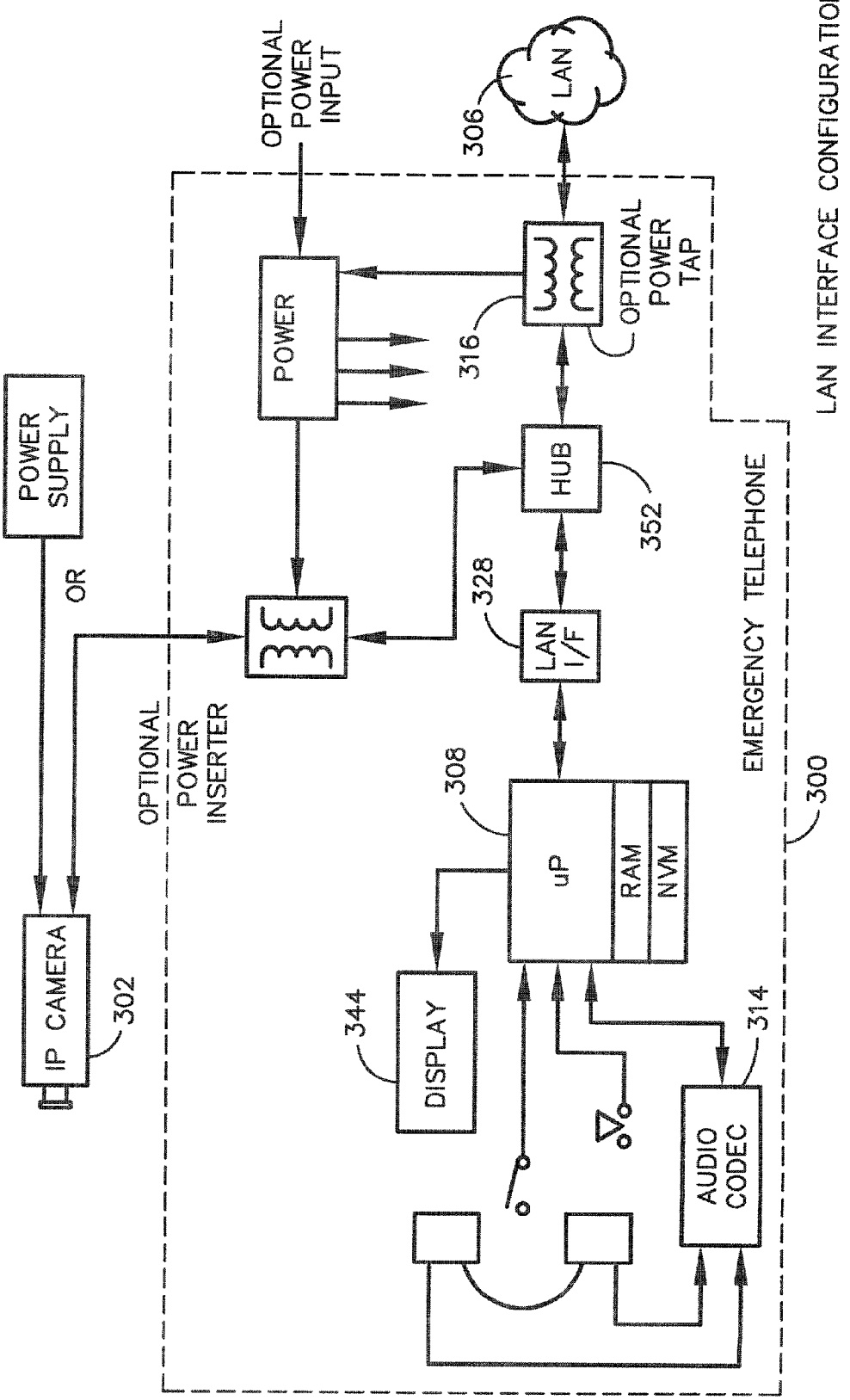
LAN INTERFACE CONFIGURATION
EMERGENCY TELEPHONE
300
OPTIONAL POWER INPUT
306
LAN
OPTIONAL POWER TAP
316
POWER
HUB
352
328
LAN I/F
POWER SUPPLY
OR
OPTIONAL POWER INSERTER
308
uP
RAM
NVM
IP CAMERA
302
344
DISPLAY
314
AUDIO CODEC

FIG. 19B

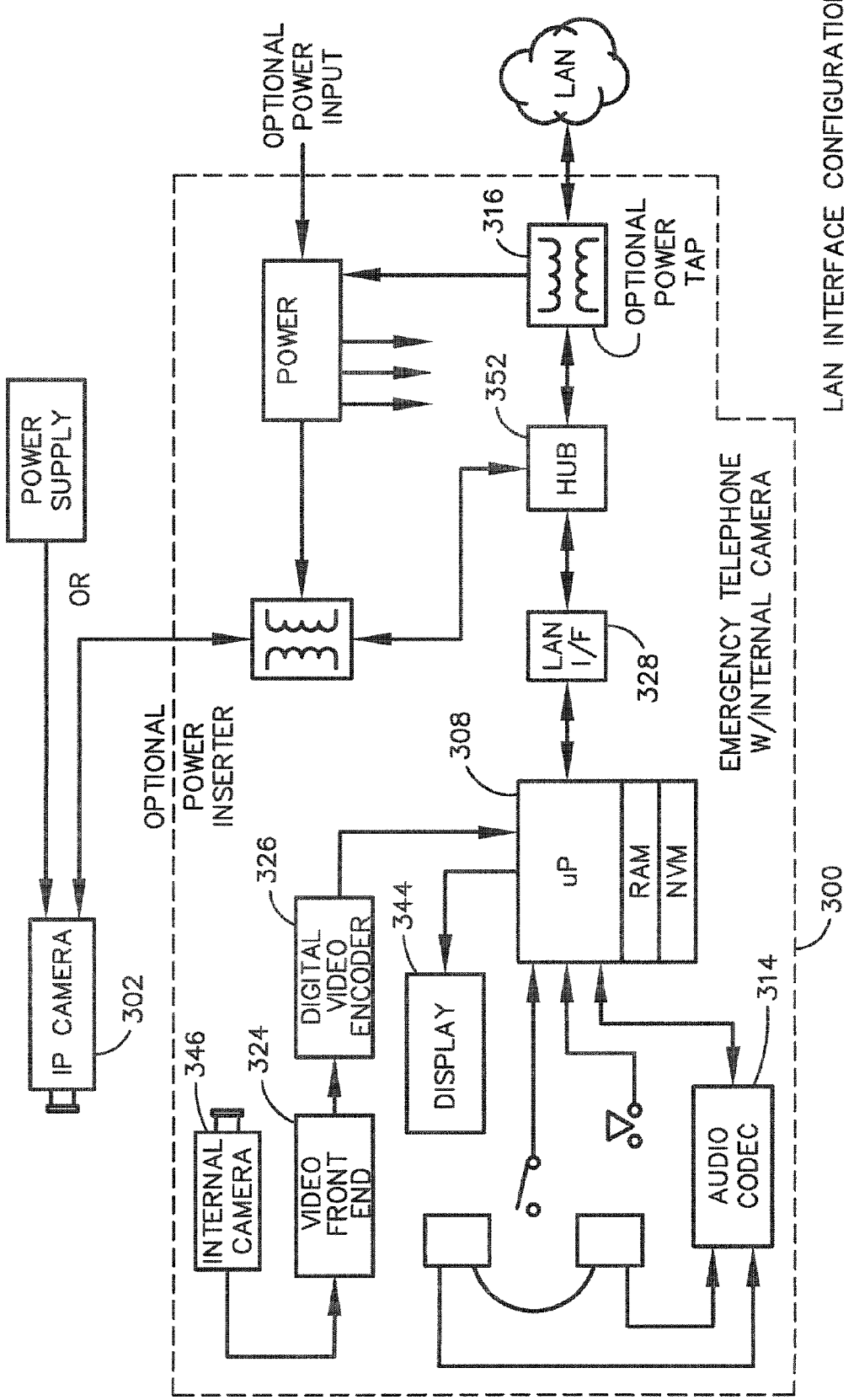
LAN INTERFACE CONFIGURATION
EMERGENCY TELEPHONE W/INTERNAL CAMERA
OPTIONAL POWER INSERTER
OPTIONAL POWER INPUT
LAN
316
OPTIONAL POWER TAP
POWER
352
HUB
LAN I/F
328
308
uP
RAM
NVM
300
POWER SUPPLY
OR
IP CAMERA
302
326
DIGITAL VIDEO ENCODER
344
DISPLAY
346
INTERNAL CAMERA
324
VIDEO FRONT END
314
AUDIO CODEC

FIG. 19C

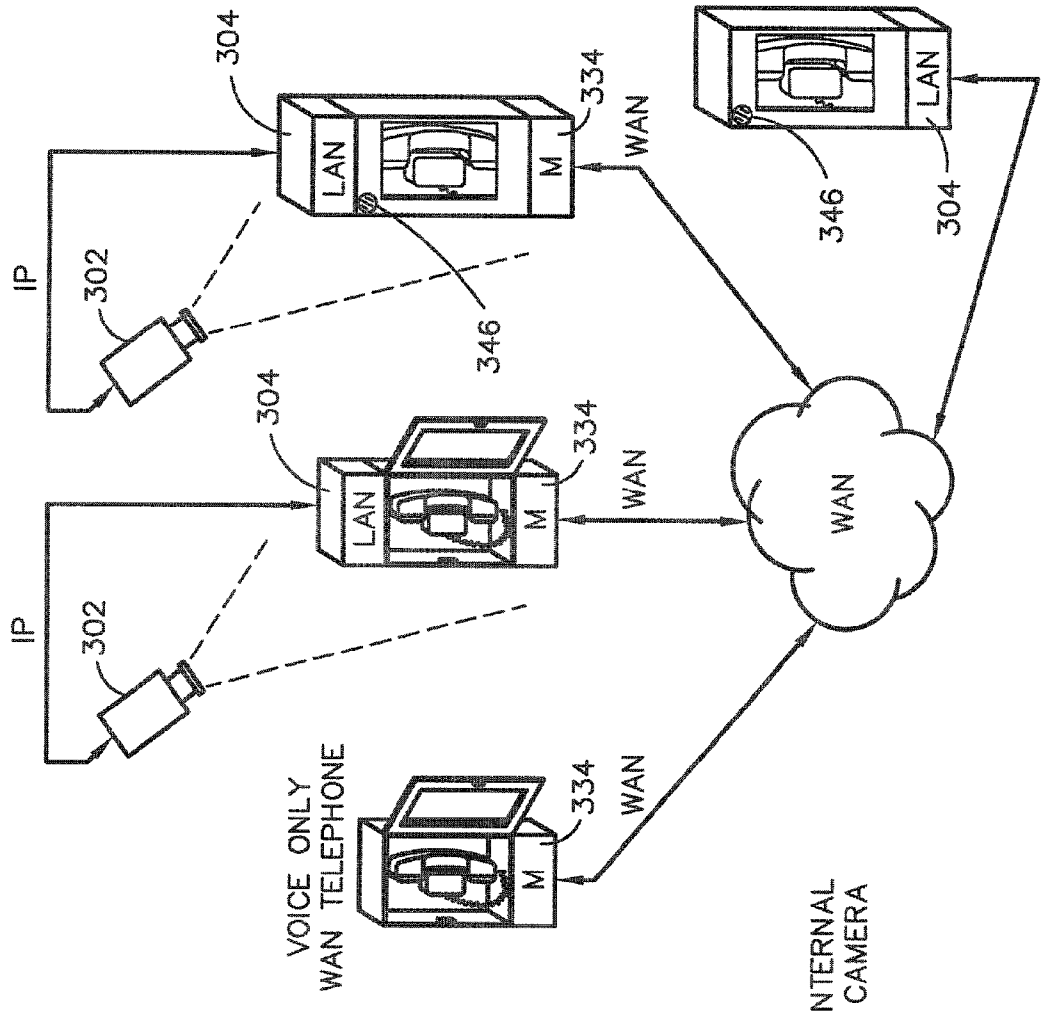

EMERGENCY TELEPHONE WITH INTERNAL
LAN MODEM AND HUB FOR IP CAMERA

FIG. 20A

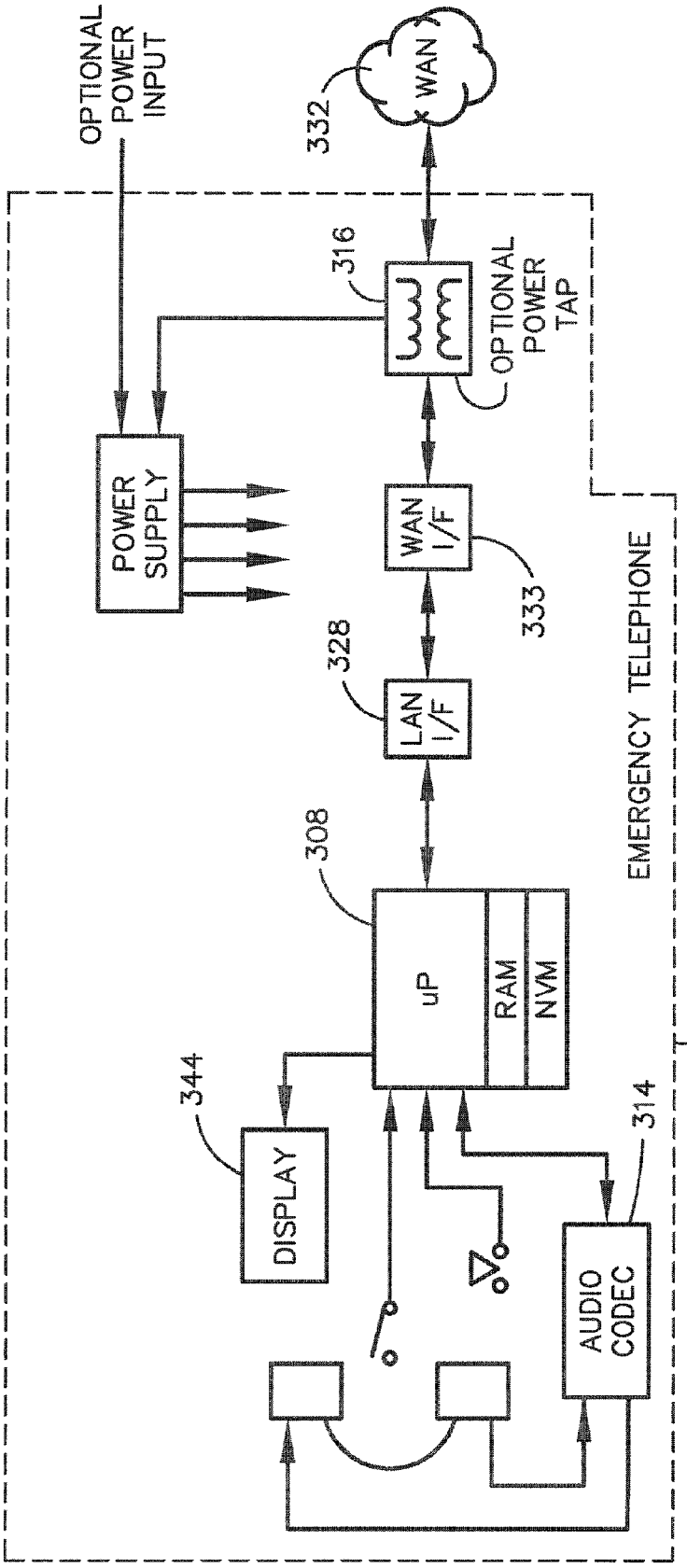

BASIC WAN VOIP CONFIGURATION

FIG. 20B

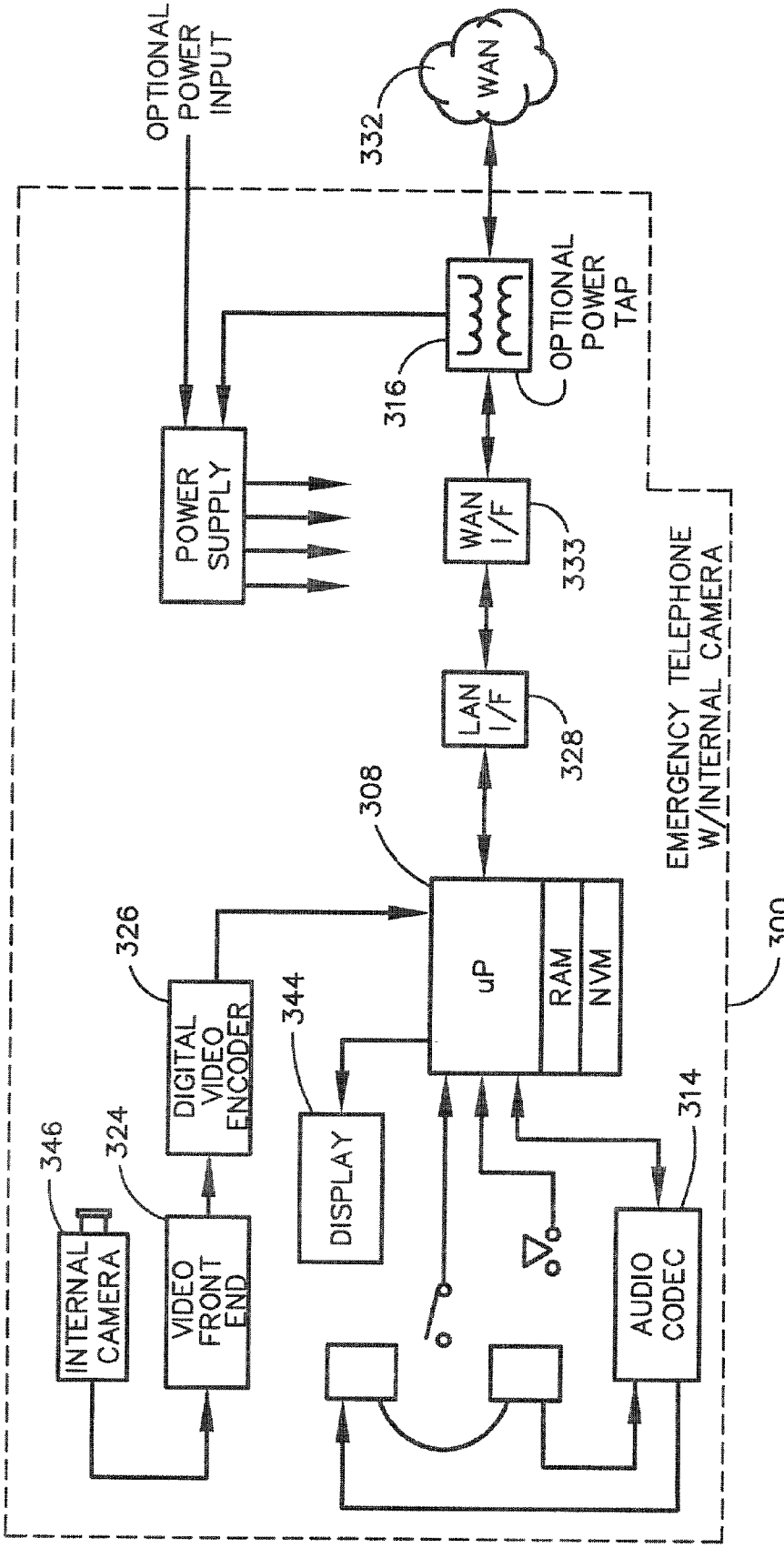

BASIC WAN
VOIP CONFIGURATION
FIG. 20C

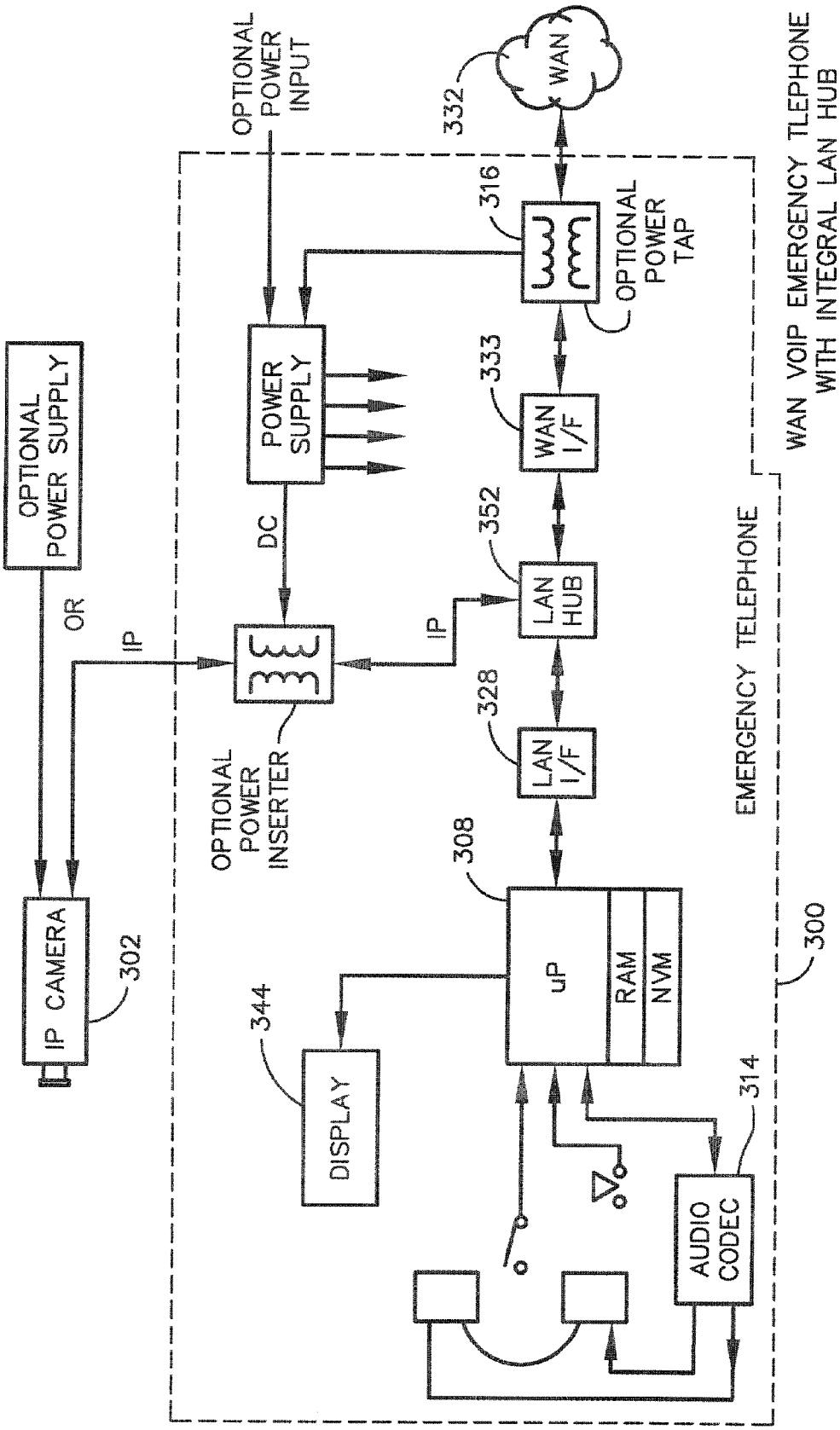
WAN VOIP EMERGENCY TLEPHONE
WITH INTEGRAL LAN HUB
EMERGENCY TELEPHONE
300
OPTIONAL
POWER
INPUT
WAN
332
316
OPTIONAL
POWER
TAP
OPTIONAL
POWER SUPPLY
POWER
SUPPLY
333
WAN
I/F
DC
352
LAN
HUB
OR
IP
IP
OPTIONAL
POWER
INSERTER
328
LAN
I/F
308
IP CAMERA
302
uP
RAM
NVM
344
DISPLAY
314
AUDIO
CODEC

FIG. 20D

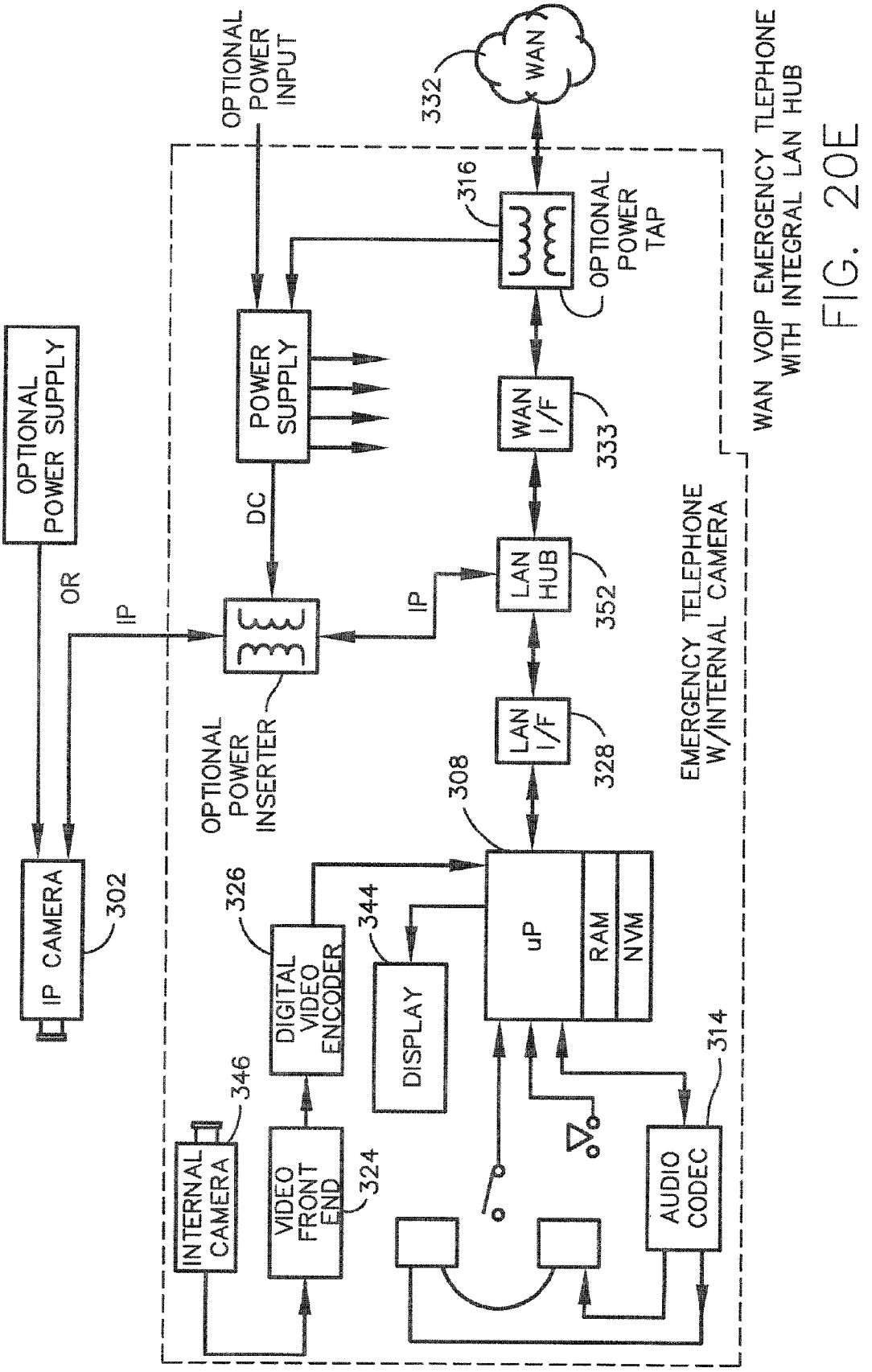
WAN VOIP EMERGENCY TLEPHONE
WITH INTEGRAL LAN HUB
EMERGENCY TELEPHONE
W/INTERNAL CAMERA
OPTIONAL
POWER
INPUT
WAN
332
316
OPTIONAL
POWER
TAP
OPTIONAL
POWER SUPPLY
POWER
SUPPLY
WAN
I/F
333
DC
OR
IP
IP
LAN
HUB
352
OPTIONAL
POWER
INSERTER
LAN
I/F
328
308
IP CAMERA
302
326
344
DIGITAL
VIDEO
ENCODER
DISPLAY
uP
RAM
NVM
346
INTERNAL
CAMERA
VIDEO
FRONT
END
324
AUDIO
CODEC
314

FIG. 20E

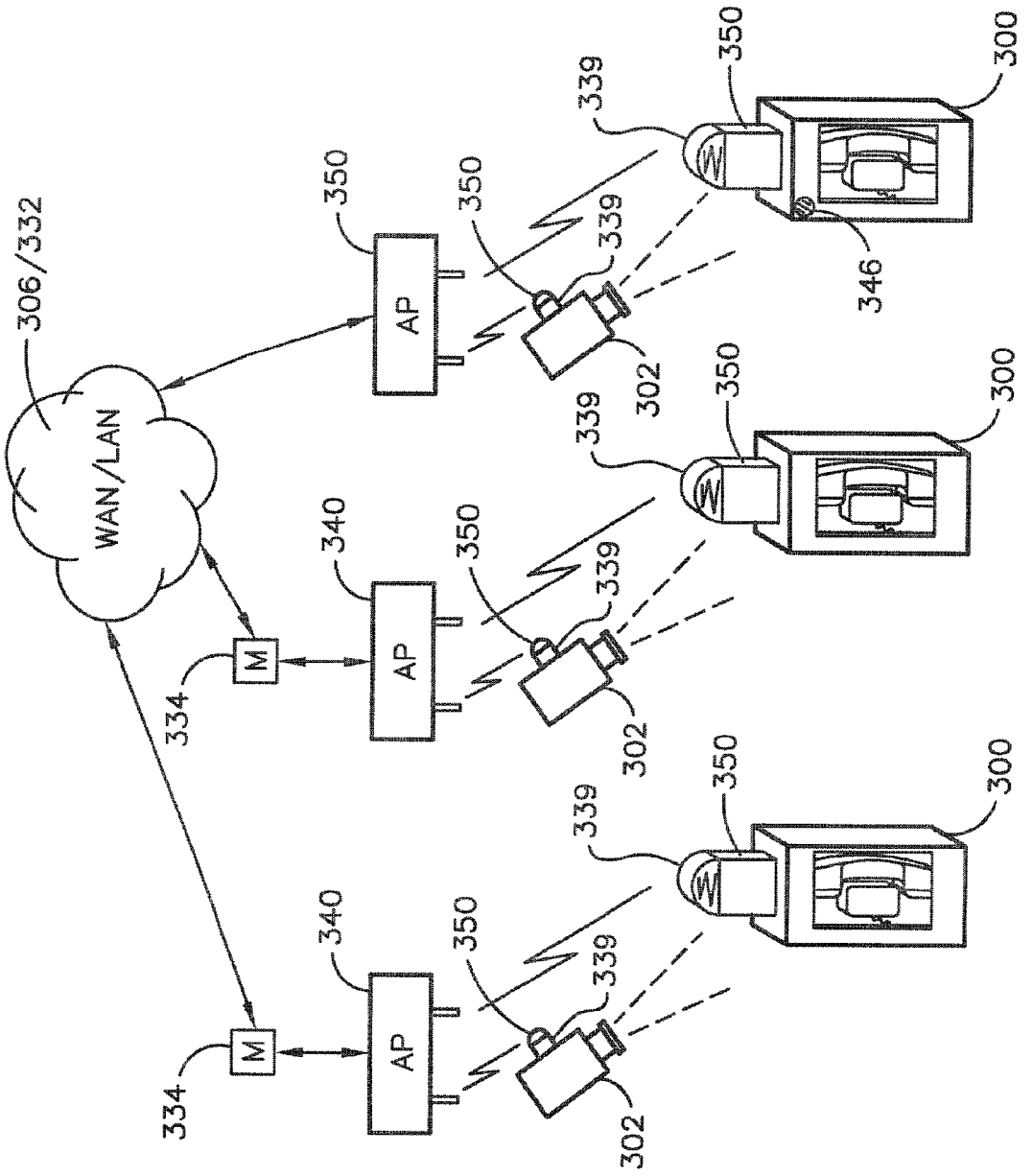

FIG. 21A

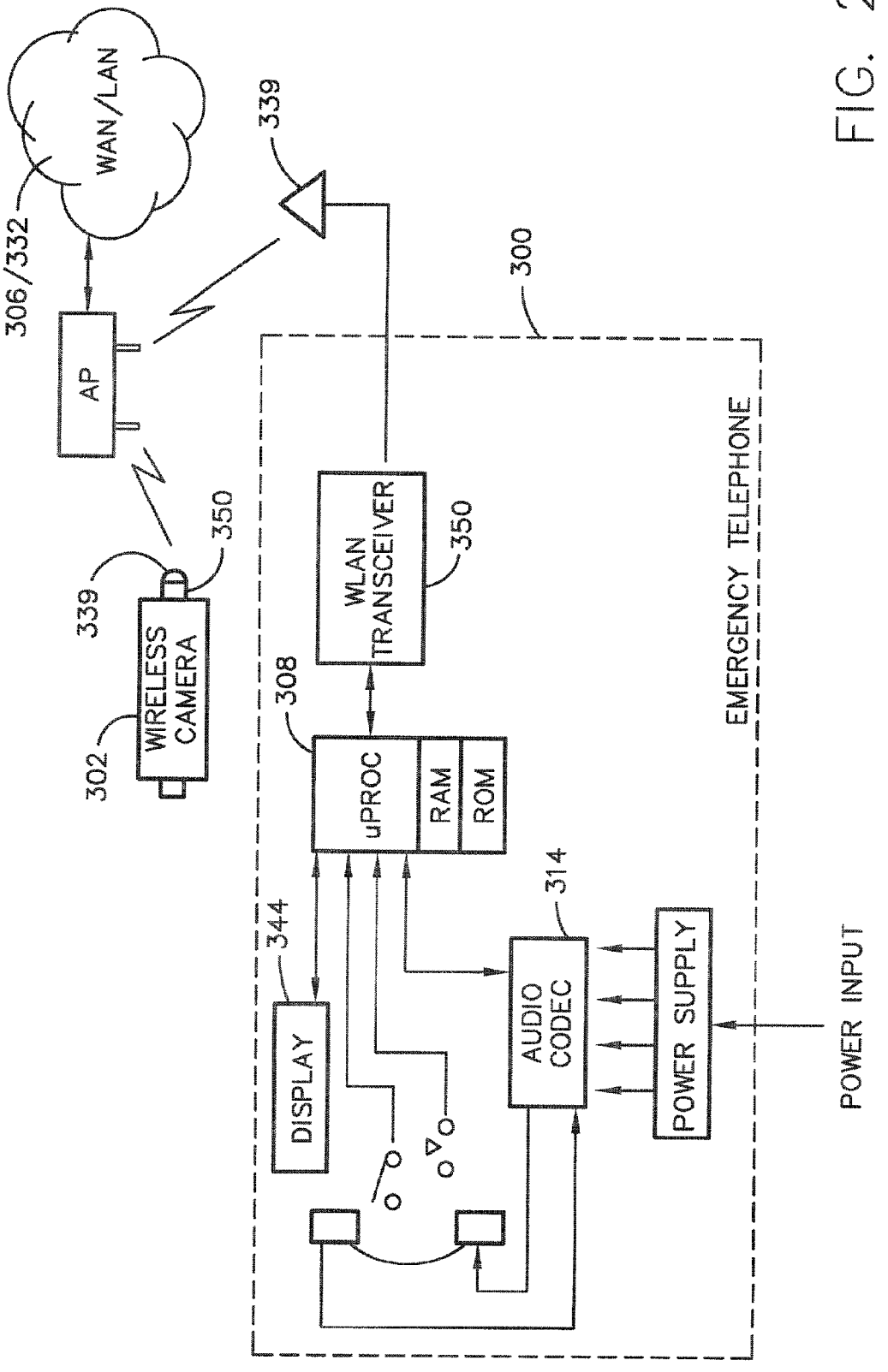
WAN/LAN
306/332
339
AP
300
339
350
WIRELESS CAMERA
302
WLAN TRANSCEIVER
350
308
uPROC
RAM
ROM
EMERGENCY TELEPHONE
344
314
DISPLAY
AUDIO CODEC
POWER SUPPLY
POWER INPUT

FIG. 21B

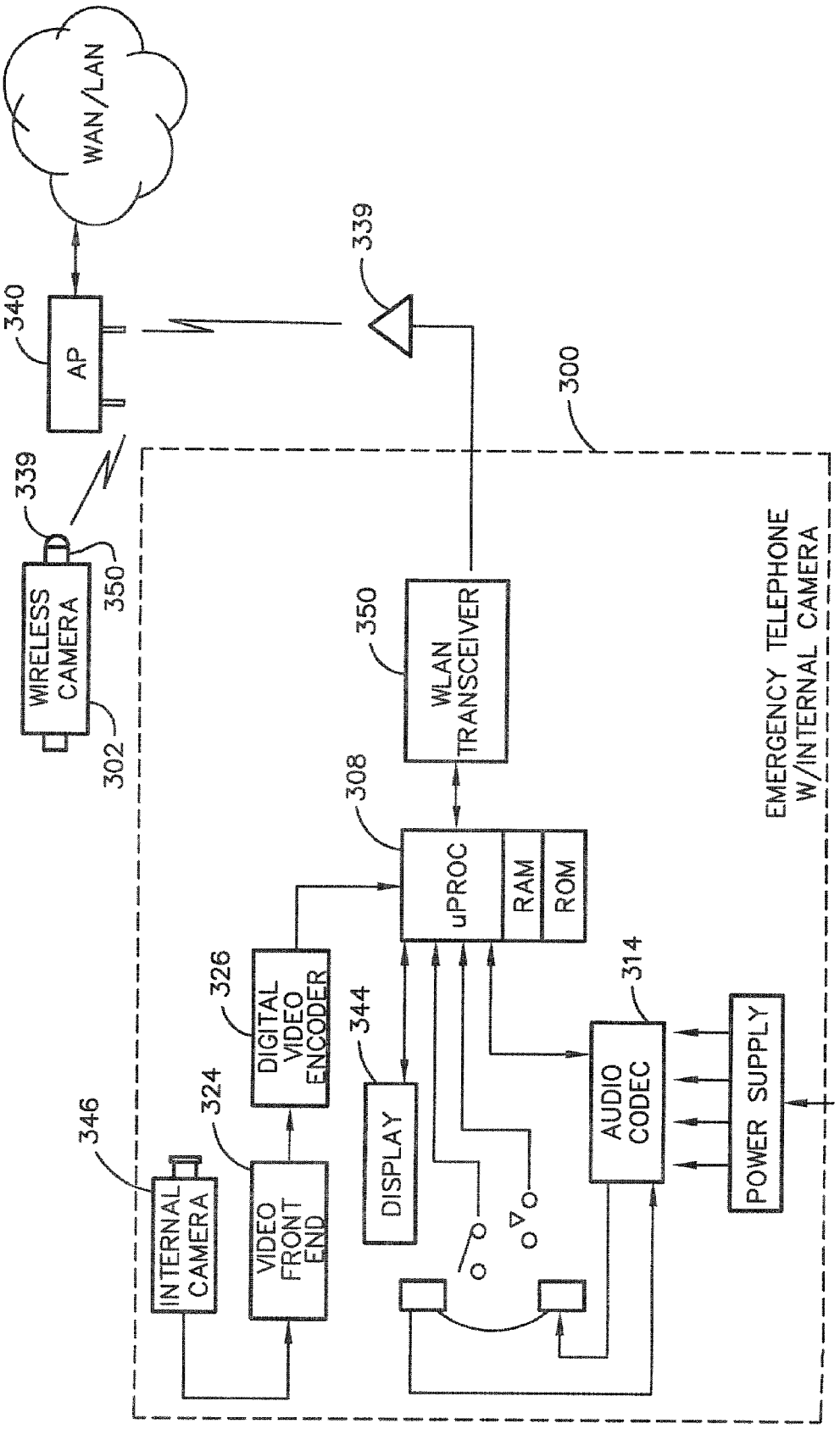
WAN/LAN
340
AP
339
339
300
WIRELESS CAMERA
350
302
350
WLAN TRANSCEIVER
308
uPROC
RAM
ROM
EMERGENCY TELEPHONE W/INTERNAL CAMERA
326
DIGITAL VIDEO ENCODER
344
DISPLAY
314
AUDIO CODEC
346
324
INTERNAL CAMERA
VIDEO FRONT END
POWER SUPPLY
POWER INPUT

FIG. 21C

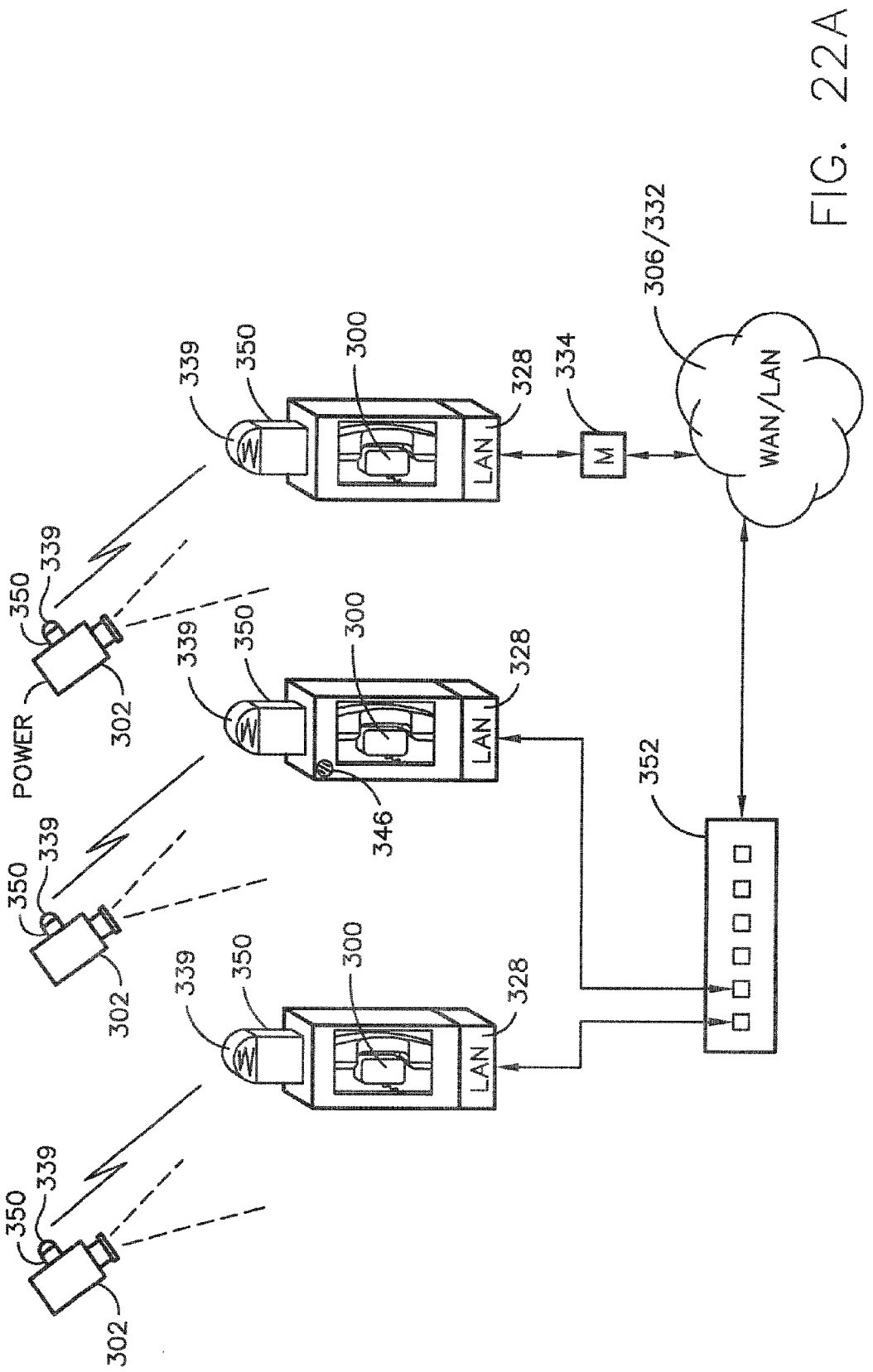

FIG. 22A

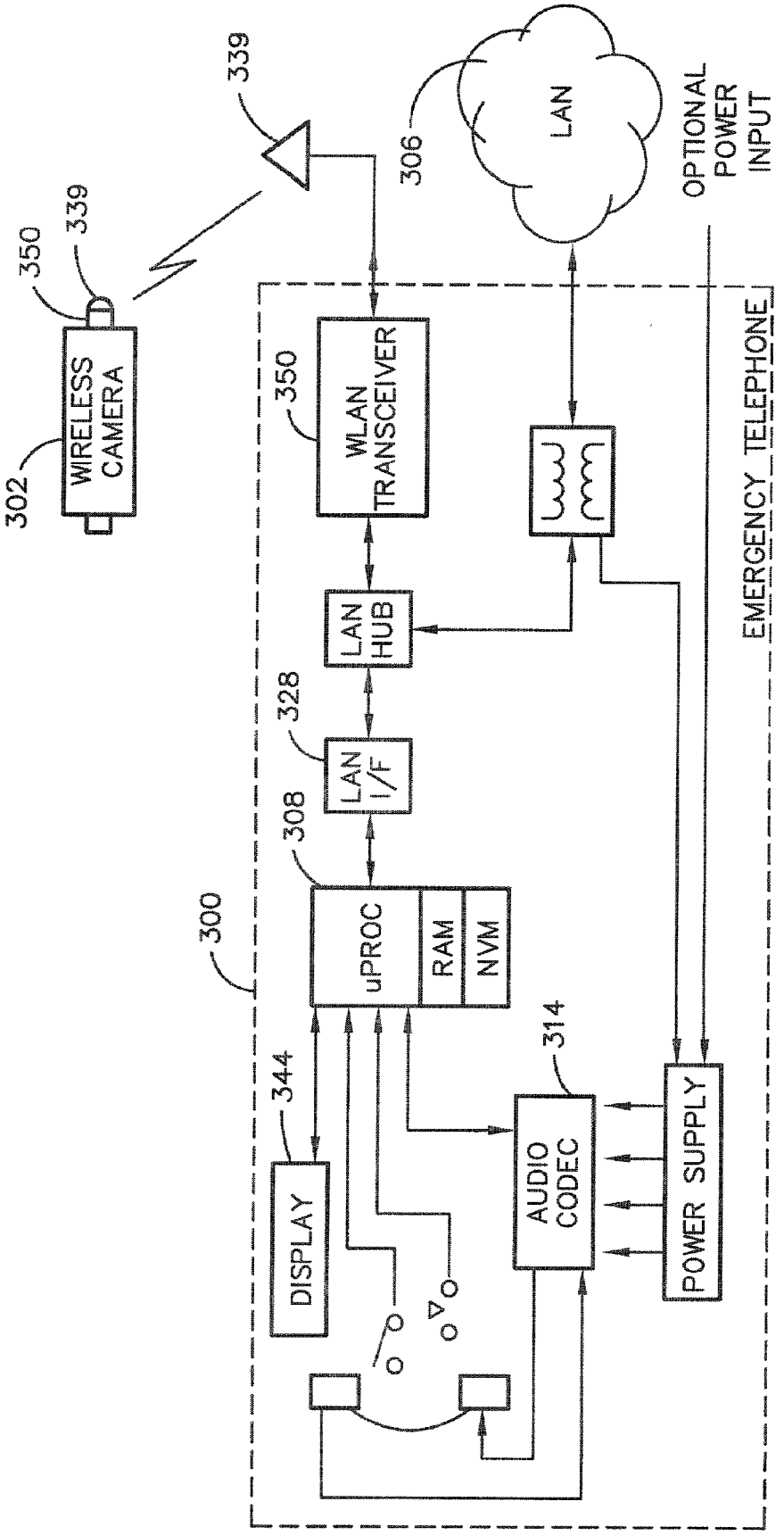
339
306
LAN
OPTIONAL POWER INPUT
350
339
WIRELESS CAMERA
302
350
WLAN TRANSCEIVER
EMERGENCY TELEPHONE
LAN HUB
328
LAN I/F
308
300
uPROC
RAM
NVM
344
314
DISPLAY
AUDIO CODEC
POWER SUPPLY

FIG. 22B

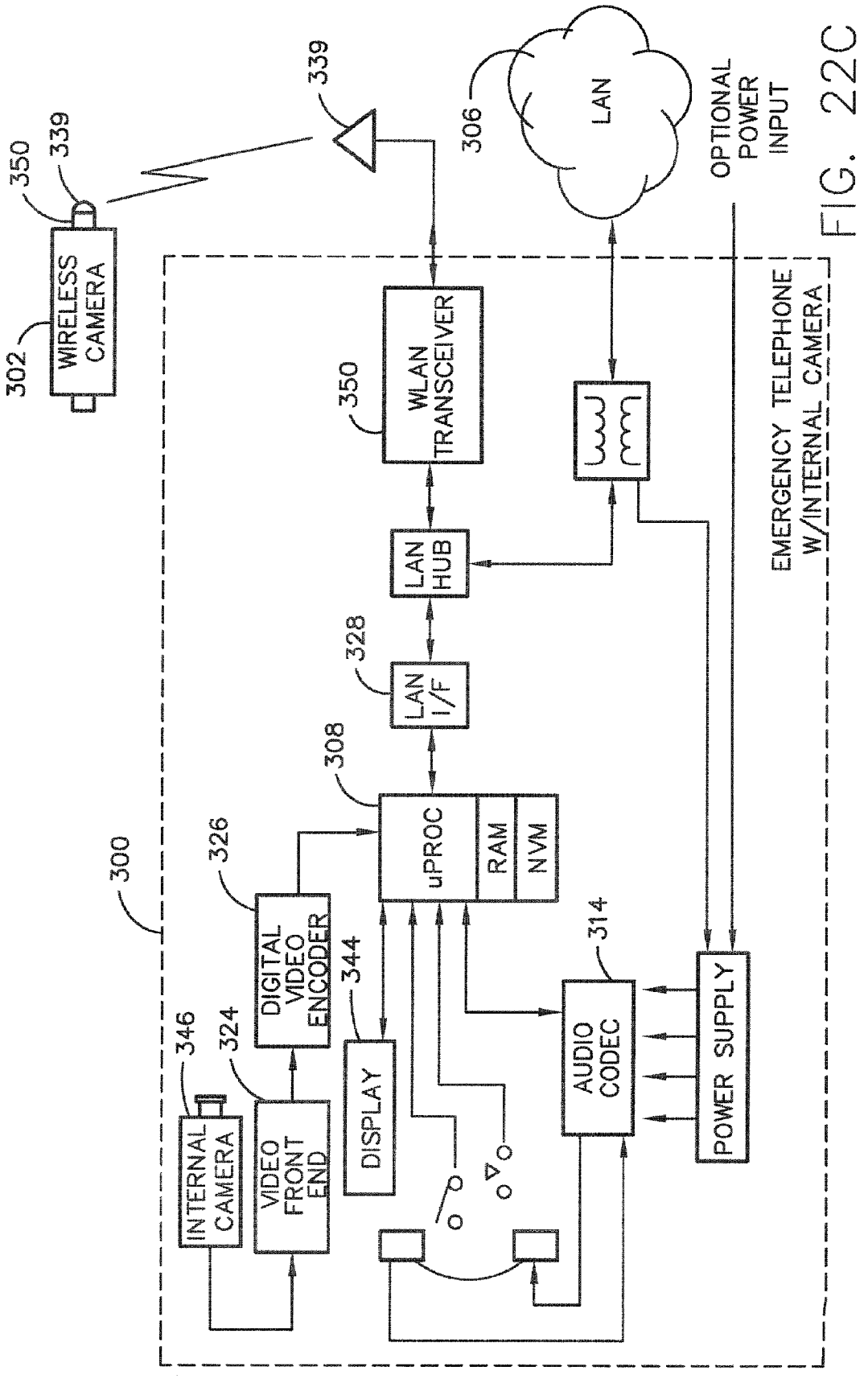
EMERGENCY TELEPHONE W/INTERNAL CAMERA
300
WIRELESS CAMERA
302
350
339
339
LAN
306
OPTIONAL POWER INPUT
WLAN TRANSCEIVER
350
LAN HUB
328
LAN I/F
308
uPROC
RAM
NVM
326
DIGITAL VIDEO ENCODER
344
DISPLAY
346
INTERNAL CAMERA
324
VIDEO FRONT END
AUDIO CODEC
314
POWER SUPPLY

FIG. 22C

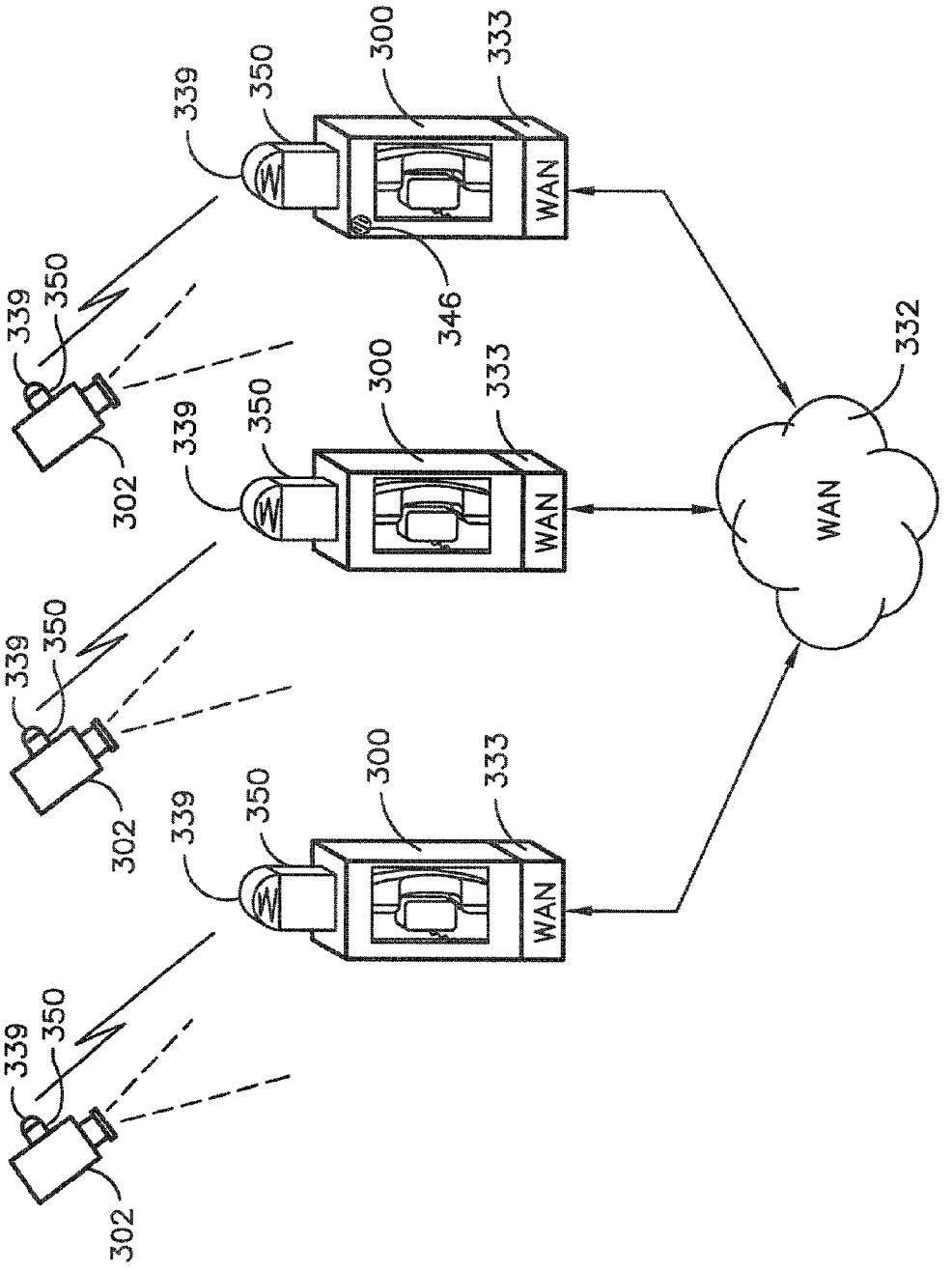

FIG. 23A

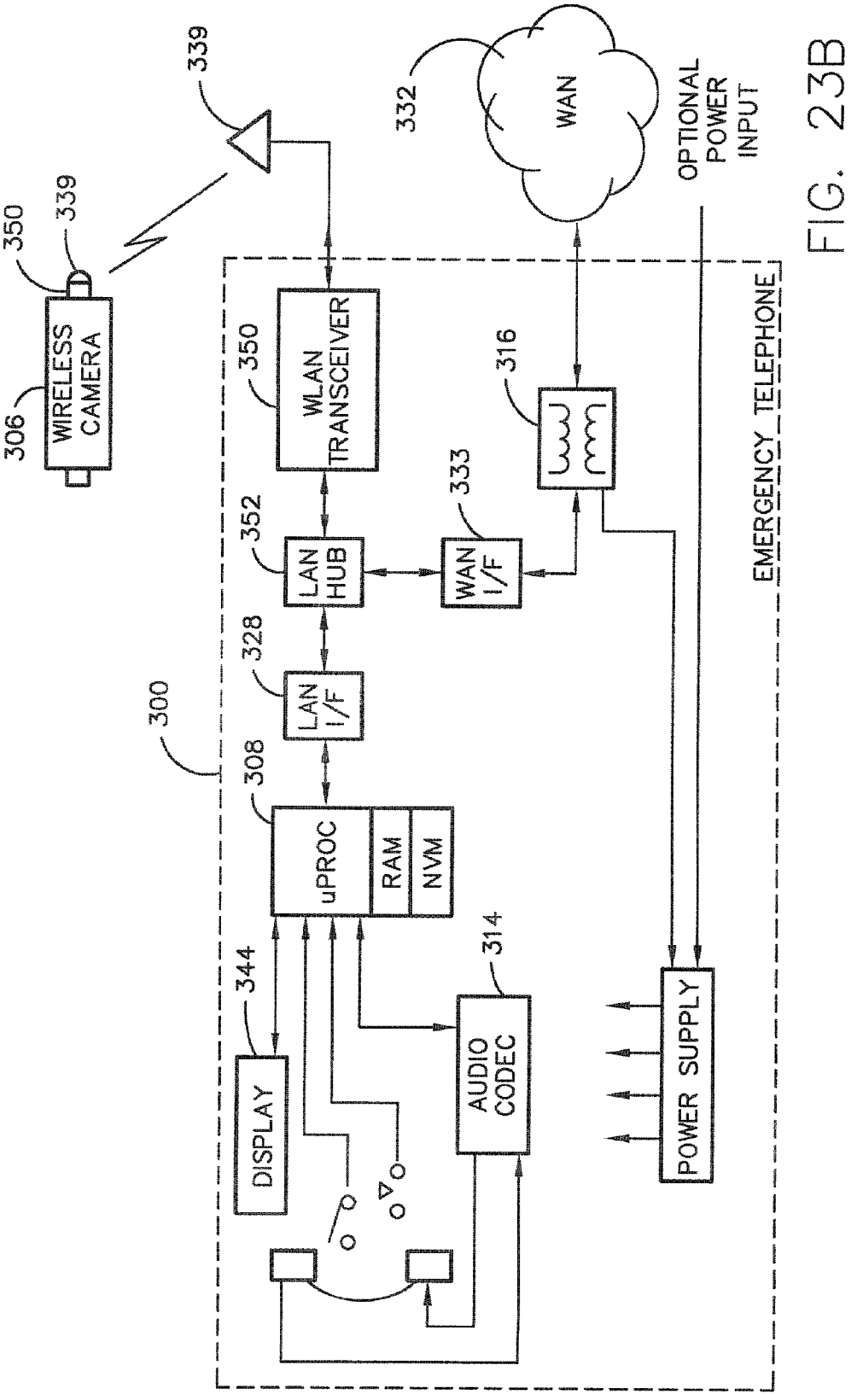
339
332
WAN
OPTIONAL POWER INPUT
350
339
WIRELESS CAMERA
306
350
WLAN TRANSCEIVER
316
333
352
LAN HUB
WAN I/F
328
LAN I/F
300
308
uPROC
RAM
NVM
344
DISPLAY
314
AUDIO CODEC
POWER SUPPLY
EMERGENCY TELEPHONE

FIG. 23B

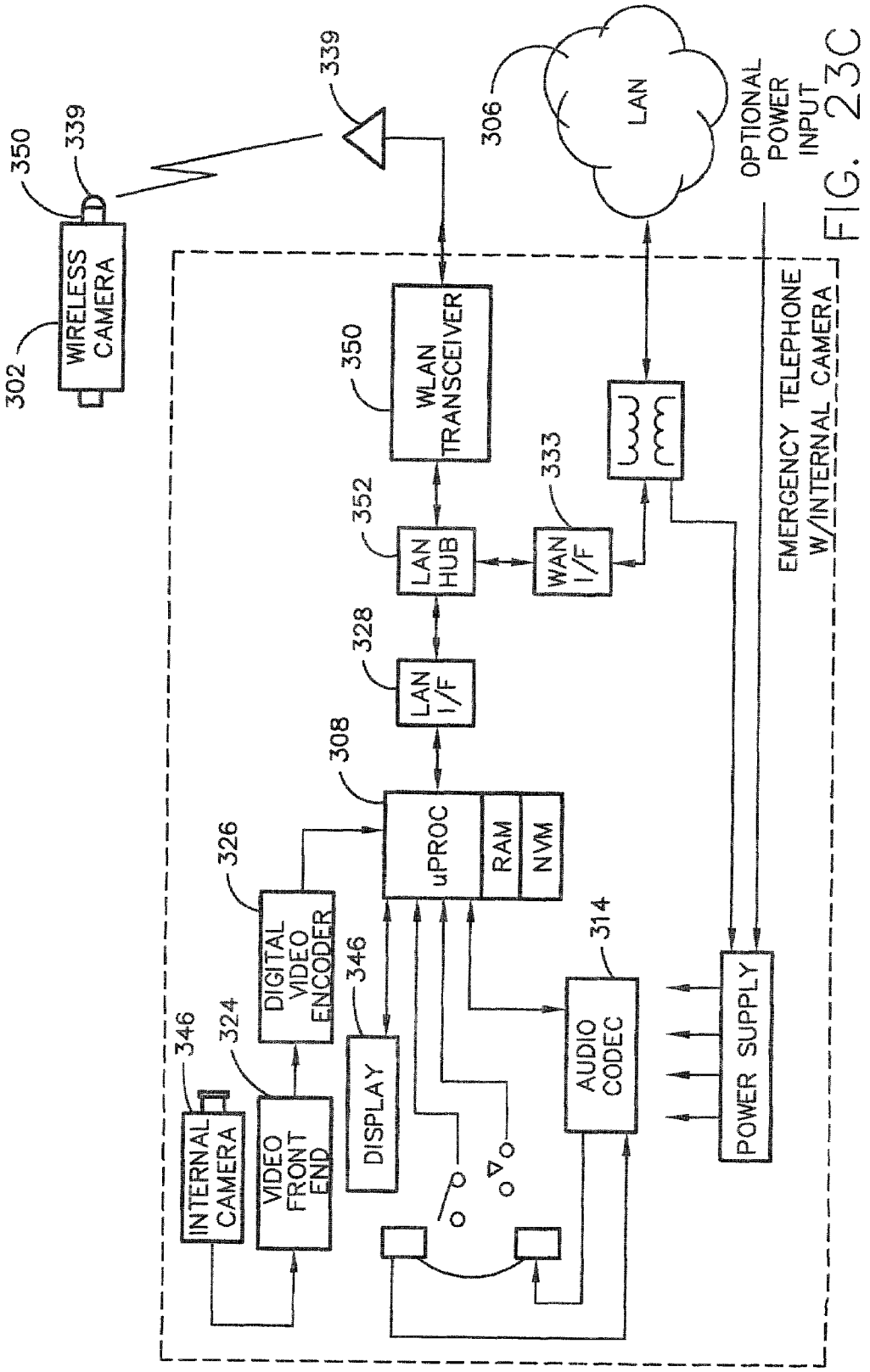
302
WIRELESS CAMERA
350
339
339
306
LAN
OPTIONAL POWER INPUT
EMERGENCY TELEPHONE W/INTERNAL CAMERA
350
WLAN TRANSCEIVER
352
LAN HUB
333
WAN I/F
328
LAN I/F
308
uPROC
RAM
NVM
326
DIGITAL VIDEO ENCODER
346
324
346
INTERNAL CAMERA
VIDEO FRONT END
DISPLAY
314
AUDIO CODEC
POWER SUPPLY

FIG. 23C

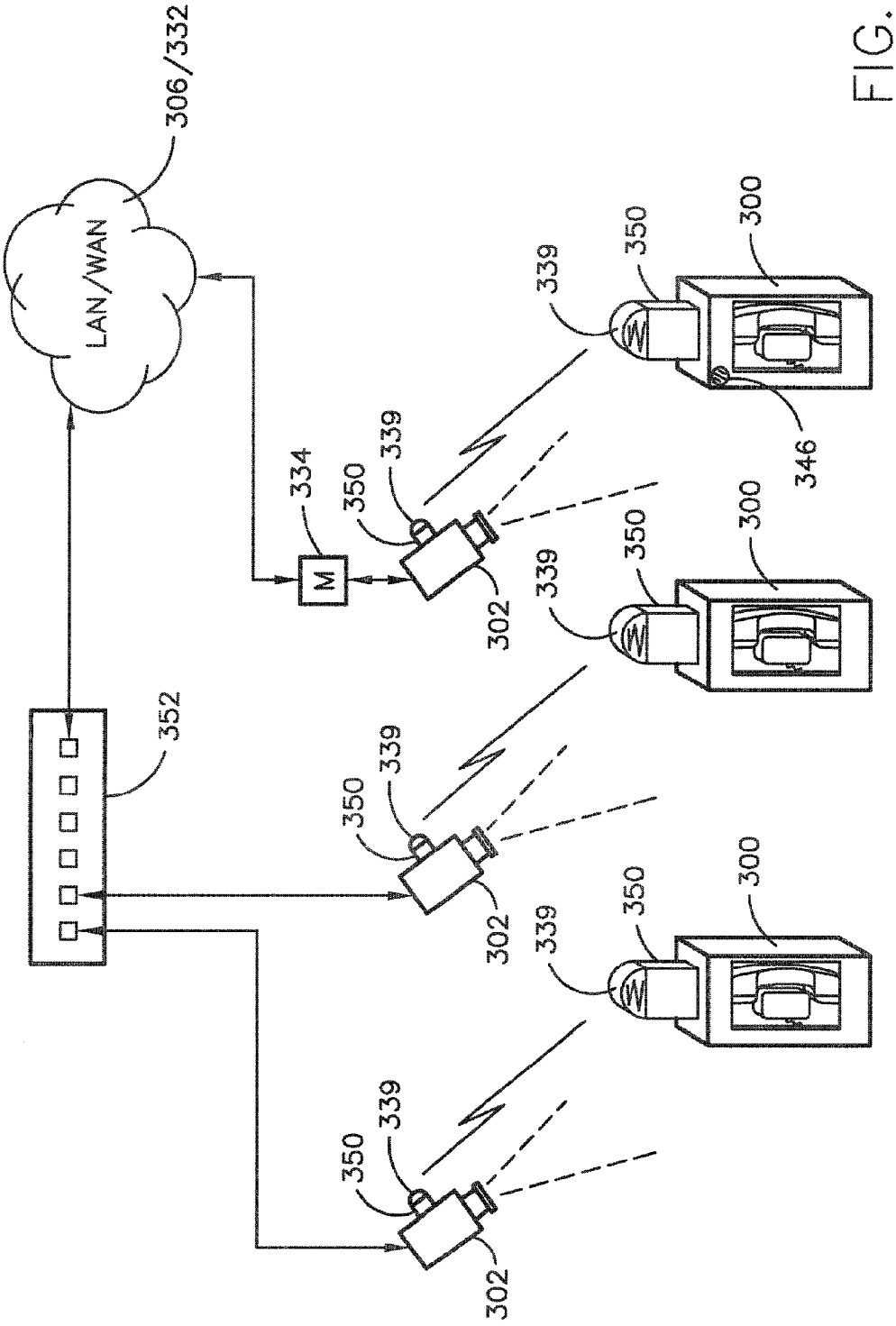

FIG. 24A

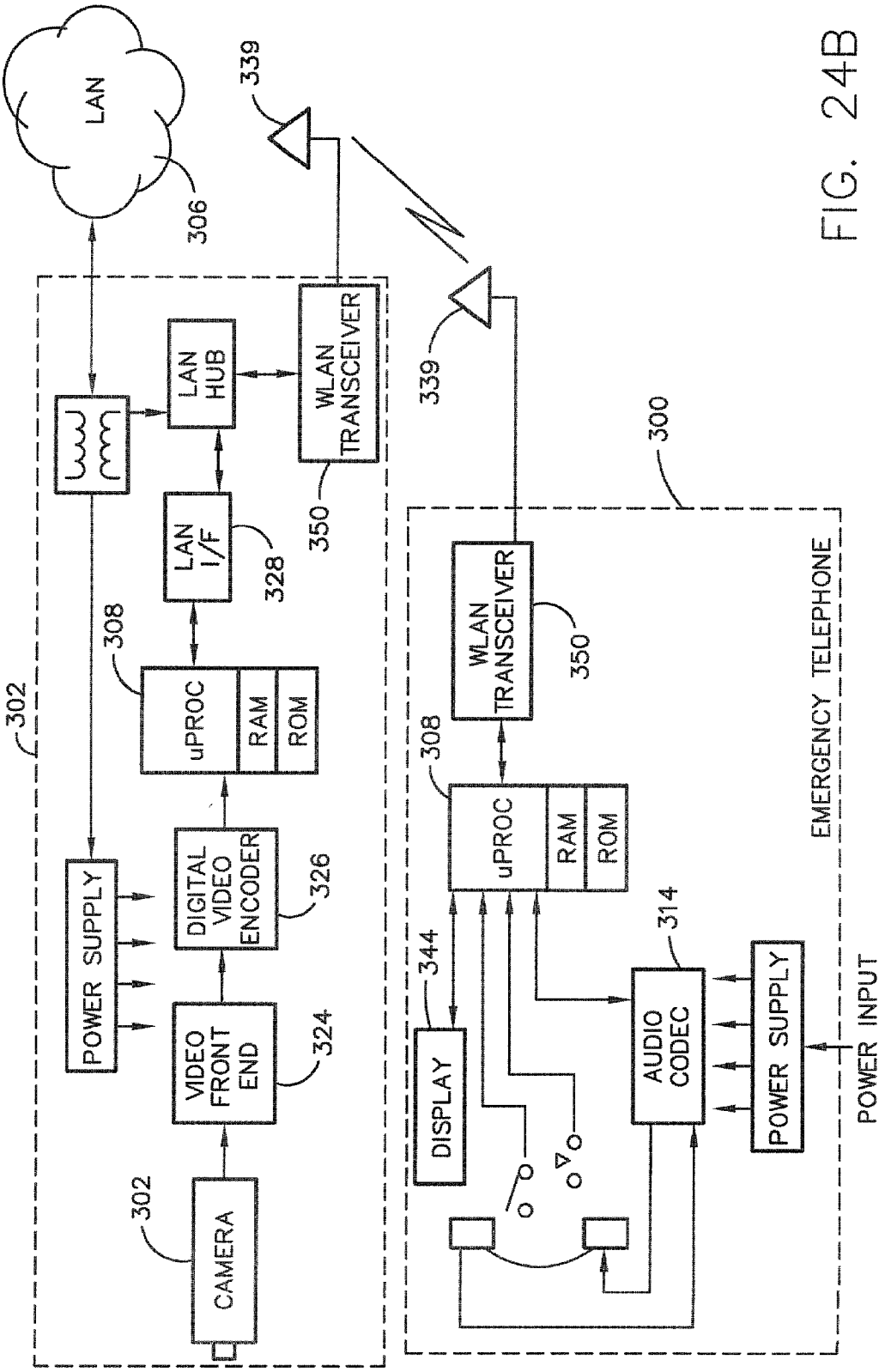
LAN
306
339
339
302
LAN HUB
WLAN TRANSCEIVER
350
LAN I/F
328
308
uPROC
RAM
ROM
POWER SUPPLY
DIGITAL VIDEO ENCODER
326
VIDEO FRONT END
324
CAMERA
302
300
WLAN TRANSCEIVER
350
308
uPROC
RAM
ROM
EMERGENCY TELEPHONE
344
DISPLAY
314
AUDIO CODEC
POWER SUPPLY
POWER INPUT

FIG. 24B

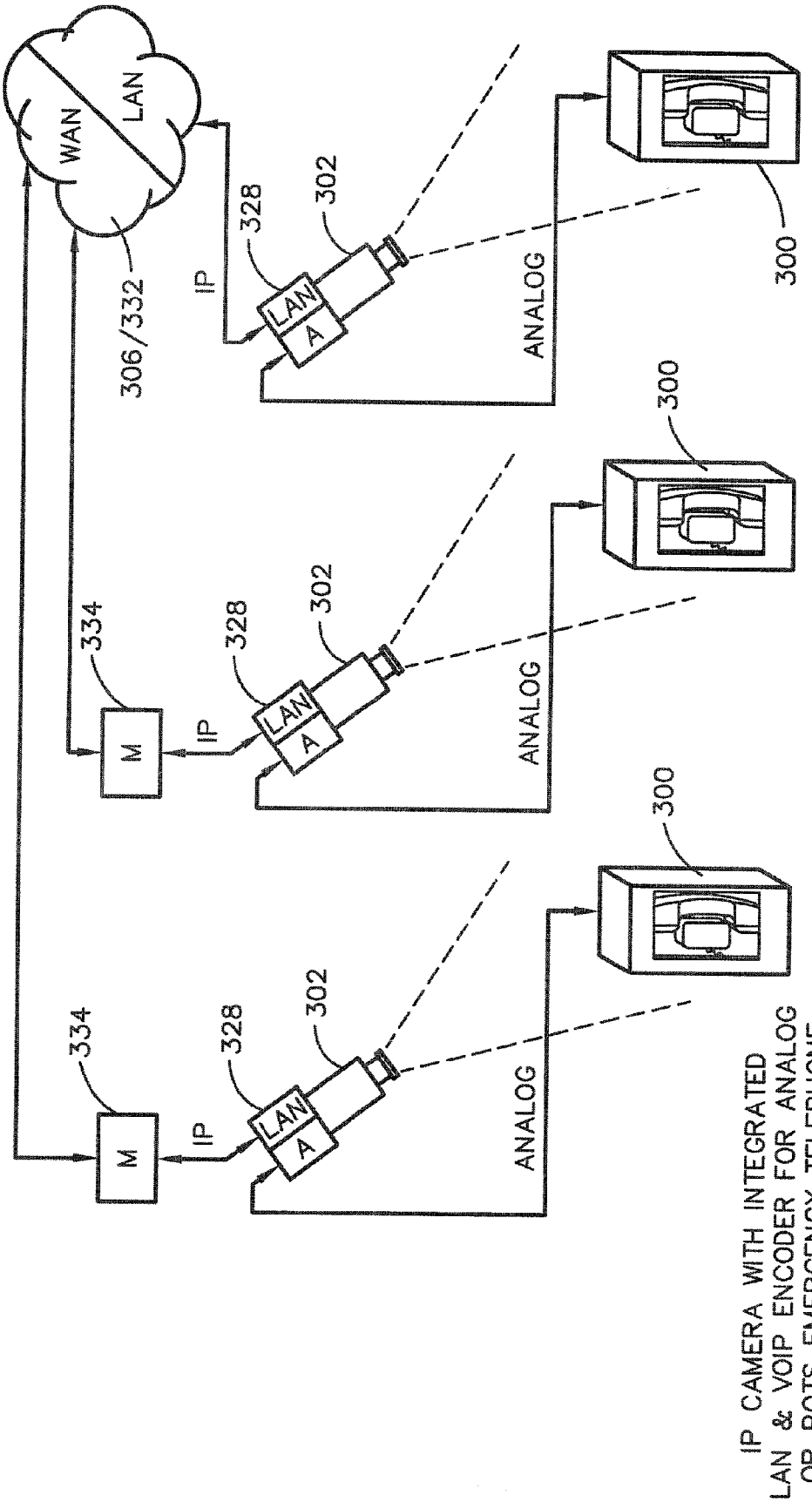
WAN
LAN
306/332
IP
328
302
LAN
A
ANALOG
300
334
M
IP
328
302
LAN
A
ANALOG
300
334
M
IP
328
302
LAN
A
ANALOG
300
IP CAMERA WITH INTEGRATED
LAN & VOIP ENCODER FOR ANALOG
OR POTS EMERGENCY TELEPHONE

FIG. 25A

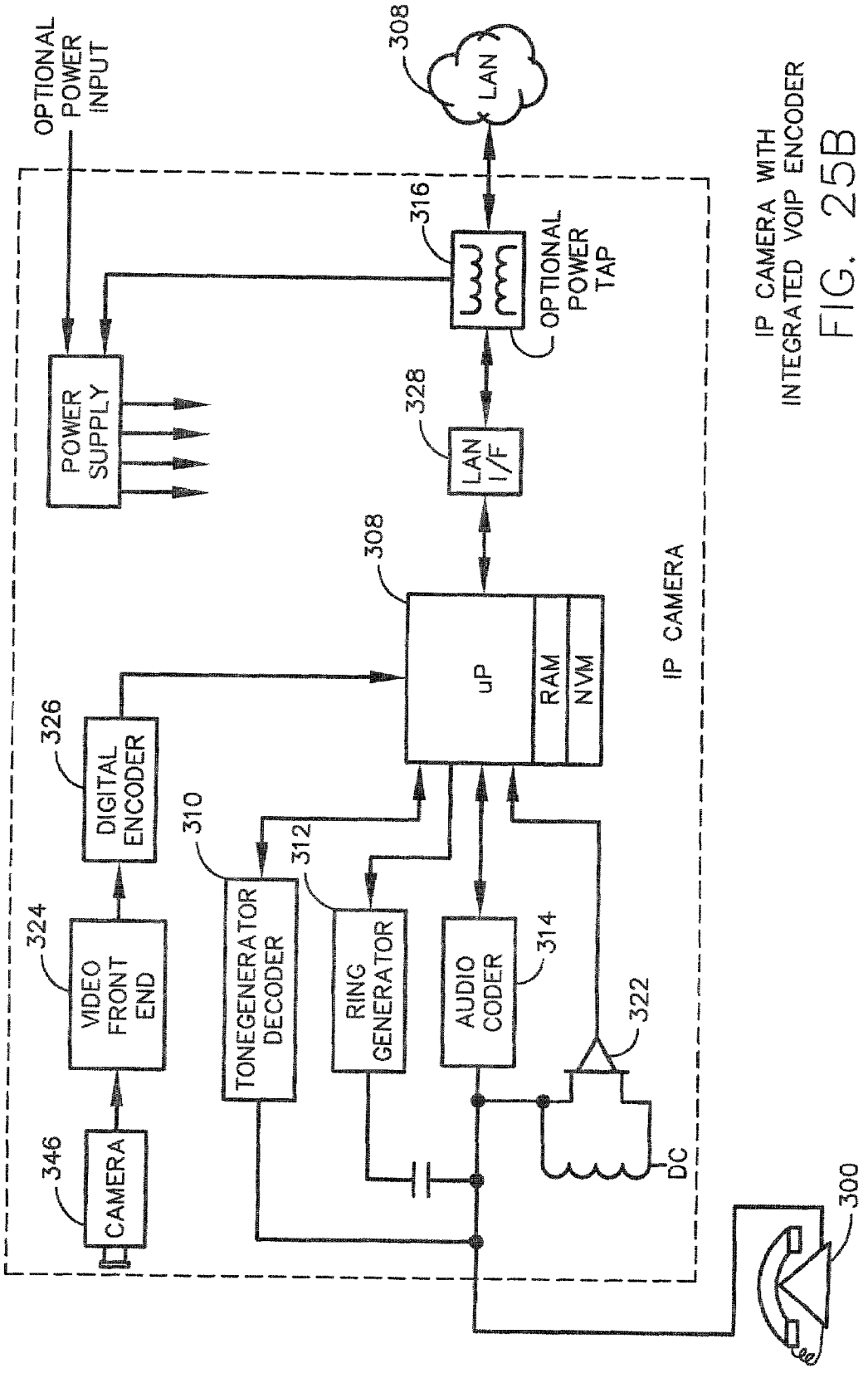

IP CAMERA WITH INTEGRATED VOIP ENCODER

FIG. 25B

FIG. 26A

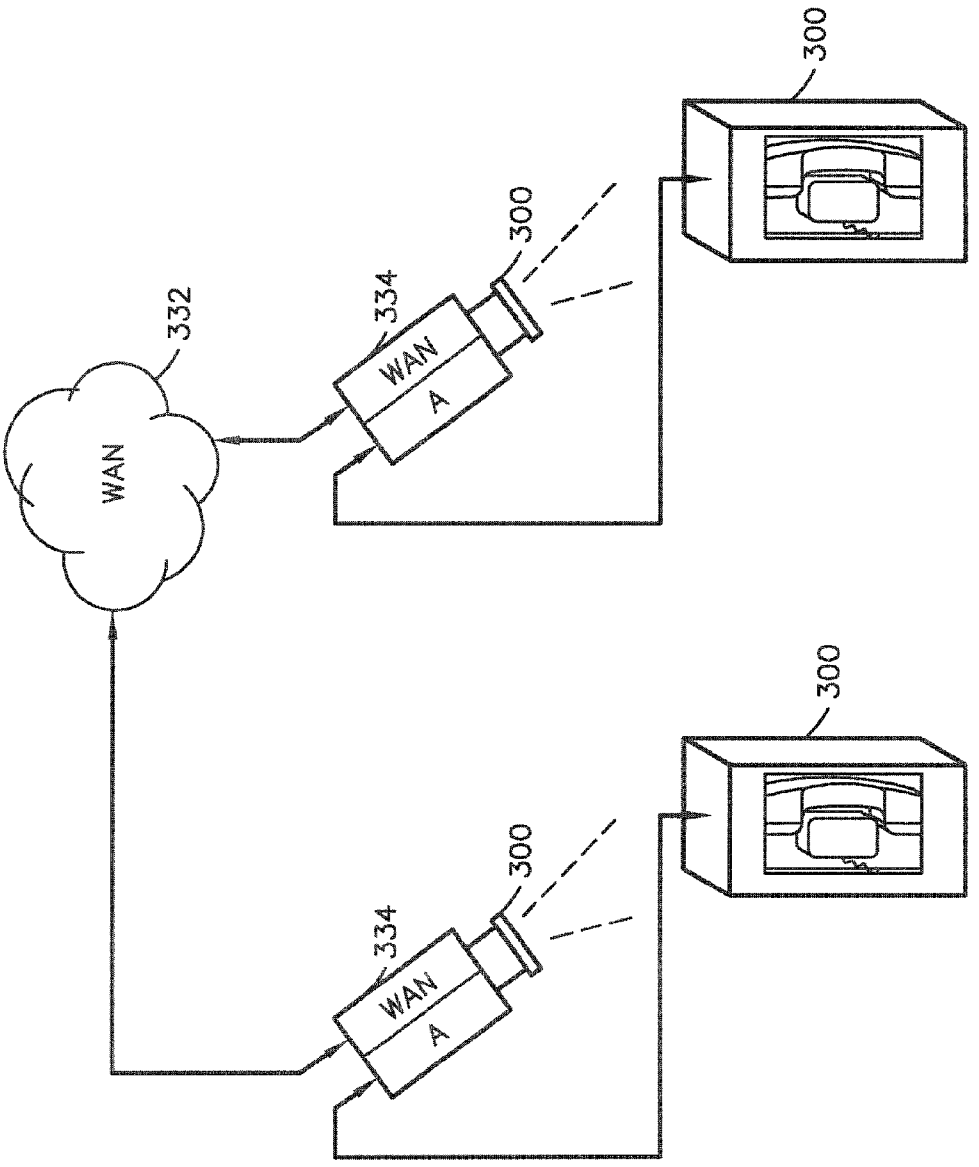

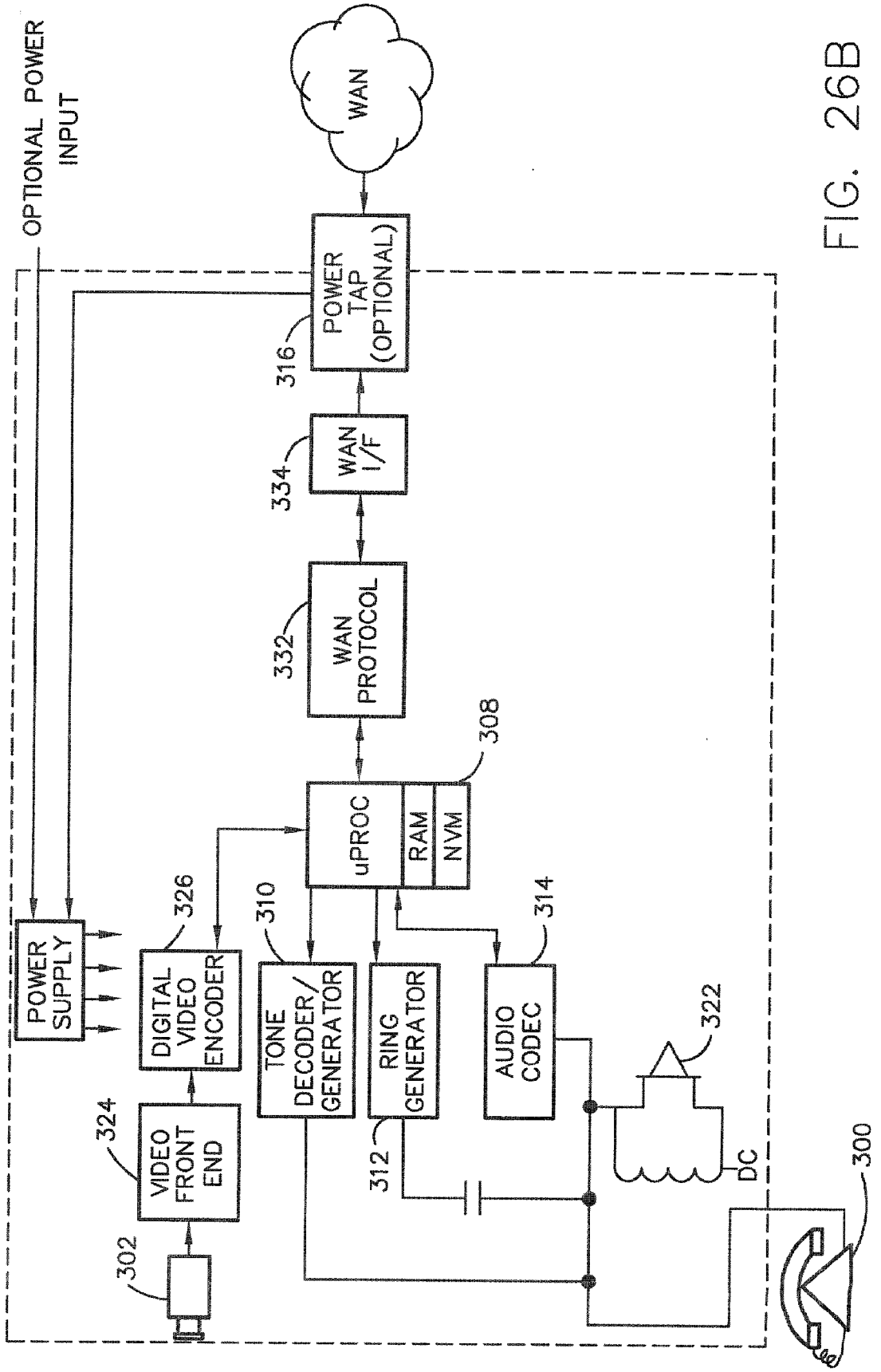
OPTIONAL POWER INPUT
WAN
316
POWER TAP (OPTIONAL)
334
WAN I/F
332
WAN PROTOCOL
308
uPROC
RAM
NVM
326
DIGITAL VIDEO ENCODER
310
TONE DECODER/ GENERATOR
314
AUDIO CODEC
322
POWER SUPPLY
324
VIDEO FRONT END
RING GENERATOR
312
DC
302
300

FIG. 26B

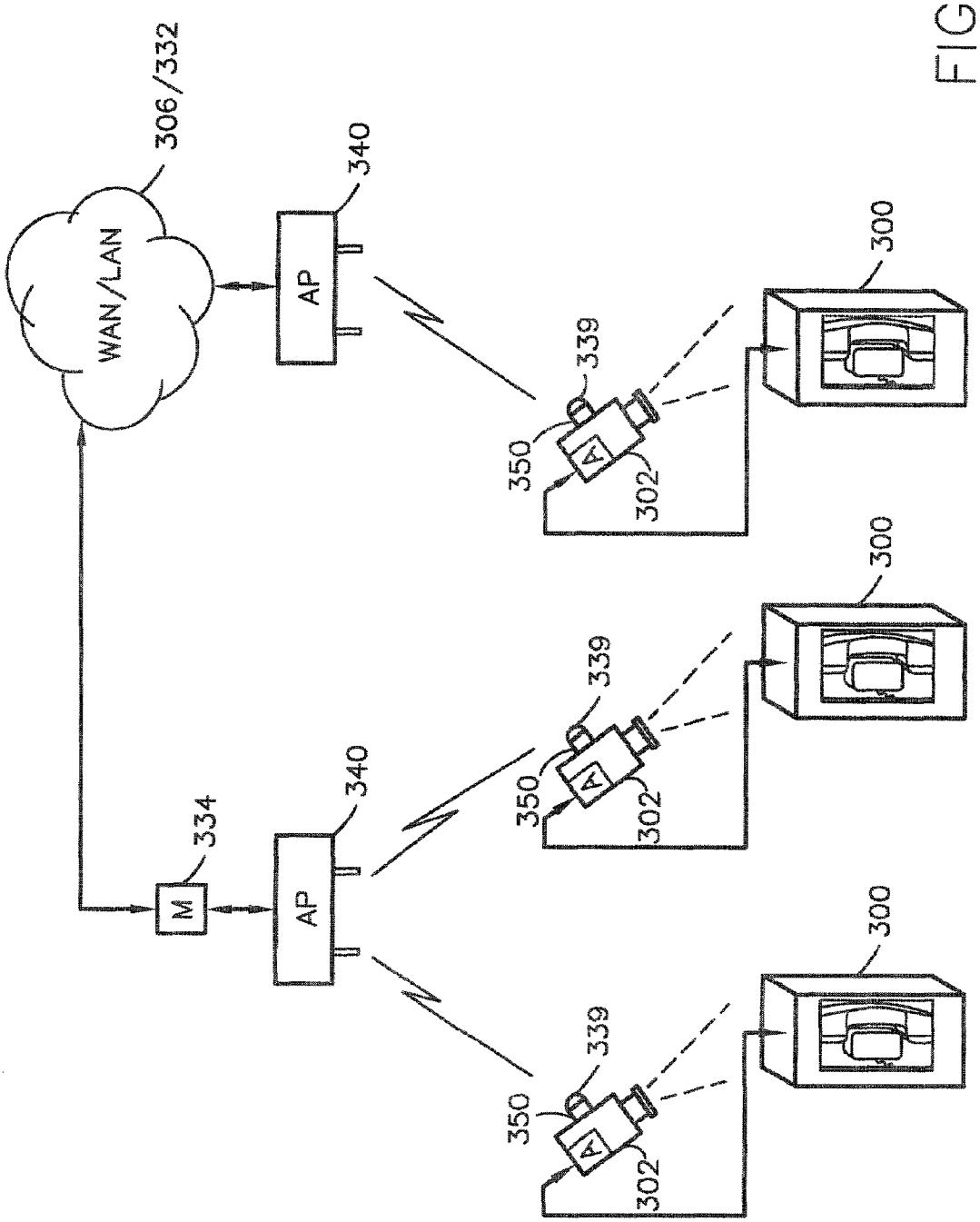

FIG. 27A

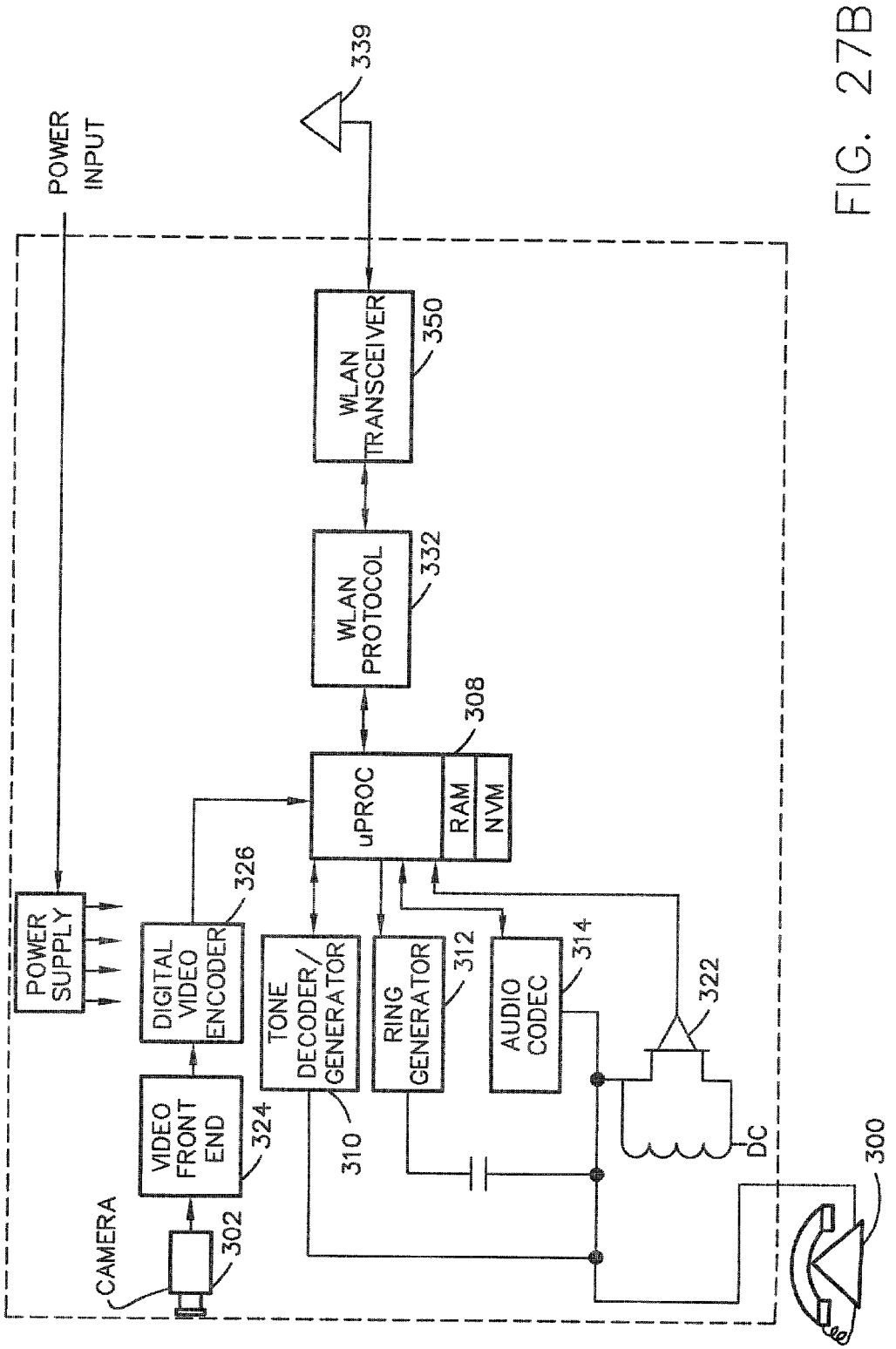
339
POWER INPUT
WLAN TRANSCEIVER
350
WLAN PROTOCOL
332
308
uPROC
RAM
NVM
326
DIGITAL VIDEO ENCODER
TONE DECODER/ GENERATOR
RING GENERATOR
312
AUDIO CODEC
314
322
POWER SUPPLY
VIDEO FRONT END
324
310
DC
300
CAMERA
302

FIG. 27B

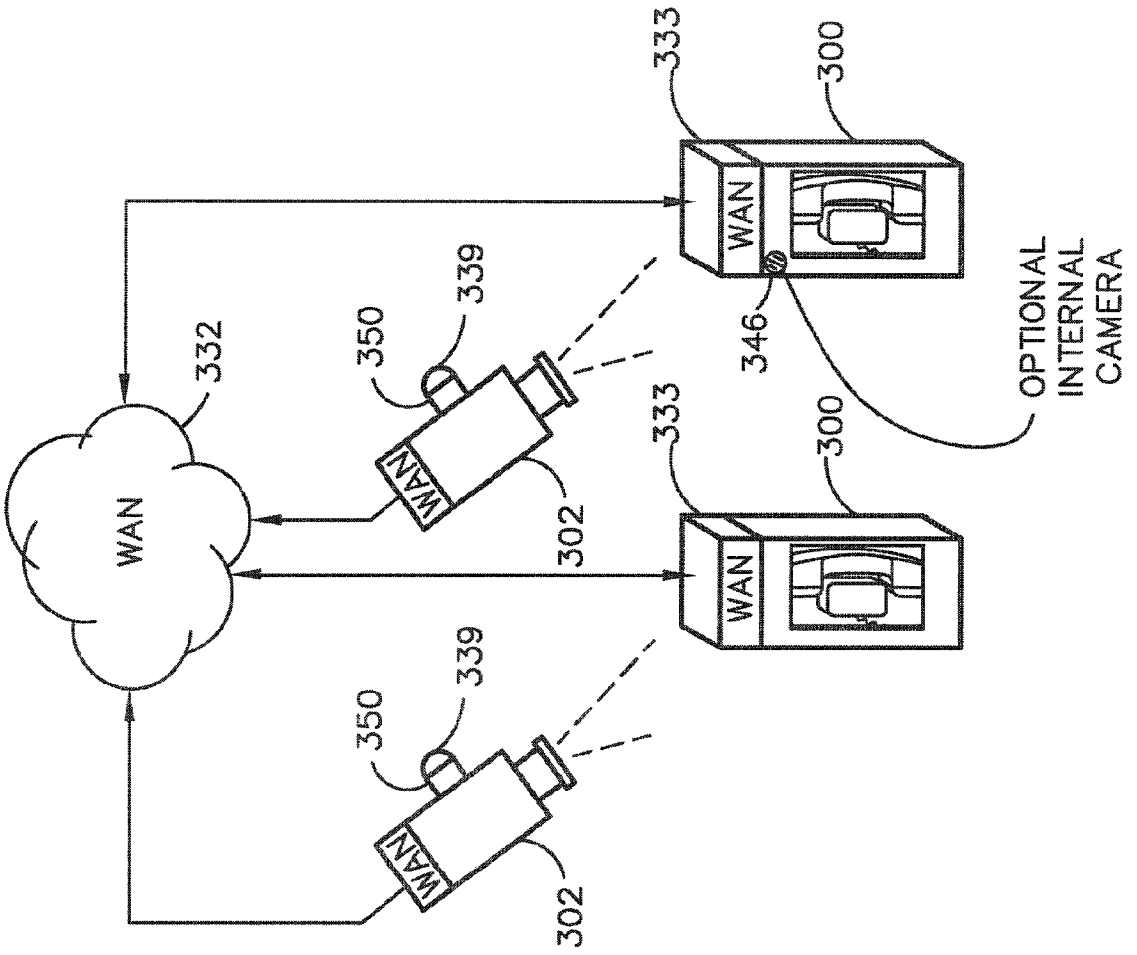

FIG. 28A

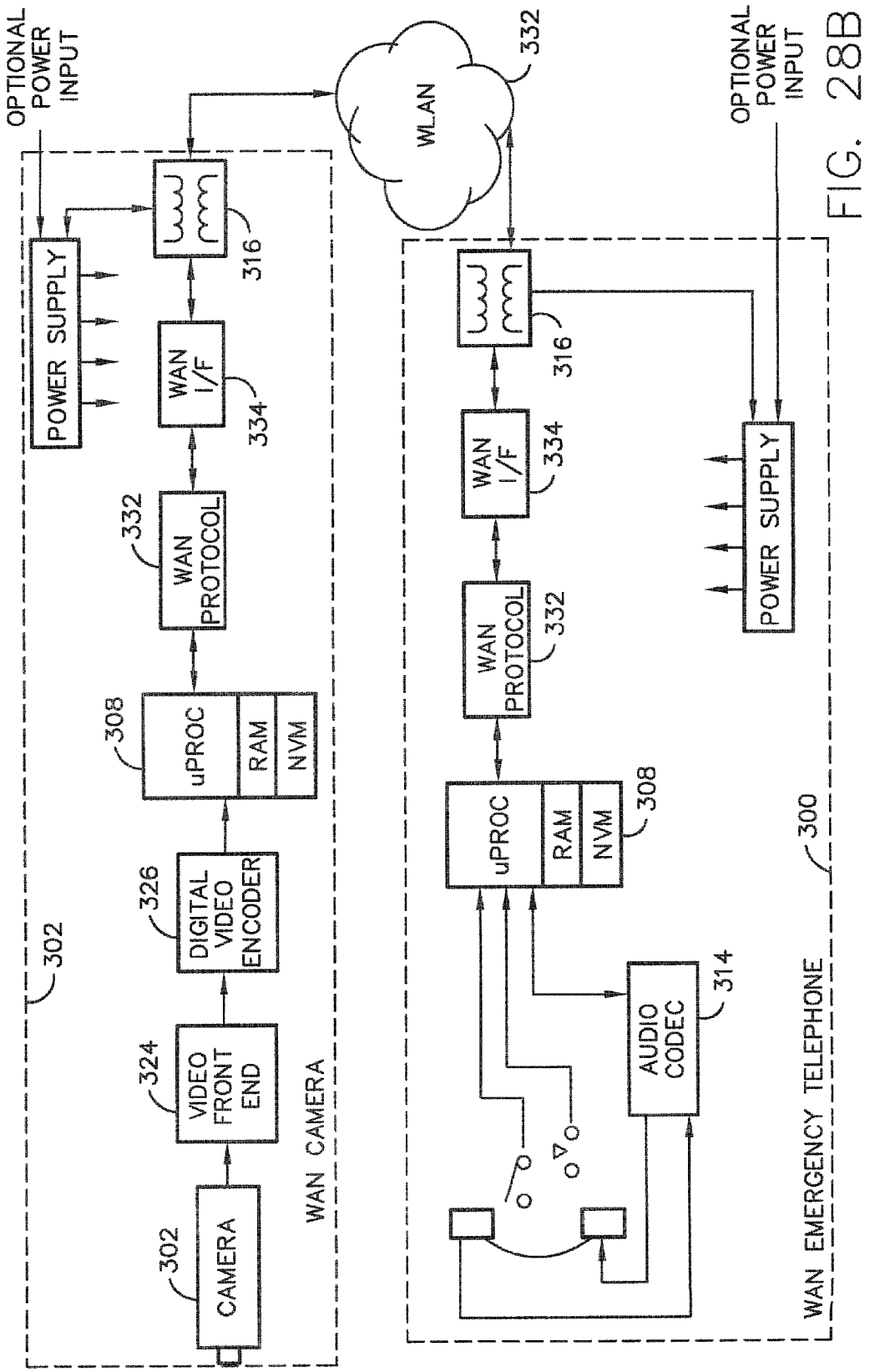
OPTIONAL POWER INPUT
POWER SUPPLY
316
WAN I/F
334
WAN PROTOCOL
332
uPROC
RAM
NVM
308
DIGITAL VIDEO ENCODER
326
VIDEO FRONT END
324
CAMERA
302
WAN CAMERA
WLAN
332
OPTIONAL POWER INPUT
316
WAN I/F
334
WAN PROTOCOL
332
POWER SUPPLY
uPROC
RAM
NVM
308
AUDIO CODEC
314
300
WAN EMERGENCY TELEPHONE

FIG. 28B

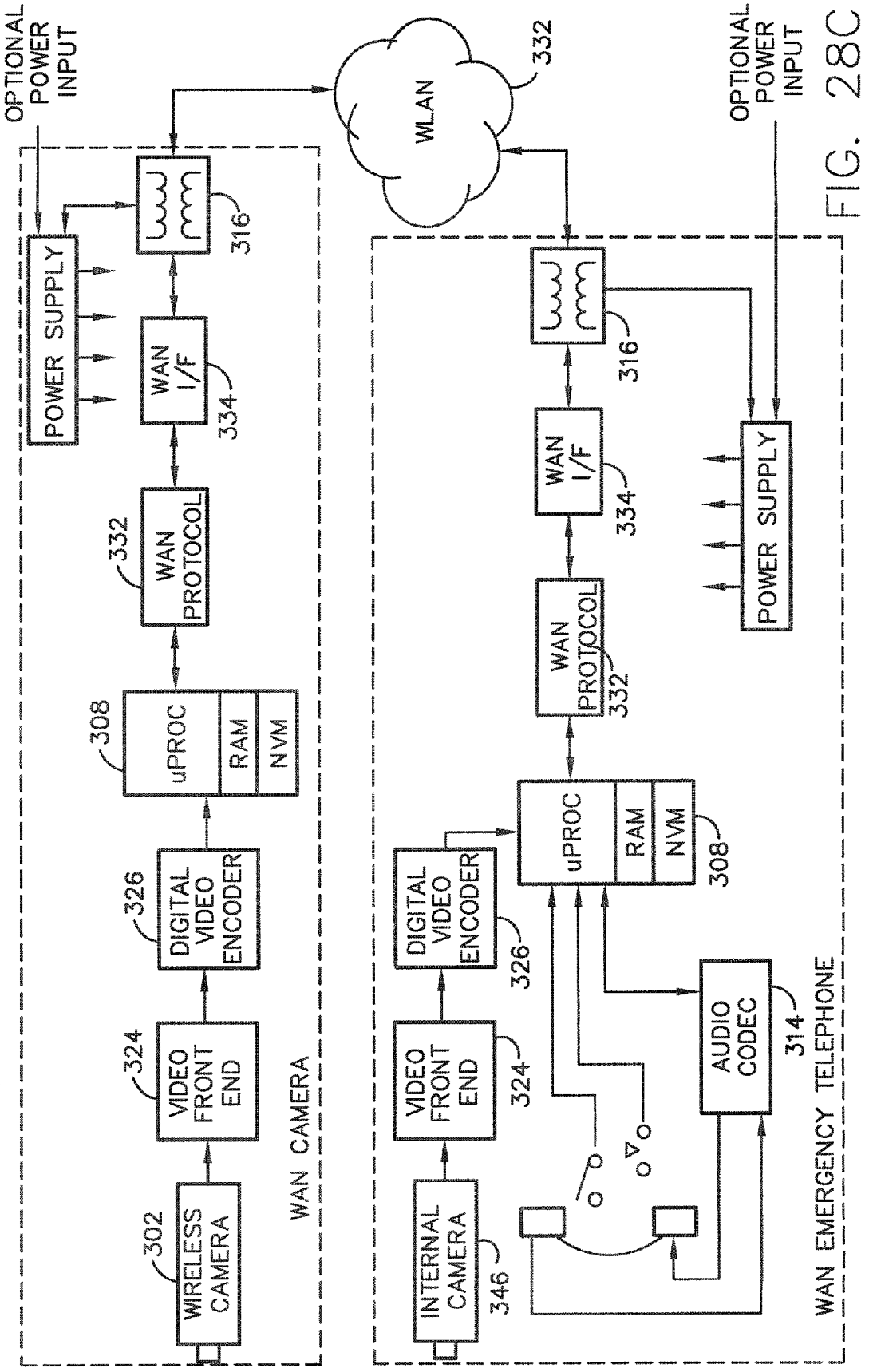
OPTIONAL POWER INPUT
POWER SUPPLY
316
WAN I/F
334
WAN PROTOCOL
332
uPROC
RAM
NVM
308
DIGITAL VIDEO ENCODER
326
VIDEO FRONT END
324
WIRELESS CAMERA
302
WAN CAMERA
WLAN
332
OPTIONAL POWER INPUT
316
WAN I/F
334
WAN PROTOCOL
332
POWER SUPPLY
uPROC
RAM
NVM
308
DIGITAL VIDEO ENCODER
326
VIDEO FRONT END
324
AUDIO CODEC
314
INTERNAL CAMERA
346
WAN EMERGENCY TELEPHONE

FIG. 28C

Fig 29A.1

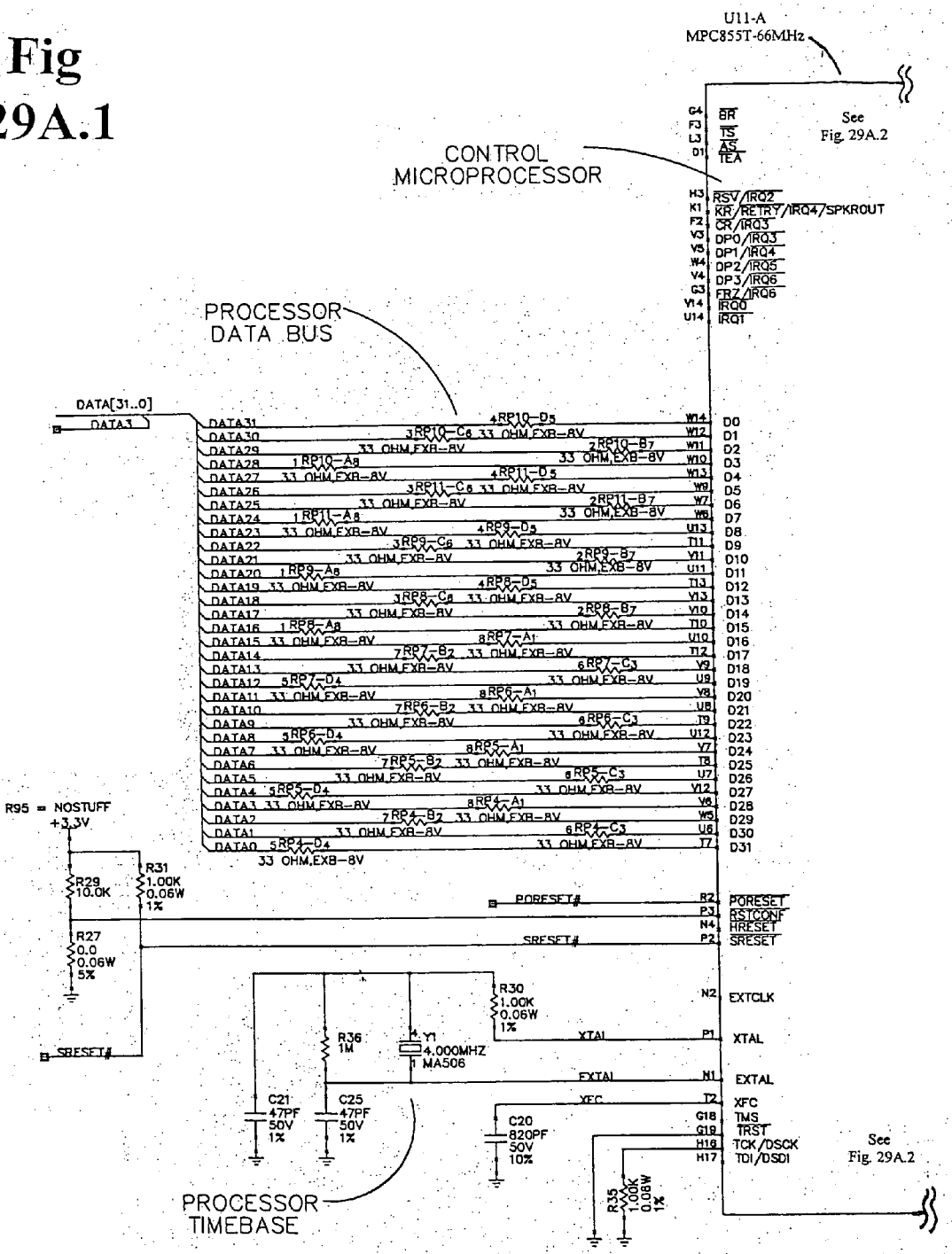
U11-A
MPC855T-66MHz
See Fig. 29A.2
CONTROL MICROPROCESSOR
PROCESSOR DATA BUS
DATA[31..0]
R95 = NOSTUFF
+3.3V
R29 10.0K
R31 1.00K 0.06W 1%
R27 0.0 0.06W 5%
33 OHM,EXB-8V
PORESET#
SRESET#
R30 1.00K 0.06W 1%
R36 1M
Y1 4.000MHZ MA506
C21 47PF 50V 1%
C25 47PF 50V 1%
C20 820PF 50V 10%
R35 1.00K 0.06W 1%
PROCESSOR TIMEBASE
See Fig. 29A.2

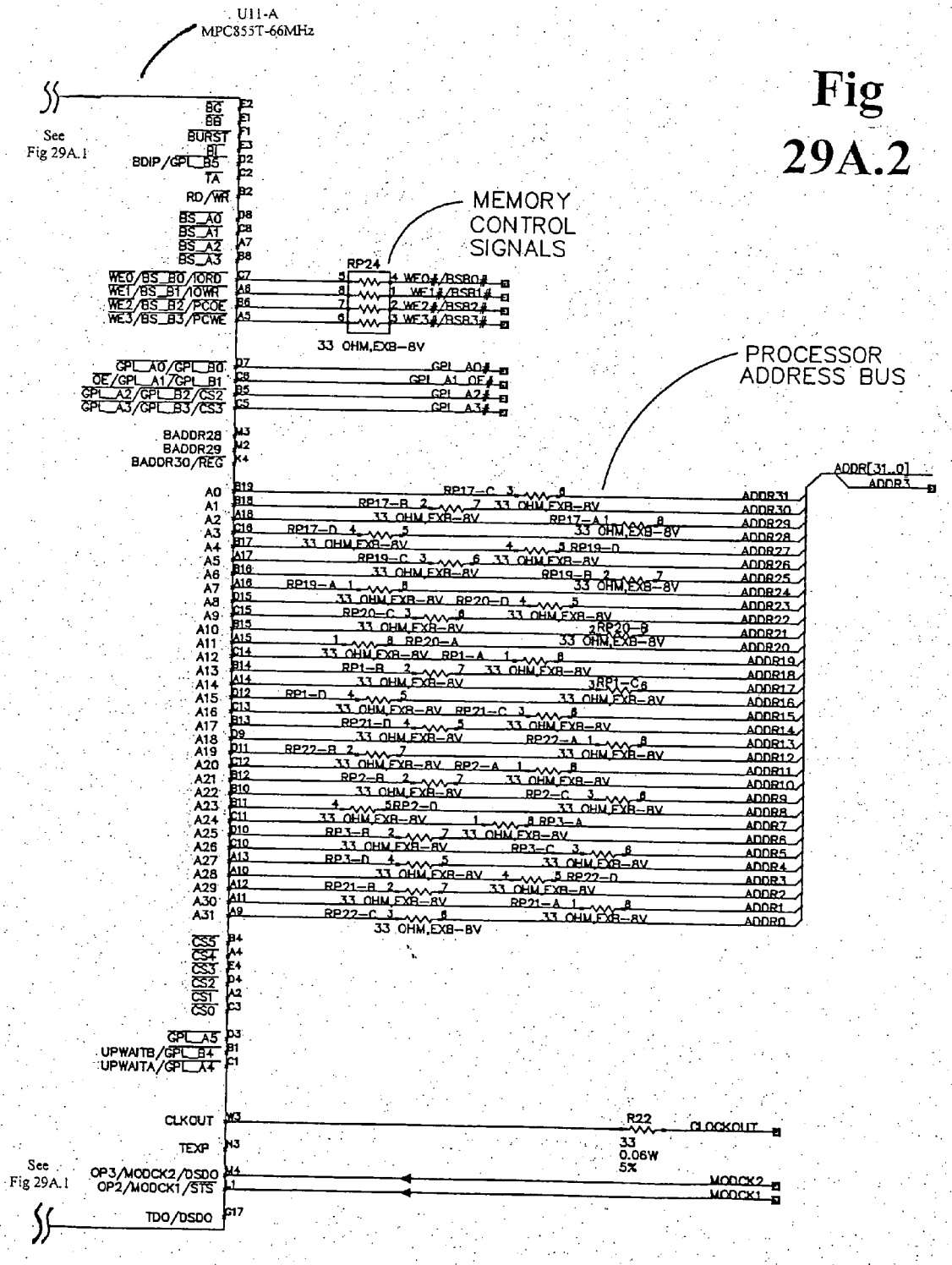
U11-A
MPC855T-66MHz
See Fig 29A.1
MEMORY CONTROL SIGNALS
PROCESSOR ADDRESS BUS
RP24
33 OHM,EXB-8V
R22
33
0.06W
5%
CLOCKOUT
MODCK2
MODCK1
See Fig 29A.1

Fig 29A.2

Fig 29B.1

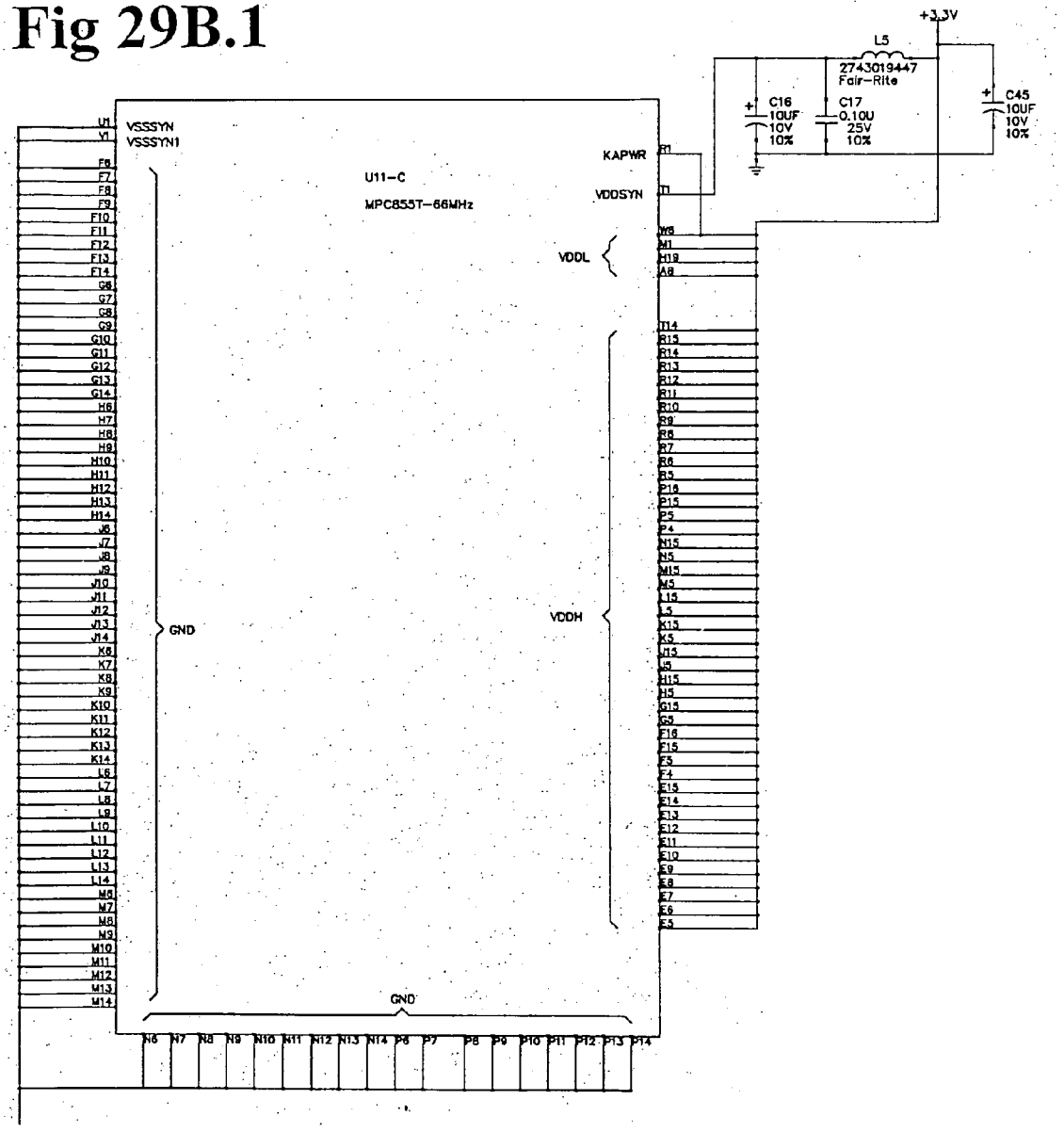
+3.3V
L5
2743019447
Fair-Rite
C16
10UF
10V
10%
C17
0.10U
25V
10%
C45
10UF
10V
10%
U11-C
MPC855T-66MHz
VSSSYN
VSSSYN1
KAPWR
VDDSYN
VDDL
VDDH
GND
GND

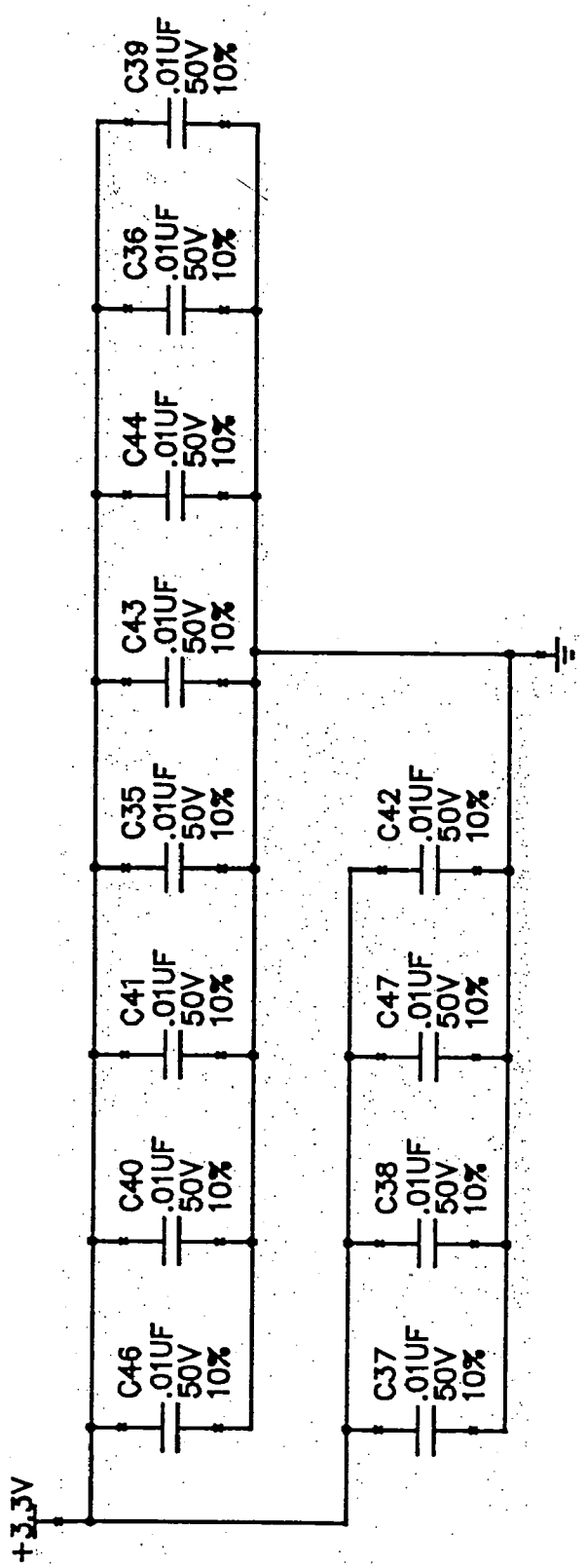
+3.3V
C46 .01UF 50V 10%
C40 .01UF 50V 10%
C41 .01UF 50V 10%
C35 .01UF 50V 10%
C43 .01UF 50V 10%
C44 .01UF 50V 10%
C36 .01UF 50V 10%
C39 .01UF 50V 10%
C37 .01UF 50V 10%
C38 .01UF 50V 10%
C47 .01UF 50V 10%
C42 .01UF 50V 10%

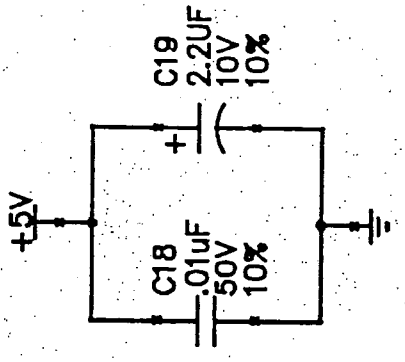
+5V
C18 .01uF 50V 10%
C19 2.2UF 10V 10%

Fig 29B.2

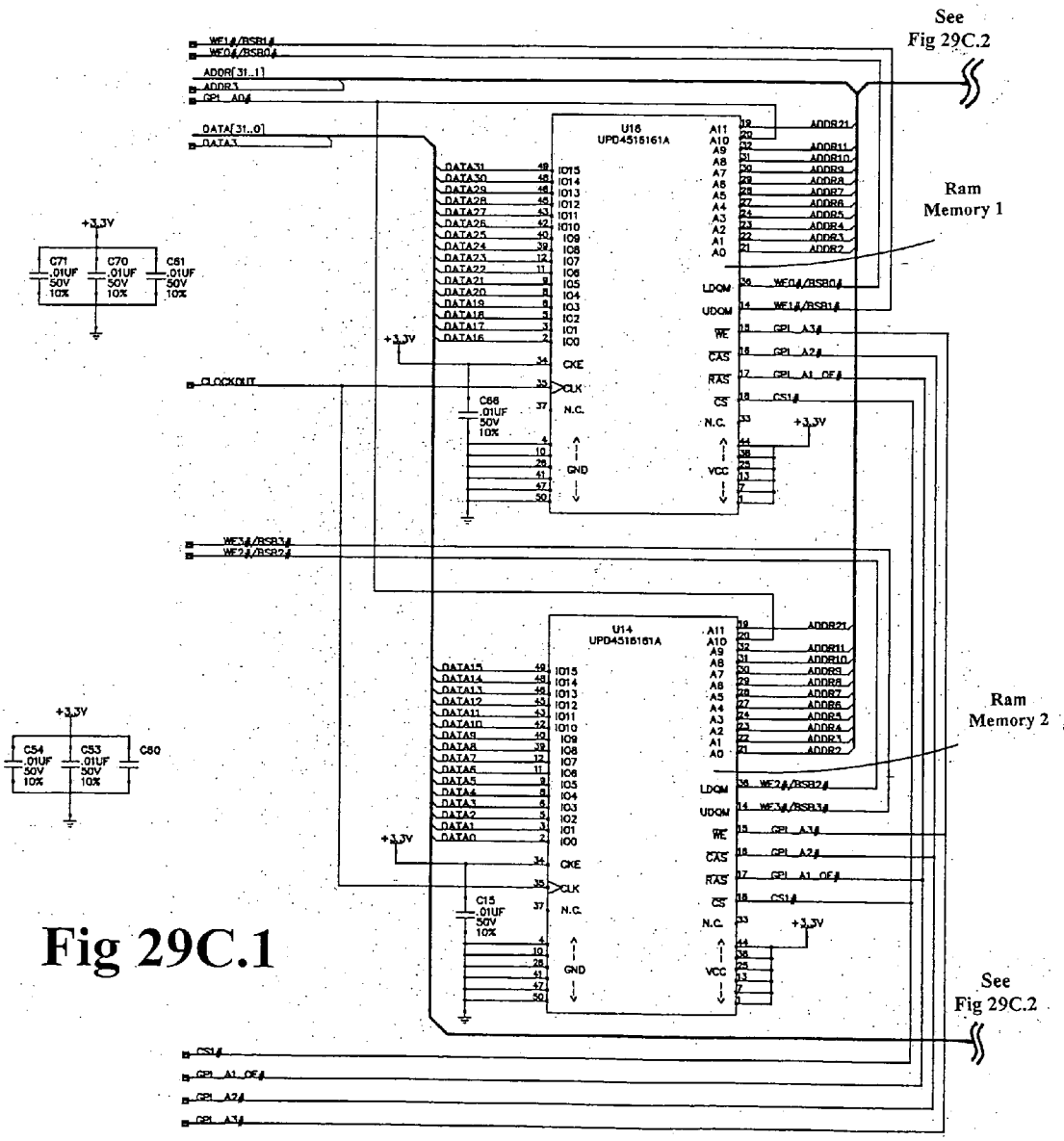
See
Fig 29C.2
Ram
Memory 1
Ram
Memory 2
See
Fig 29C.2
U16
UPD4516161A
U14
UPD4516161A
+3.3V
C71
.01UF
50V
10%
C70
.01UF
50V
10%
C61
.01UF
50V
10%
C66
.01UF
50V
10%
C54
.01UF
50V
10%
C53
.01UF
50V
10%
C60
C15
.01UF
50V
10%
CLOCKOUT
DATA[31..0]
ADDR[31..1]
GPI_A0
GPI_A1_OE
GPI_A2
GPI_A3
CS1
N.C.
GND
VCC
CKE
CLK
LDQM
UDQM
WE
CAS
RAS
CS

Fig 29C.1

Fig 29C.2

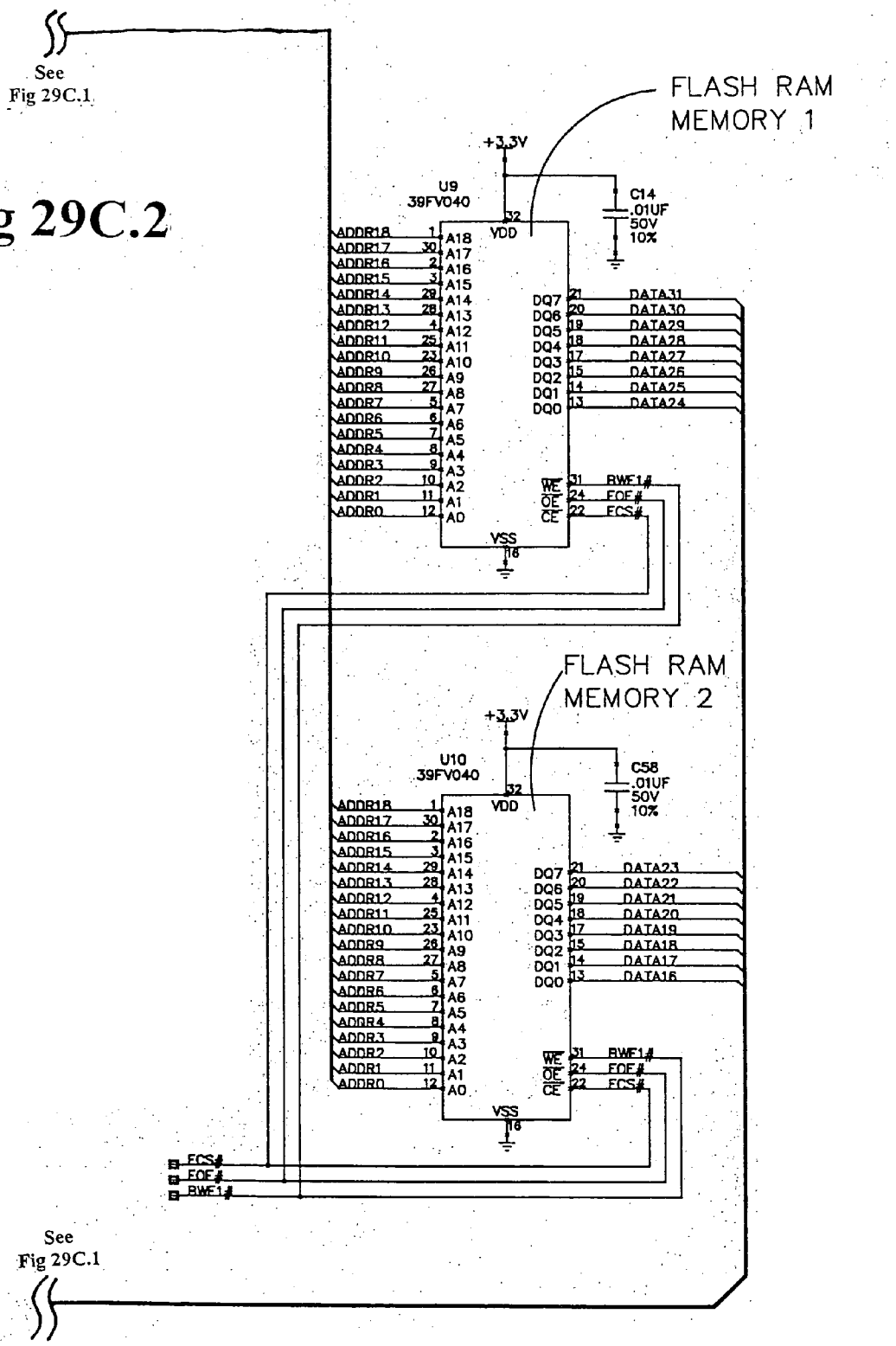
See
Fig 29C.1
FLASH RAM
MEMORY 1
+3.3V
U9
39FV040
C14
.01UF
50V
10%
VDD
VSS
ADDR18
ADDR17
ADDR16
ADDR15
ADDR14
ADDR13
ADDR12
ADDR11
ADDR10
ADDR9
ADDR8
ADDR7
ADDR6
ADDR5
ADDR4
ADDR3
ADDR2
ADDR1
ADDR0
A18
A17
A16
A15
A14
A13
A12
A11
A10
A9
A8
A7
A6
A5
A4
A3
A2
A1
A0
DQ7
DQ6
DQ5
DQ4
DQ3
DQ2
DQ1
DQ0
DATA31
DATA30
DATA29
DATA28
DATA27
DATA26
DATA25
DATA24
WE
OE
CE
BWE1#
FOE#
FCS#
FLASH RAM
MEMORY 2
U10
39FV040
C58
.01UF
50V
10%
DATA23
DATA22
DATA21
DATA20
DATA19
DATA18
DATA17
DATA16
See
Fig 29C.1

Fig 29D.1

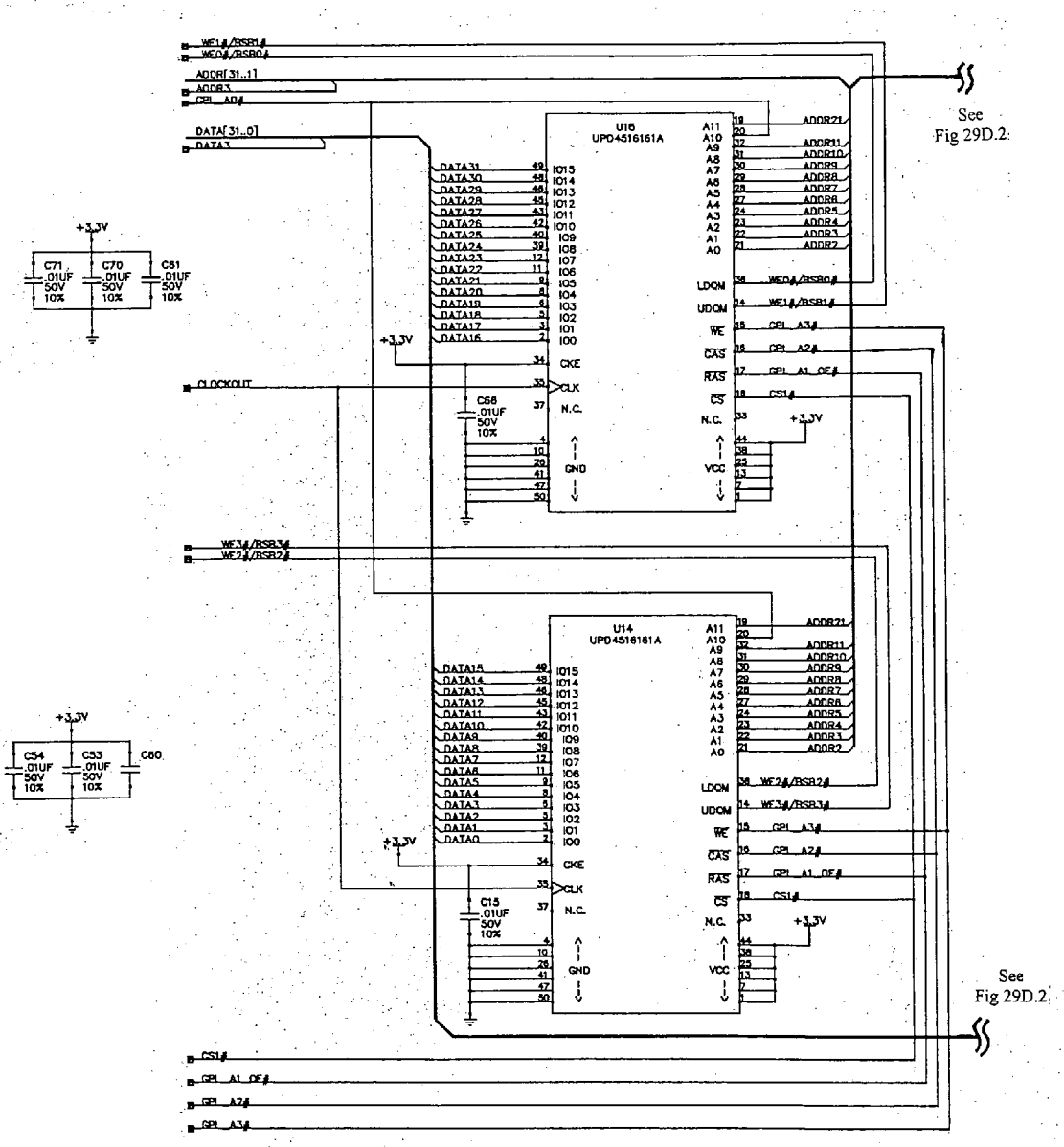
U16
UPD4516161A
U14
UPD4516161A
See Fig 29D.2
See Fig 29D.2
+3.3V
C71 .01UF 50V 10%
C70 .01UF 50V 10%
C81 .01UF 50V 10%
C68 .01UF 50V 10%
C54 .01UF 50V 10%
C53 .01UF 50V 10%
C80
C15 .01UF 50V 10%
CLOCKOUT
ADDR[31..1]
DATA[31..0]
GND
VCC
N.C.
CKE
CLK
LDQM
UDQM
CAS
RAS
CS

Fig 29D.2

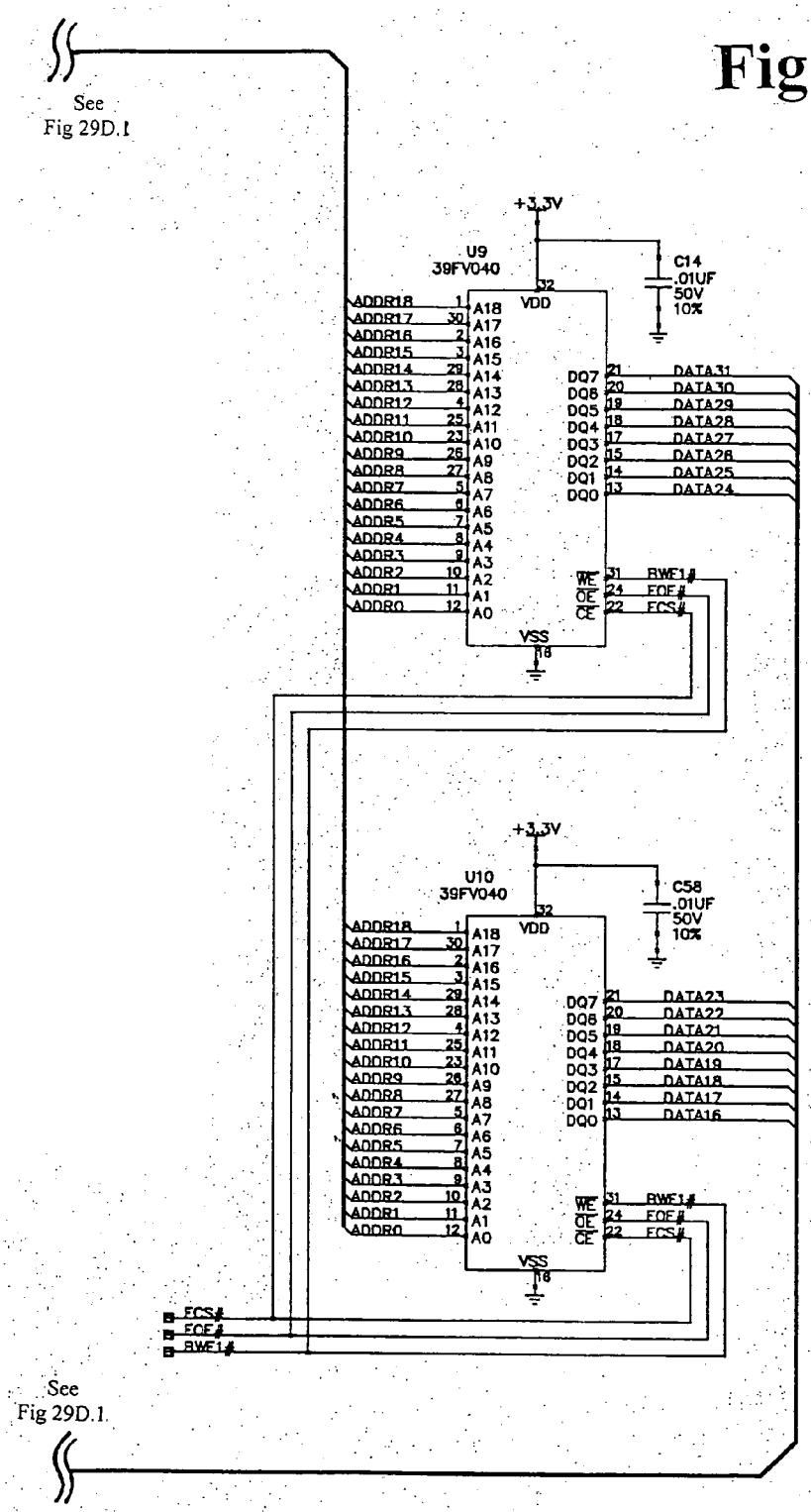
See
Fig 29D.1
+3.3V
U9
39FV040
C14
.01UF
50V
10%
VDD
VSS
ADDR18
ADDR17
ADDR16
ADDR15
ADDR14
ADDR13
ADDR12
ADDR11
ADDR10
ADDR9
ADDR8
ADDR7
ADDR6
ADDR5
ADDR4
ADDR3
ADDR2
ADDR1
ADDR0
A18
A17
A16
A15
A14
A13
A12
A11
A10
A9
A8
A7
A6
A5
A4
A3
A2
A1
A0
DQ7
DQ6
DQ5
DQ4
DQ3
DQ2
DQ1
DQ0
DATA31
DATA30
DATA29
DATA28
DATA27
DATA26
DATA25
DATA24
WE
OE
CE
BWE1#
FOE#
FCS#
+3.3V
U10
39FV040
C58
.01UF
50V
10%
DATA23
DATA22
DATA21
DATA20
DATA19
DATA18
DATA17
DATA16
FCS#
FOE#
BWE1#
See
Fig 29D.1.

Fig 30.1

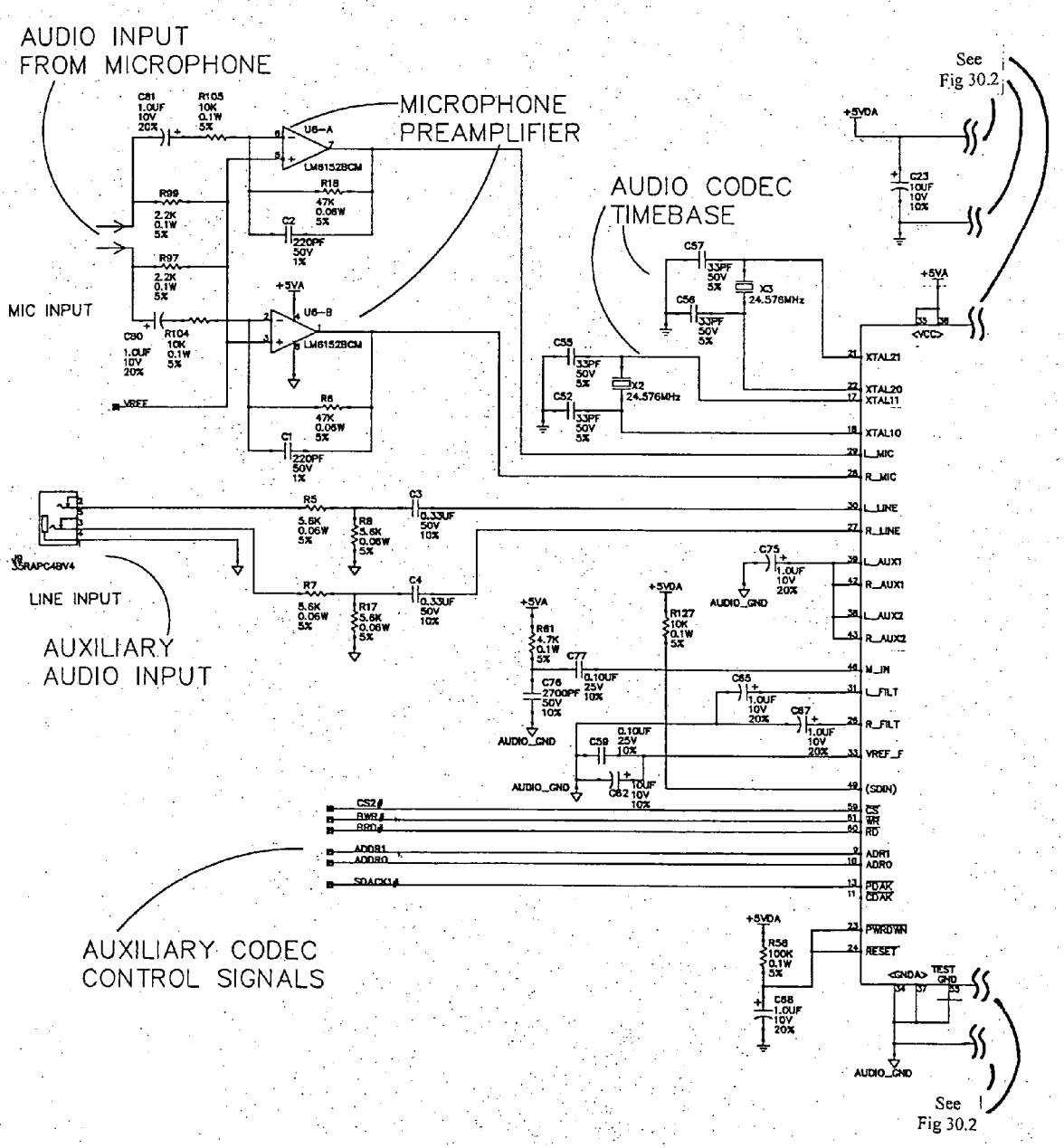
AUDIO INPUT
FROM MICROPHONE
MICROPHONE
PREAMPLIFIER
AUDIO CODEC
TIMEBASE
See
Fig 30.2
MIC INPUT
LINE INPUT
AUXILIARY
AUDIO INPUT
AUXILIARY CODEC
CONTROL SIGNALS
+5VDA
+5VA
AUDIO_GND
XTAL21
XTAL20
XTAL11
XTAL10
L_MIC
R_MIC
L_LINE
R_LINE
L_AUX1
R_AUX1
L_AUX2
R_AUX2
M_IN
L_FILT
R_FILT
VREF_F
(SDIN)
CS
WR
RD
ADR1
ADR0
PDAK
CDAK
PWRDWN
RESET
TEST
GND
See
Fig 30.2

Fig 30.2

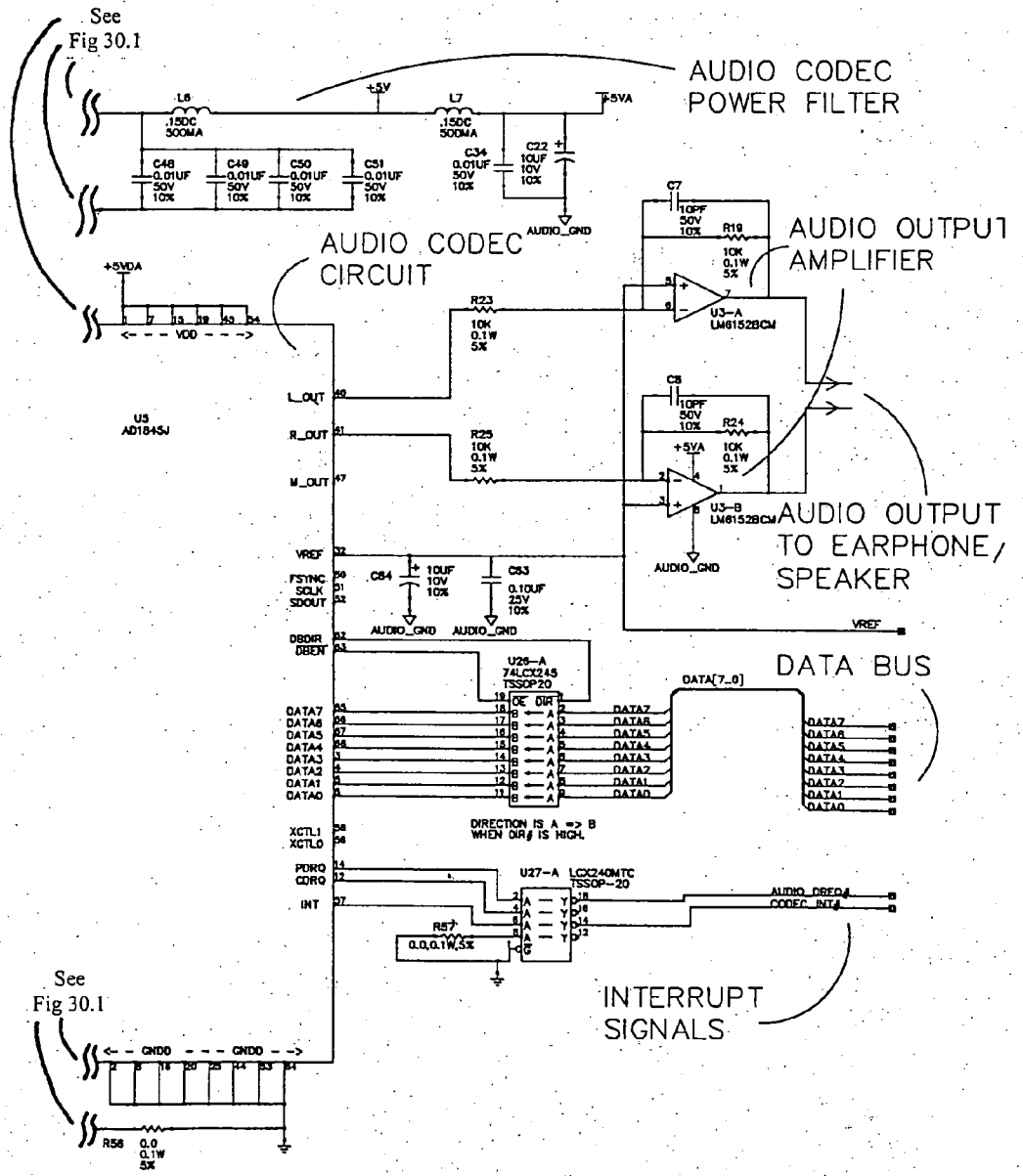
See Fig 30.1
AUDIO CODEC POWER FILTER
AUDIO CODEC CIRCUIT
AUDIO OUTPUT AMPLIFIER
AUDIO OUTPUT TO EARPHONE/ SPEAKER
DATA BUS
INTERRUPT SIGNALS
See Fig 30.1
+5V
+5VA
+5VDA
AUDIO_GND
VREF
L_OUT
R_OUT
M_OUT
FSYNC
SCLK
SDOUT
DBDIR
DBEN
XCTL1
XCTL0
PDRQ
CDRQ
INT
DATA[7..0]
U3 AD1845J
U25-A 74LCX245 TSSOP20
U27-A LCX240MTC TSSOP-20
U3-A LM6152BCM
U3-B LM6152BCM
DIRECTION IS A => B WHEN DIR# IS HIGH
AUDIO_DREQ#
CODEC_INT#

Fig 31A.1

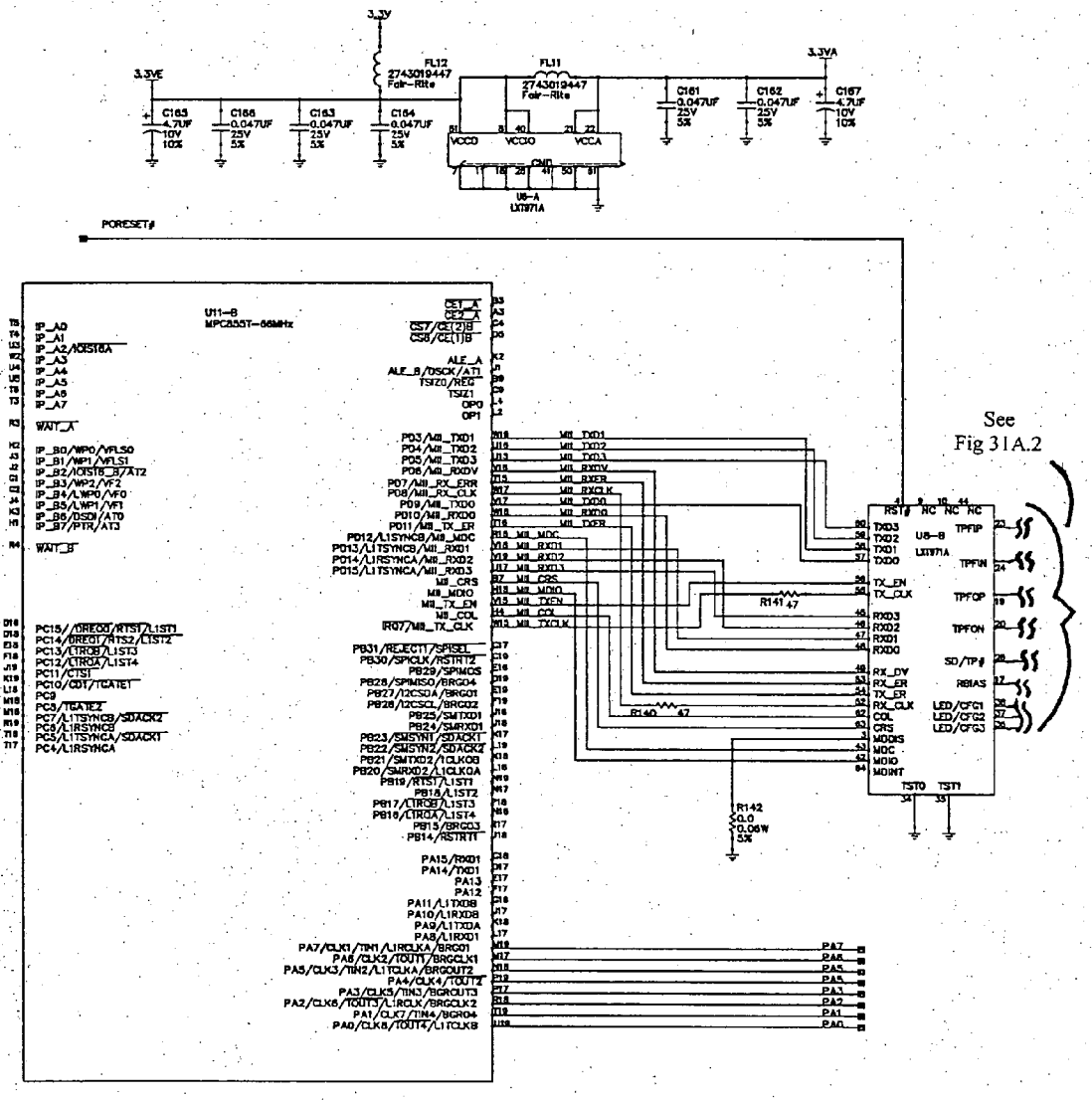
3.3V
3.3VE
3.3VA
FL12
FL11
2743019447
Fair-Rite
C165
C166
C163
C164
C161
C162
C167
VCCD
VCCIO
VCCA
GND
U6-A
LXT971A
PORESET#
U11-B
MPC855T-66MHz
See
Fig 31A.2
R141 47
R140 47
R142
0.0
0.06W
5%
RST#
TXD3
TXD2
TXD1
TXD0
TX_EN
TX_CLK
RXD3
RXD2
RXD1
RXD0
RX_DV
RX_ER
TX_ER
RX_CLK
COL
CRS
MDDIS
MDC
MDIO
MDINT
TSTO
TSTI
TPFIP
TPFIN
TPFOP
TPFON
SD/TPI
RBIAS
LED/CFG1
LED/CFG2
LED/CFG3

Fig 31A.2

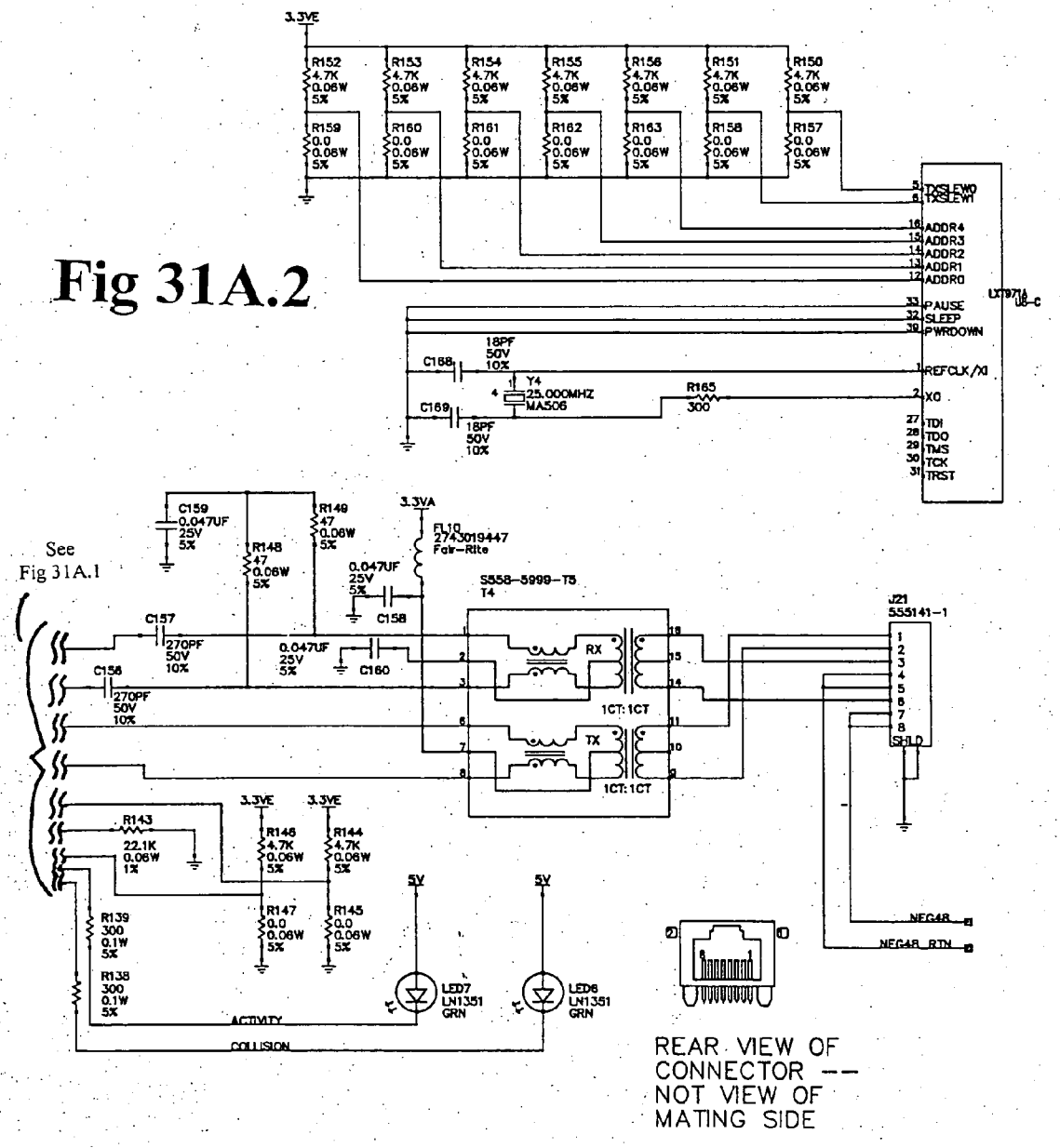
3.3VE
R152 4.7K 0.06W 5%
R153 4.7K 0.06W 5%
R154 4.7K 0.06W 5%
R155 4.7K 0.06W 5%
R156 4.7K 0.06W 5%
R151 4.7K 0.06W 5%
R150 4.7K 0.06W 5%
R159 0.0 0.06W 5%
R160 0.0 0.06W 5%
R161 0.0 0.06W 5%
R162 0.0 0.06W 5%
R163 0.0 0.06W 5%
R158 0.0 0.06W 5%
R157 0.0 0.06W 5%
TXSLEW0
TXSLEW1
ADDR4
ADDR3
ADDR2
ADDR1
ADDR0
PAUSE
SLEEP
PWRDOWN
LXT971A
U8-C
C168 18PF 50V 10%
Y4 25.000MHZ MA506
C169 18PF 50V 10%
R165 300
REFCLK/XI
XO
TDI
TDO
TMS
TCK
TRST
See Fig 31A.1
C159 0.047UF 25V 5%
R148 47 0.06W 5%
R149 47 0.06W 5%
3.3VA
FL10 2743019447 Fair-Rite
0.047UF 25V 5%
C158
S558-5999-T5 T4
C157 270PF 50V 10%
C156 270PF 50V 10%
0.047UF 25V 5%
C160
RX
TX
1CT:1CT
1CT:1CT
J21 555141-1
SHLD
R143 22.1K 0.06W 1%
3.3VE
3.3VE
R146 4.7K 0.06W 5%
R144 4.7K 0.06W 5%
R139 300 0.1W 5%
R138 300 0.1W 5%
R147 0.0 0.06W 5%
R145 0.0 0.06W 5%
5V
5V
LED7 LN1351 GRN
LED6 LN1351 GRN
ACTIVITY
COLLISION
NEG48
NEG48_RTN
REAR VIEW OF CONNECTOR -- NOT VIEW OF MATING SIDE

Fig 31B.1

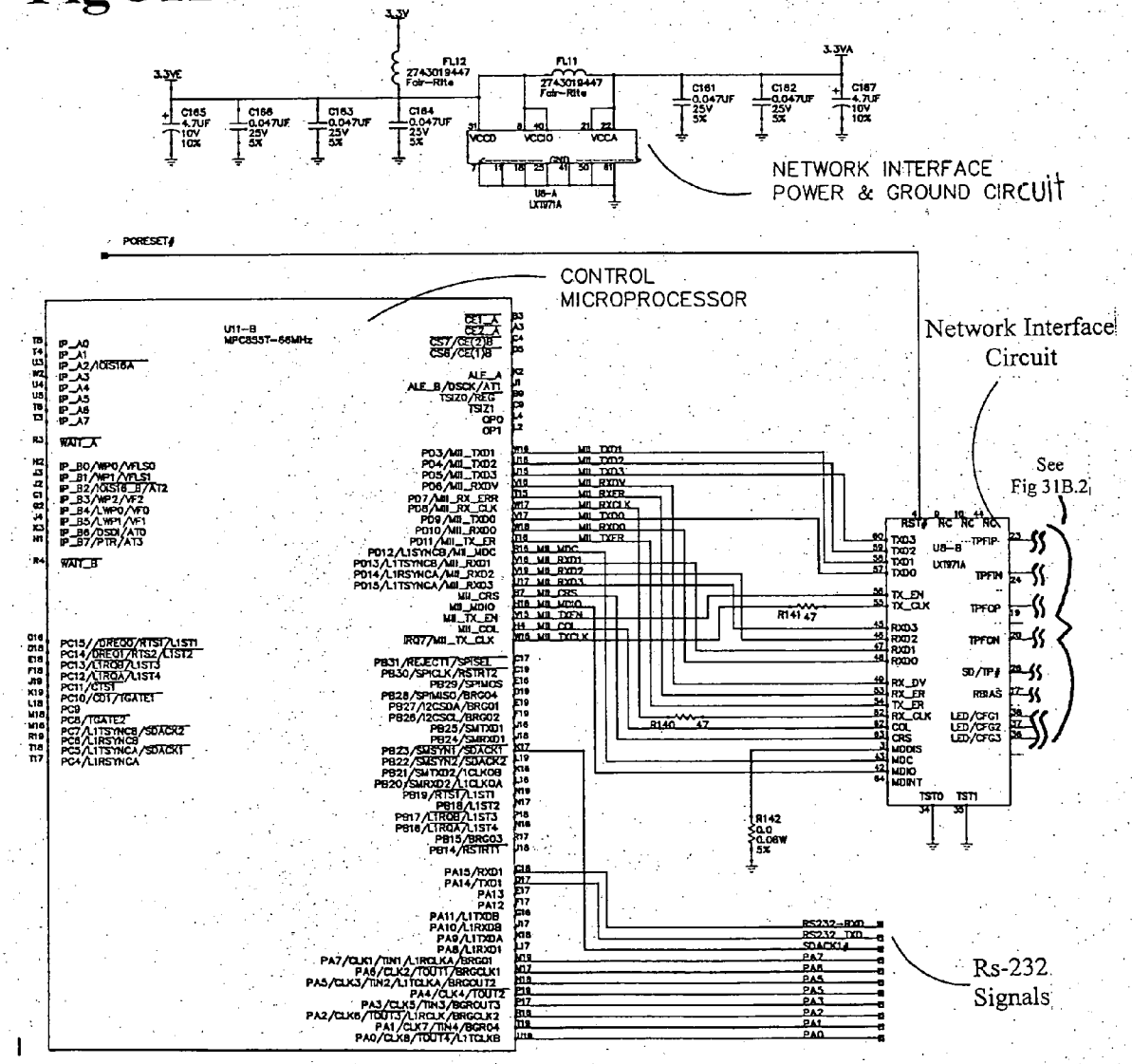
NETWORK INTERFACE
POWER & GROUND CIRCUIT
CONTROL
MICROPROCESSOR
Network Interface
Circuit
See
Fig 31B.2
Rs-232
Signals

Fig 31B.2

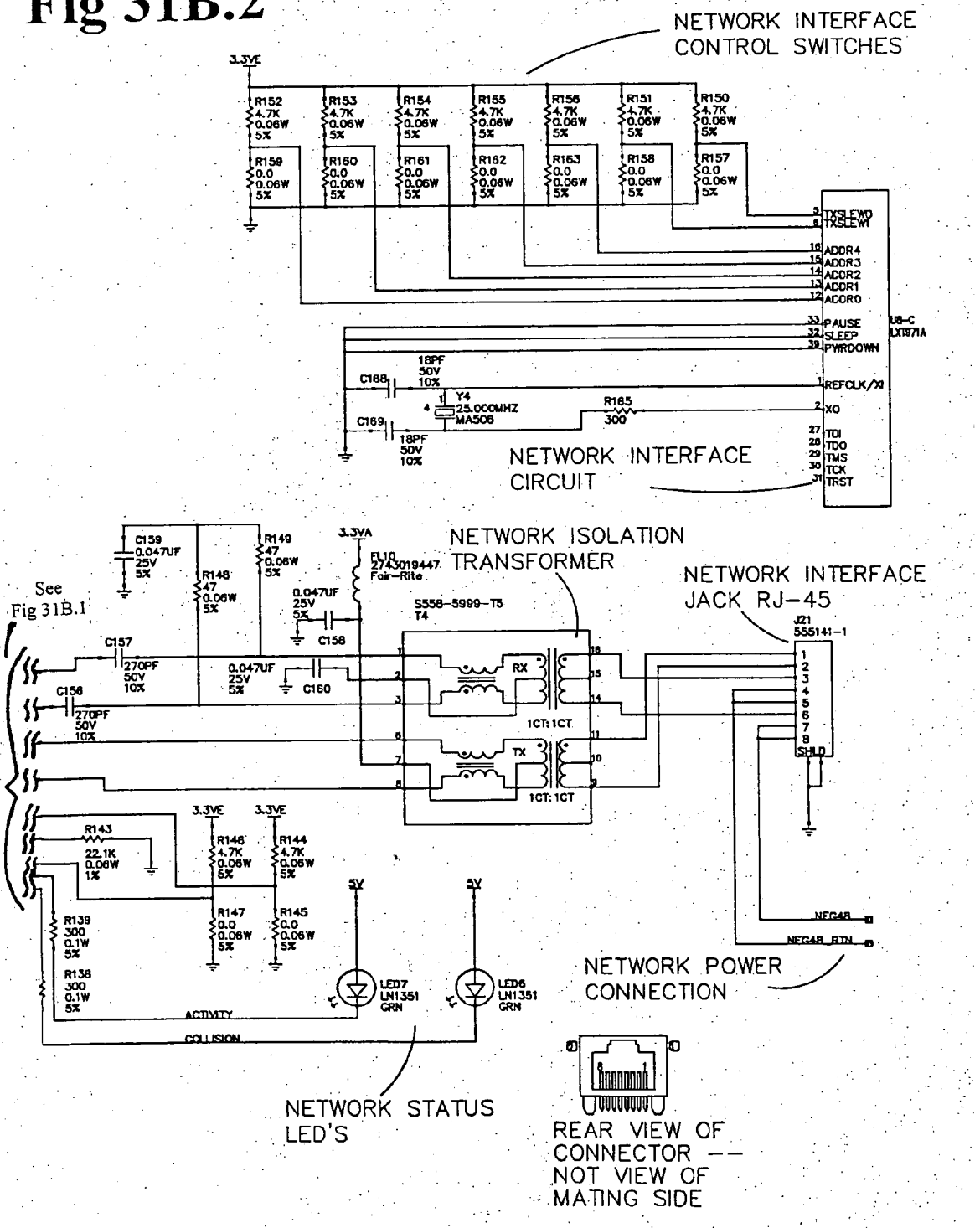
NETWORK INTERFACE CONTROL SWITCHES
3.3VE
R152 4.7K 0.06W 5%
R153 4.7K 0.06W 5%
R154 4.7K 0.06W 5%
R155 4.7K 0.06W 5%
R156 4.7K 0.06W 5%
R151 4.7K 0.06W 5%
R150 4.7K 0.06W 5%
R159 0.0 0.06W 5%
R160 0.0 0.06W 5%
R161 0.0 0.06W 5%
R162 0.0 0.06W 5%
R163 0.0 0.06W 5%
R158 0.0 0.06W 5%
R157 0.0 0.06W 5%
TXSLEWD
TXSLEWI
ADDR4
ADDR3
ADDR2
ADDR1
ADDR0
PAUSE
SLEEP
PWRDOWN
U8-C LXT971A
C168 18PF 50V 10%
Y4 25.000MHZ MA506
R165 300
C169 18PF 50V 10%
REFCLK/XI
XO
TDI
TDO
TMS
TCK
TRST
NETWORK INTERFACE CIRCUIT
C159 0.047UF 25V 5%
R148 47 0.06W 5%
R149 47 0.06W 5%
3.3VA
FL10 2743019447 Fair-Rite
NETWORK ISOLATION TRANSFORMER
NETWORK INTERFACE JACK RJ-45
See Fig 31B.1
0.047UF 25V 5%
C158
S558-5999-T5 T4
C157 270PF 50V 10%
0.047UF 25V 5%
C160
C156 270PF 50V 10%
RX
TX
1CT:1CT
1CT:1CT
J21 555141-1
SHLD
3.3VE
3.3VE
R143 22.1K 0.06W 1%
R146 4.7K 0.06W 5%
R144 4.7K 0.06W 5%
R147 0.0 0.06W 5%
R145 0.0 0.06W 5%
5V
5V
R139 300 0.1W 5%
R138 300 0.1W 5%
LED7 LN1351 GRN
LED6 LN1351 GRN
ACTIVITY
COLLISION
NEG48
NEG48_RTN
NETWORK POWER CONNECTION
NETWORK STATUS LED'S
REAR VIEW OF CONNECTOR -- NOT VIEW OF MATING SIDE

Fig 31C.1

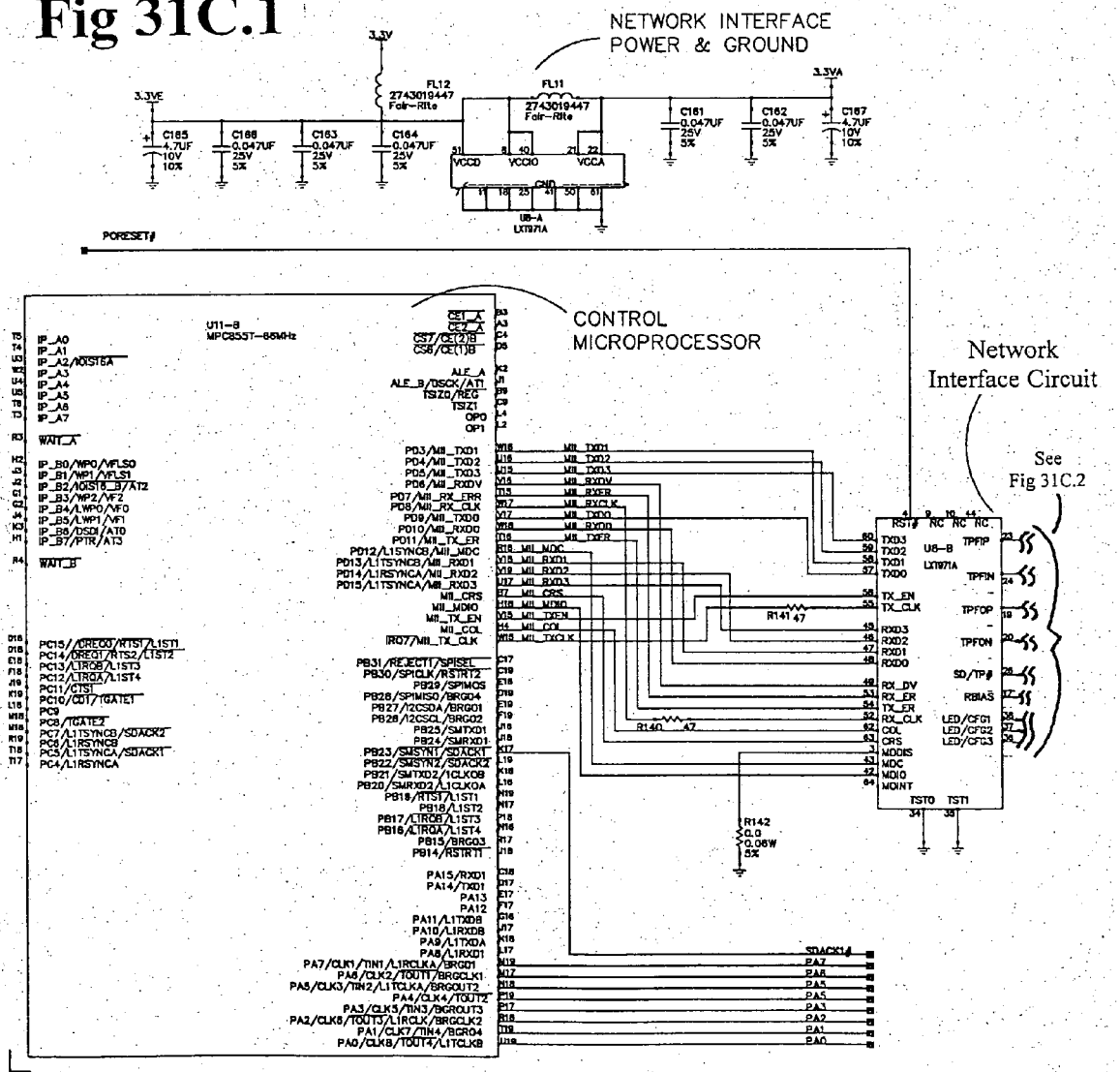
NETWORK INTERFACE
POWER & GROUND
CONTROL
MICROPROCESSOR
Network
Interface Circuit
See
Fig 31C.2
3.3V
3.3VA
FL12
FL11
2743019447
Fair-Rite
C165
C166
C163
C164
C161
C162
C167
VCCD
VCCIO
VCCA
GND
U8-A
LXT971A
PORESET#
U11-B
MPC855T-66MHz
IP_A0
IP_A1
IP_A2/IOIST6A
IP_A3
IP_A4
IP_A5
IP_A6
IP_A7
WAIT_A
IP_B0/WP0/VFLS0
IP_B1/WP1/VFLS1
IP_B2/IOIST6_B/AT2
IP_B3/WP2/VF2
IP_B4/LWP0/VF0
IP_B5/LWP1/VF1
IP_B6/DSDI/AT0
IP_B7/PTR/AT3
WAIT_B
PC15/CREQ0/RTS1/L1ST1
PC14/CREQ1/RTS2/L1ST2
PC13/L1RQB/L1ST3
PC12/L1RQA/L1ST4
PC11/CTS1
PC10/CD1/TGATE1
PC9
PC8/TGATE2
PC7/L1TSYNCB/SDACK2
PC6/L1RSYNCB
PC5/L1TSYNCA/SDACK1
PC4/L1RSYNCA
CE1_A
CE2_A
CS7/CE(2)B
CS6/CE(1)B
ALE_A
ALE_B/DSCK/AT1
TSIZ0/REG
TSIZ1
OP0
OP1
PD3/MII_TXD1
PD4/MII_TXD2
PD5/MII_TXD3
PD6/MII_RXDV
PD7/MII_RX_ERR
PD8/MII_RX_CLK
PD9/MII_TXD0
PD10/MII_RXD0
PD11/MII_TX_ER
PD12/L1SYNCB/MII_MDC
PD13/L1TSYNCB/MII_RXD1
PD14/L1RSYNCA/MII_RXD2
PD15/L1TSYNCA/MII_RXD3
MII_CRS
MII_MDIO
MII_TX_EN
MII_COL
IRQ7/MII_TX_CLK
PB31/REJECT1/SPISEL
PB30/SPICLK/RSTRT2
PB29/SPIMOSI
PB28/SPIMISO/BRGO4
PB27/I2CSDA/BRGO1
PB26/I2CSCL/BRGO2
PB25/SMTXD1
PB24/SMRXD1
PB23/SMSYN1/SDXCKT
PB22/SMSYN2/SDACK2
PB21/SMTXD2/1CLK08
PB20/SMRXD2/L1CLK0A
PB19/RTS1/L1ST1
PB18/L1ST2
PB17/L1RQB/L1ST3
PB16/L1RQA/L1ST4
PB15/BRG03
PB14/RSTRT1
PA15/RXD1
PA14/TXD1
PA13
PA12
PA11/L1TXD8
PA10/L1RXD8
PA9/L1TXDA
PA8/L1RXD1
PA7/CLK1/TIN1/L1RCLKA/BRGO1
PA6/CLK2/TOUT1/BRGCLK1
PA5/CLK3/TIN2/L1TCLKA/BRGOUT2
PA4/CLK4/TOUT2
PA3/CLK5/TIN3/BGROUT3
PA2/CLK6/TOUT3/L1RCLK/BRGCLK2
PA1/CLK7/TIN4/BGRO4
PA0/CLK8/TOUT4/L1TCLK8
R141 47
R140 47
R142 0.0 0.06W 5%
U8-B
LXT971A
RST#
NC
TXD3
TXD2
TXD1
TXD0
TX_EN
TX_CLK
RXD3
RXD2
RXD1
RXD0
RX_DV
RX_ER
RX_CLK
COL
CRS
MDDIS
MDC
MDIO
MDINT
TST0
TST1
TPFIP
TPFIN
TPFOP
TPFON
SD/TP#
RBIAS
LED/CFG1
LED/CFG2
LED/CFG3

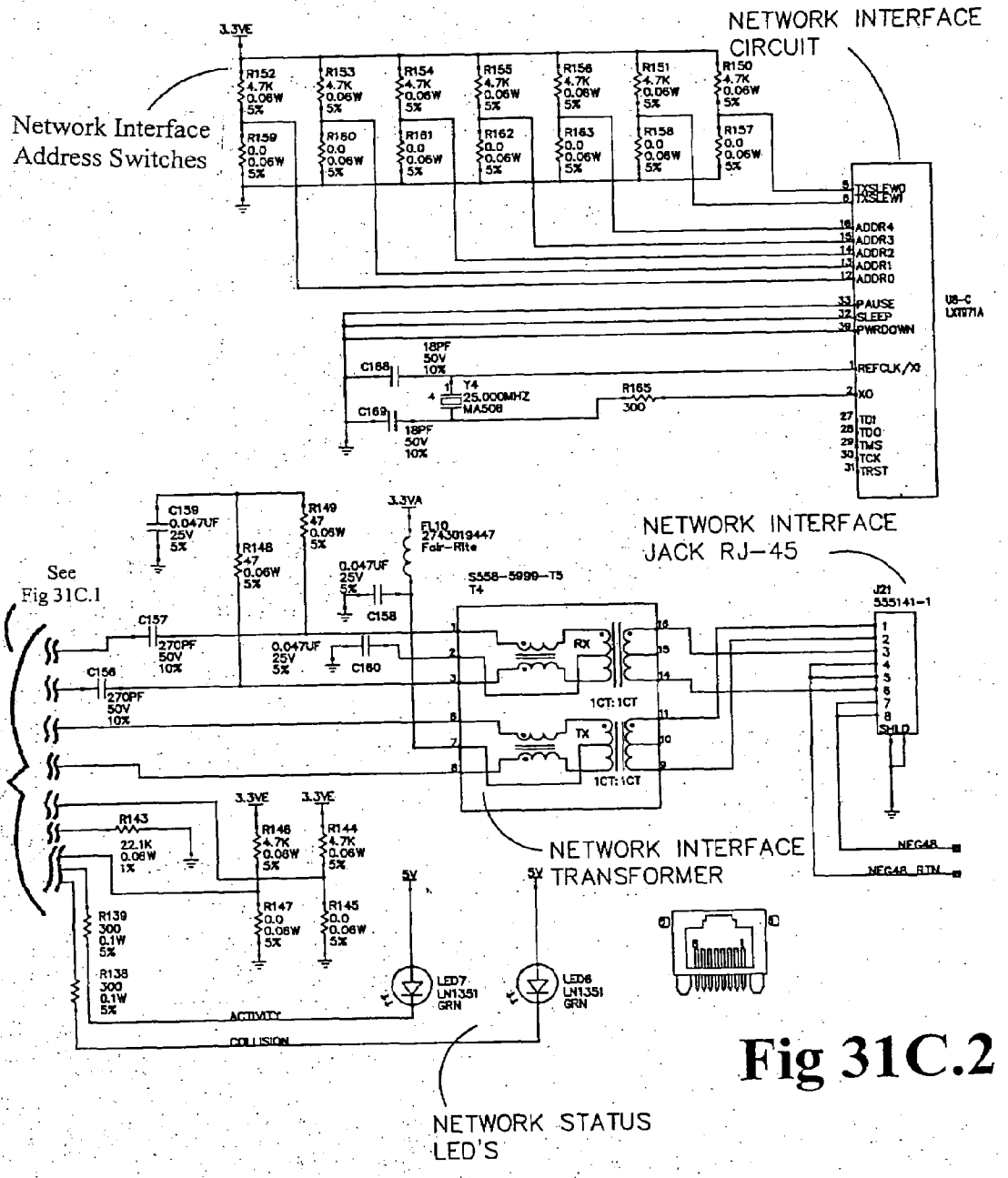
NETWORK INTERFACE CIRCUIT
Network Interface Address Switches
3.3VE
R152 4.7K 0.06W 5%
R153 4.7K 0.06W 5%
R154 4.7K 0.06W 5%
R155 4.7K 0.06W 5%
R156 4.7K 0.06W 5%
R151 4.7K 0.06W 5%
R150 4.7K 0.06W 5%
R159 0.0 0.06W 5%
R160 0.0 0.06W 5%
R161 0.0 0.06W 5%
R162 0.0 0.06W 5%
R163 0.0 0.06W 5%
R158 0.0 0.06W 5%
R157 0.0 0.06W 5%
TXSLEWD
TXSLEWI
ADDR4
ADDR3
ADDR2
ADDR1
ADDR0
PAUSE
SLEEP
PWRDOWN
U8-C LXT971A
C168 18PF 50V 10%
Y4 25.000MHZ MA508
C169 18PF 50V 10%
R165 300
REFCLK/X1
XO
TDI
TDO
TMS
TCK
TRST
NETWORK INTERFACE JACK RJ-45
J21 555141-1
C159 0.047UF 25V 5%
R149 47 0.06W 5%
R148 47 0.06W 5%
3.3VA
FL10 2743019447 Fdr-Rite
0.047UF 25V 5%
C158
5558-5999-T5 T4
See Fig 31C.1
C157 270PF 50V 10%
C156 270PF 50V 10%
0.047UF 25V 5%
C160
RX
TX
1CT:1CT
1CT:1CT
SHLD
NEG48
NEG48_RTN
NETWORK INTERFACE TRANSFORMER
3.3VE
3.3VE
R143 22.1K 0.06W 1%
R146 4.7K 0.06W 5%
R144 4.7K 0.06W 5%
R147 0.0 0.06W 5%
R145 0.0 0.06W 5%
R139 300 0.1W 5%
R138 300 0.1W 5%
5V
5V
LED7 LN1351 GRN
LED6 LN1351 GRN
ACTIVITY
COLLISION
NETWORK STATUS LED'S

Fig 31C.2

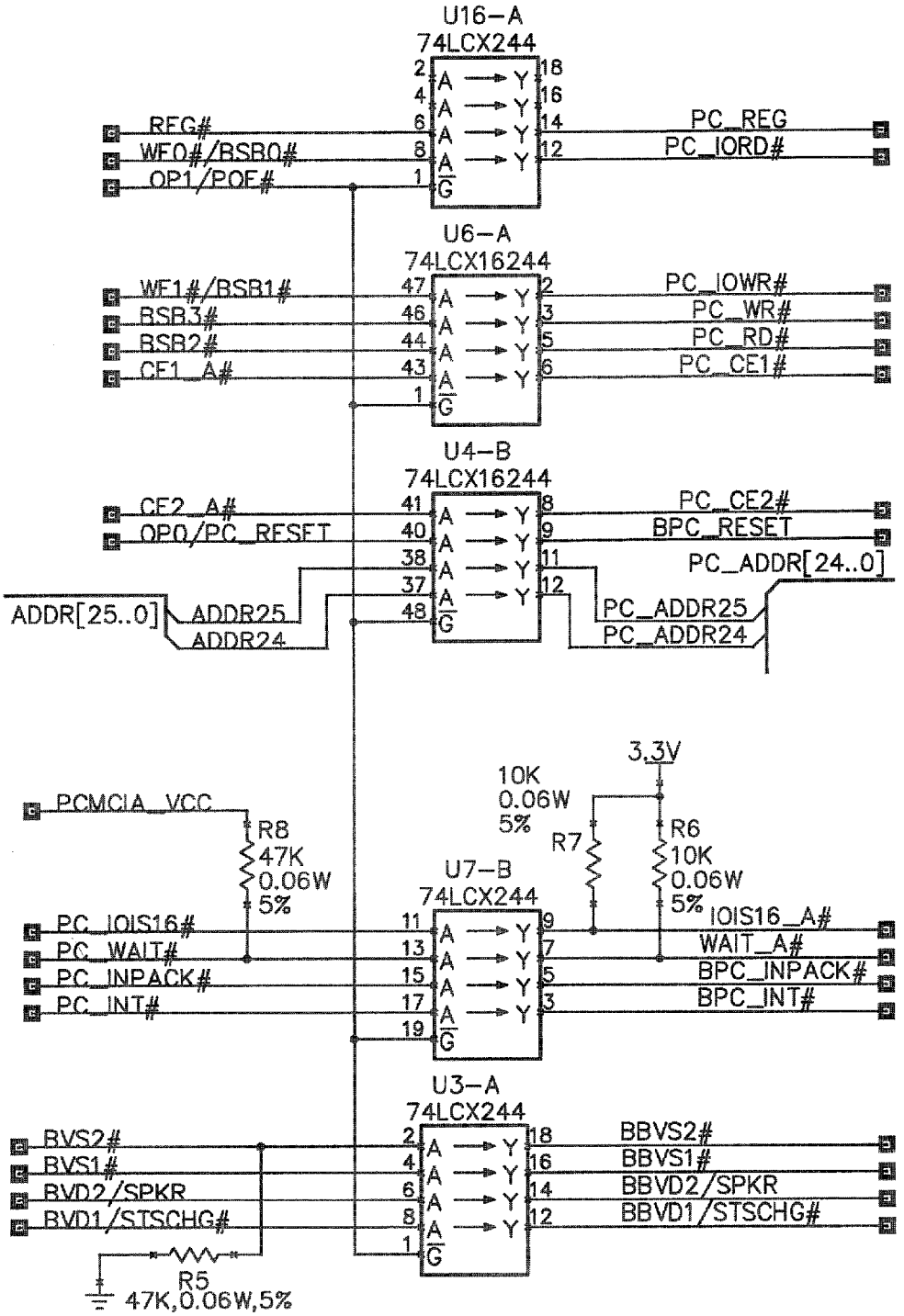
U16-A
74LCX244
REG#
WE0#/BSB0#
OP1/POE#
PC_REG
PC_IORD#
U6-A
74LCX16244
WE1#/BSB1#
BSB3#
BSB2#
CE1_A#
PC_IOWR#
PC_WR#
PC_RD#
PC_CE1#
U4-B
74LCX16244
CE2_A#
OP0/PC_RESET
ADDR[25..0]
ADDR25
ADDR24
PC_CE2#
BPC_RESET
PC_ADDR[24..0]
PC_ADDR25
PC_ADDR24
3.3V
10K
0.06W
5%
R7
R6
10K
0.06W
5%
PCMCIA_VCC
R8
47K
0.06W
5%
U7-B
74LCX244
PC_IOIS16#
PC_WAIT#
PC_INPACK#
PC_INT#
IOIS16_A#
WAIT_A#
BPC_INPACK#
BPC_INT#
U3-A
74LCX244
BVS2#
BVS1#
BVD2/SPKR
BVD1/STSCHG#
BBVS2#
BBVS1#
BBVD2/SPKR
BBVD1/STSCHG#
R5
47K,0.06W,5%

FIG. 32A

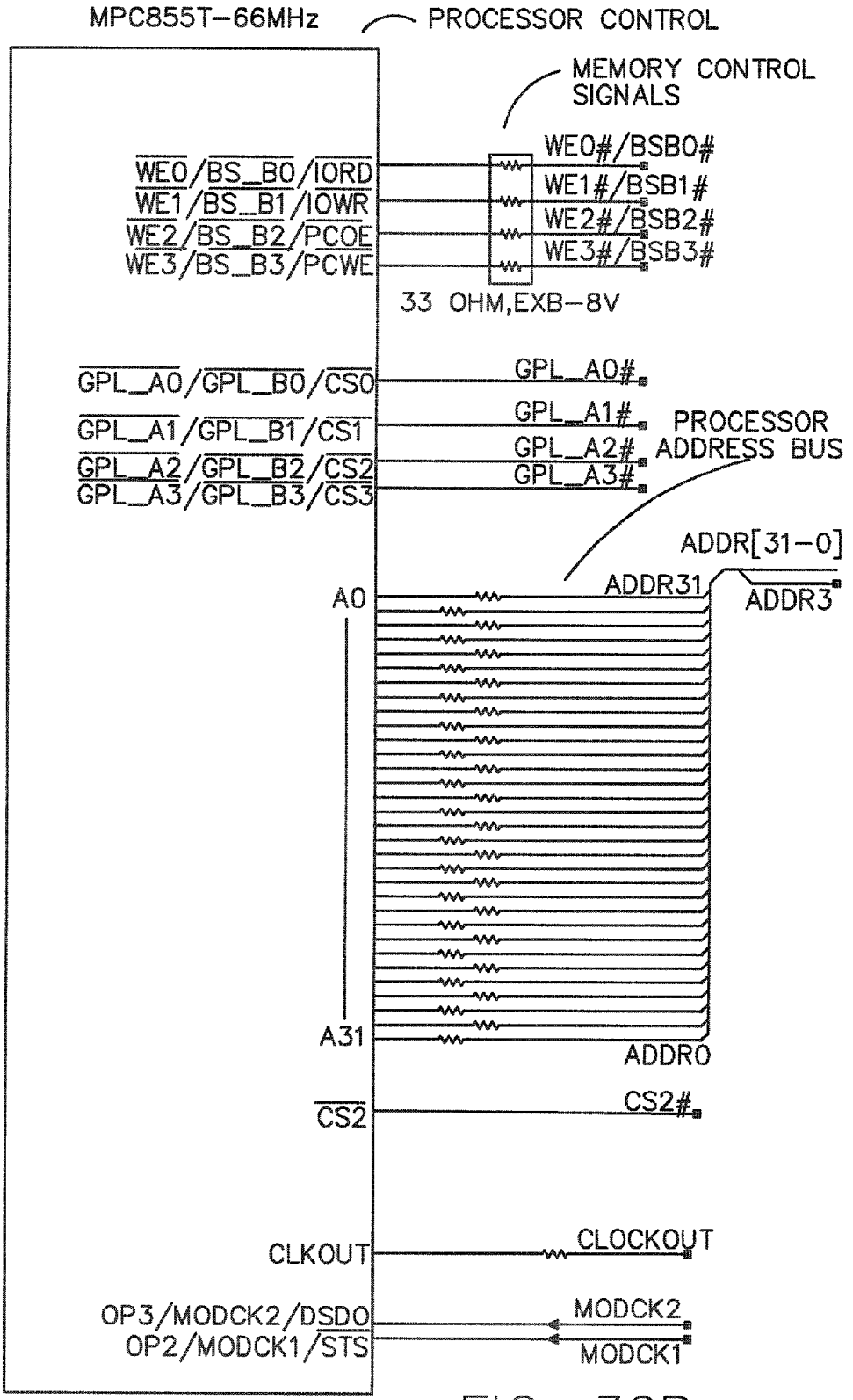
MPC855T-66MHz
PROCESSOR CONTROL
MEMORY CONTROL SIGNALS
WE0/BS_B0/IORD
WE1/BS_B1/IOWR
WE2/BS_B2/PCOE
WE3/BS_B3/PCWE
WE0#/BSB0#
WE1#/BSB1#
WE2#/BSB2#
WE3#/BSB3#
33 OHM,EXB-8V
GPL_A0/GPL_B0/CS0
GPL_A1/GPL_B1/CS1
GPL_A2/GPL_B2/CS2
GPL_A3/GPL_B3/CS3
GPL_A0#
GPL_A1#
GPL_A2#
GPL_A3#
PROCESSOR ADDRESS BUS
ADDR[31-0]
ADDR31
ADDR3
A0
A31
ADDR0
CS2
CS2#
CLKOUT
CLOCKOUT
OP3/MODCK2/DSDO
OP2/MODCK1/STS
MODCK2
MODCK1

FIG. 32B

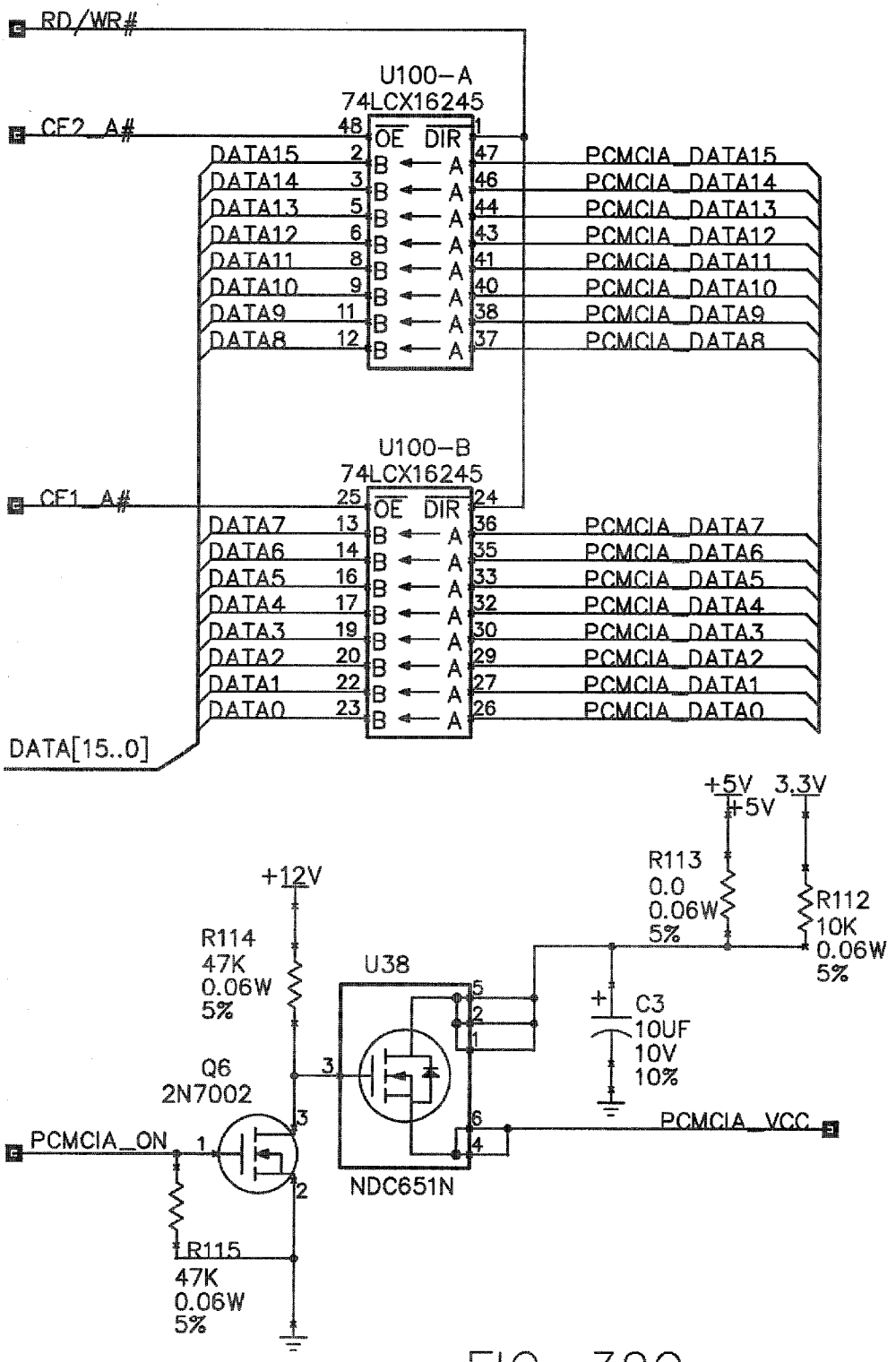
RD/WR#
U100-A
74LCX16245
CF2_A#
48
OE
DIR
1
DATA15 2 B A 47 PCMCIA_DATA15
DATA14 3 B A 46 PCMCIA_DATA14
DATA13 5 B A 44 PCMCIA_DATA13
DATA12 6 B A 43 PCMCIA_DATA12
DATA11 8 B A 41 PCMCIA_DATA11
DATA10 9 B A 40 PCMCIA_DATA10
DATA9 11 B A 38 PCMCIA_DATA9
DATA8 12 B A 37 PCMCIA_DATA8
U100-B
74LCX16245
CF1_A#
25
OE
DIR
24
DATA7 13 B A 36 PCMCIA_DATA7
DATA6 14 B A 35 PCMCIA_DATA6
DATA5 16 B A 33 PCMCIA_DATA5
DATA4 17 B A 32 PCMCIA_DATA4
DATA3 19 B A 30 PCMCIA_DATA3
DATA2 20 B A 29 PCMCIA_DATA2
DATA1 22 B A 27 PCMCIA_DATA1
DATA0 23 B A 26 PCMCIA_DATA0
DATA[15..0]
+5V
3.3V
+5V
R113
0.0
0.06W
5%
R112
10K
0.06W
5%
+12V
R114
47K
0.06W
5%
U38
C3
10UF
10V
10%
Q6
2N7002
PCMCIA_ON
PCMCIA_VCC
NDC651N
R115
47K
0.06W
5%

FIG. 32C

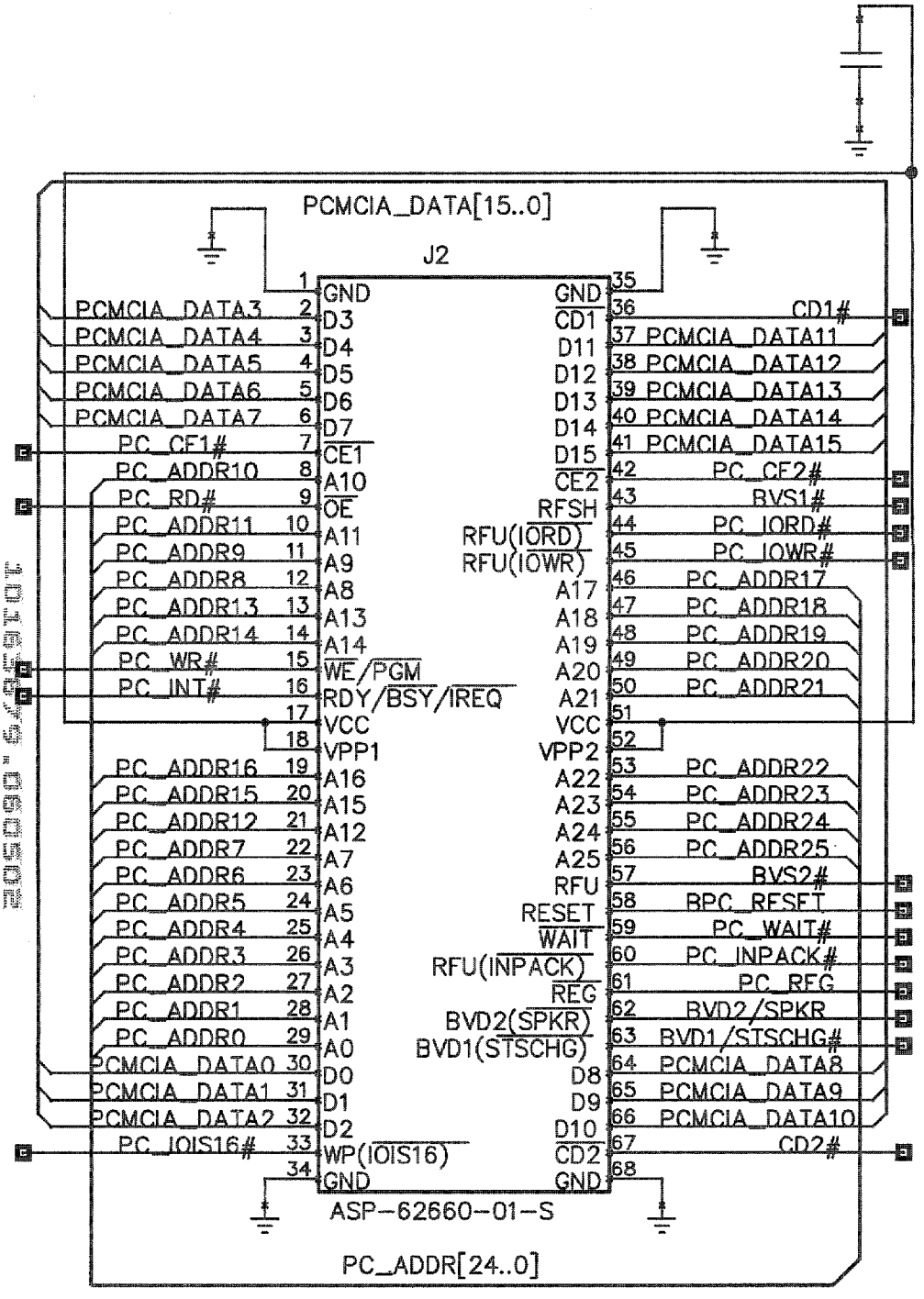
PCMCIA_DATA[15..0]
J2
1 GND
PCMCIA_DATA3 2 D3
PCMCIA_DATA4 3 D4
PCMCIA_DATA5 4 D5
PCMCIA_DATA6 5 D6
PCMCIA_DATA7 6 D7
PC_CE1# 7 CE1
PC_ADDR10 8 A10
PC_RD# 9 OE
PC_ADDR11 10 A11
PC_ADDR9 11 A9
PC_ADDR8 12 A8
PC_ADDR13 13 A13
PC_ADDR14 14 A14
PC_WR# 15 WE/PGM
PC_INT# 16 RDY/BSY/IREQ
17 VCC
18 VPP1
PC_ADDR16 19 A16
PC_ADDR15 20 A15
PC_ADDR12 21 A12
PC_ADDR7 22 A7
PC_ADDR6 23 A6
PC_ADDR5 24 A5
PC_ADDR4 25 A4
PC_ADDR3 26 A3
PC_ADDR2 27 A2
PC_ADDR1 28 A1
PC_ADDR0 29 A0
PCMCIA_DATA0 30 D0
PCMCIA_DATA1 31 D1
PCMCIA_DATA2 32 D2
PC_IOIS16# 33 WP(IOIS16)
34 GND
35 GND
36 CD1 CD1#
37 D11 PCMCIA_DATA11
38 D12 PCMCIA_DATA12
39 D13 PCMCIA_DATA13
40 D14 PCMCIA_DATA14
41 D15 PCMCIA_DATA15
42 CE2 PC_CE2#
43 RFSH BVS1#
44 RFU(IORD) PC_IORD#
45 RFU(IOWR) PC_IOWR#
46 A17 PC_ADDR17
47 A18 PC_ADDR18
48 A19 PC_ADDR19
49 A20 PC_ADDR20
50 A21 PC_ADDR21
51 VCC
52 VPP2
53 A22 PC_ADDR22
54 A23 PC_ADDR23
55 A24 PC_ADDR24
56 A25 PC_ADDR25
57 RFU BVS2#
58 RESET RPC_RESET
59 WAIT PC_WAIT#
60 RFU(INPACK) PC_INPACK#
61 REG PC_REG
62 BVD2(SPKR) BVD2/SPKR
63 BVD1(STSCHG) BVD1/STSCHG#
64 D8 PCMCIA_DATA8
65 D9 PCMCIA_DATA9
66 D10 PCMCIA_DATA10
67 CD2 CD2#
68 GND
ASP-62660-01-S
PC_ADDR[24..0]

FIG. 32D

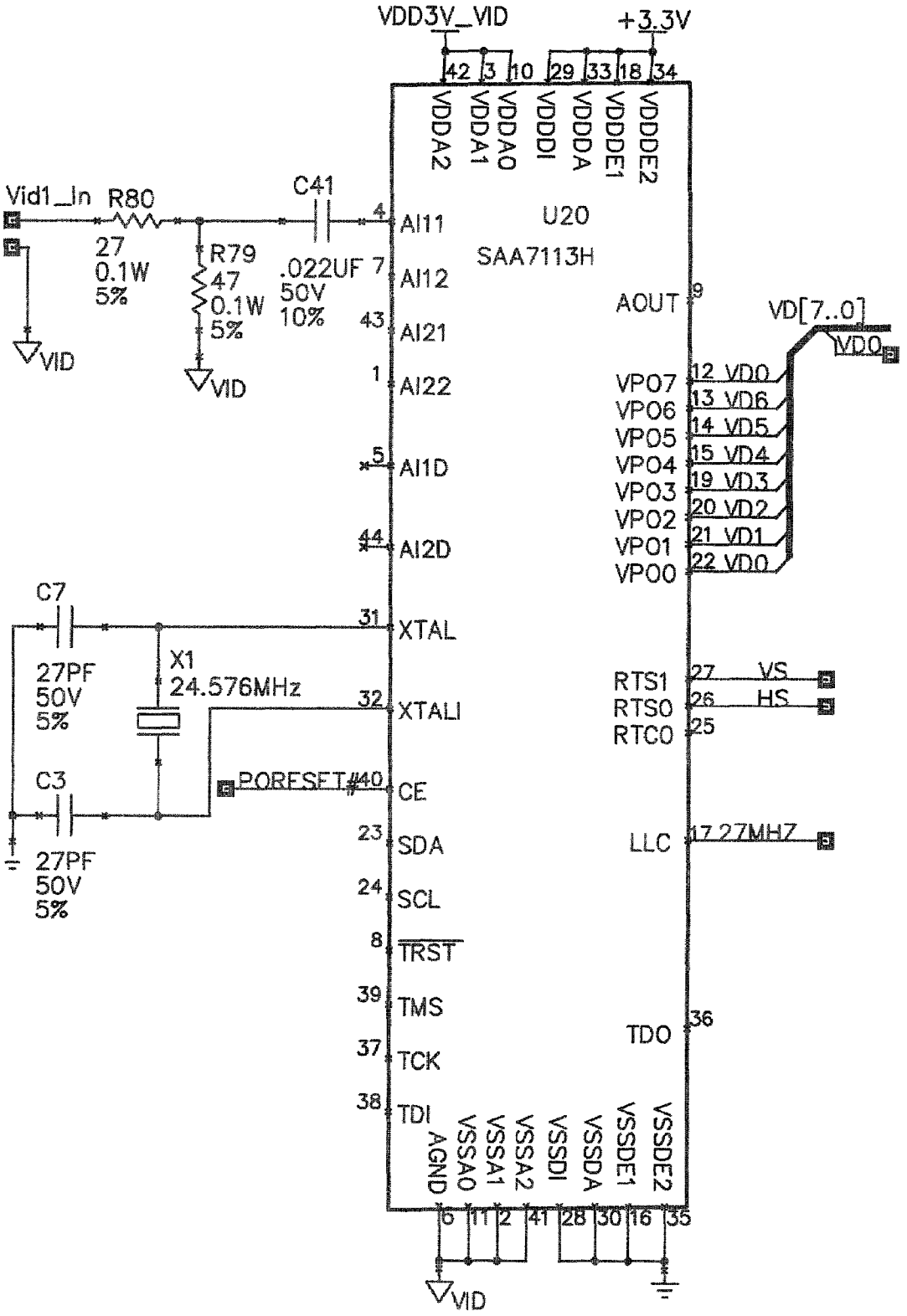

FIG. 33A (VIDEO FRONT END)

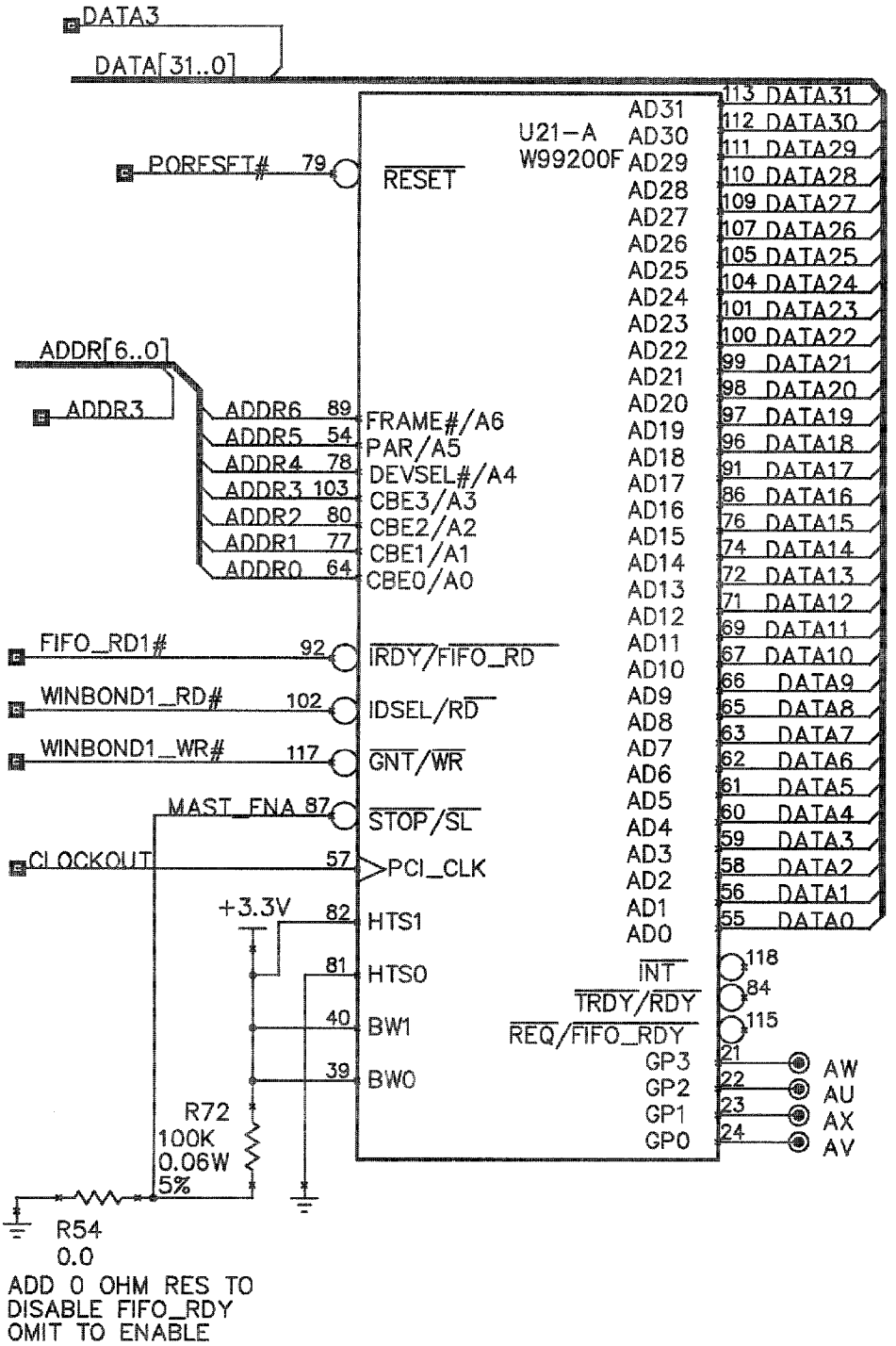

FIG. 33B (VIDEO ENCODER)

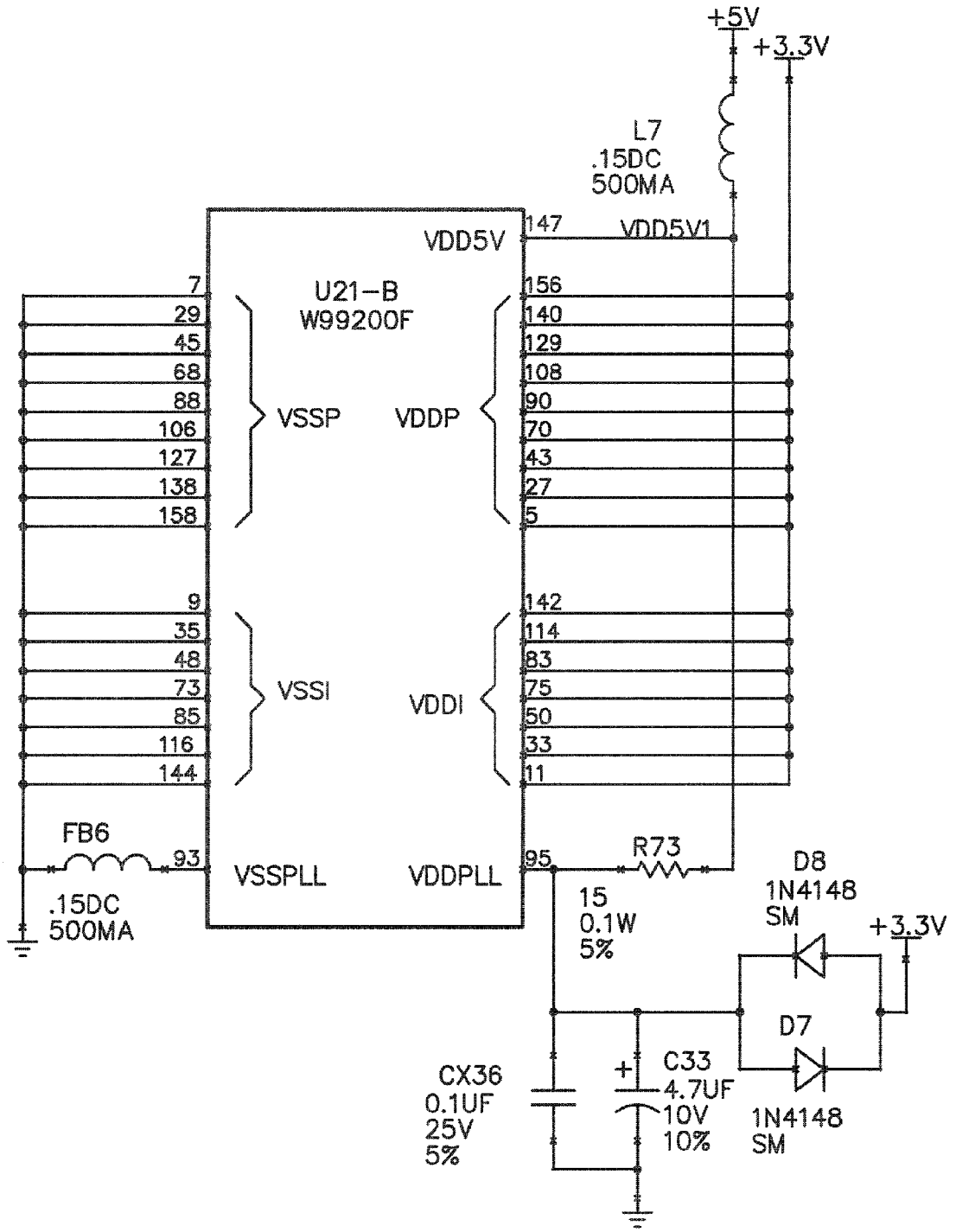

FIG. 33C (VIDEO ENCODER)

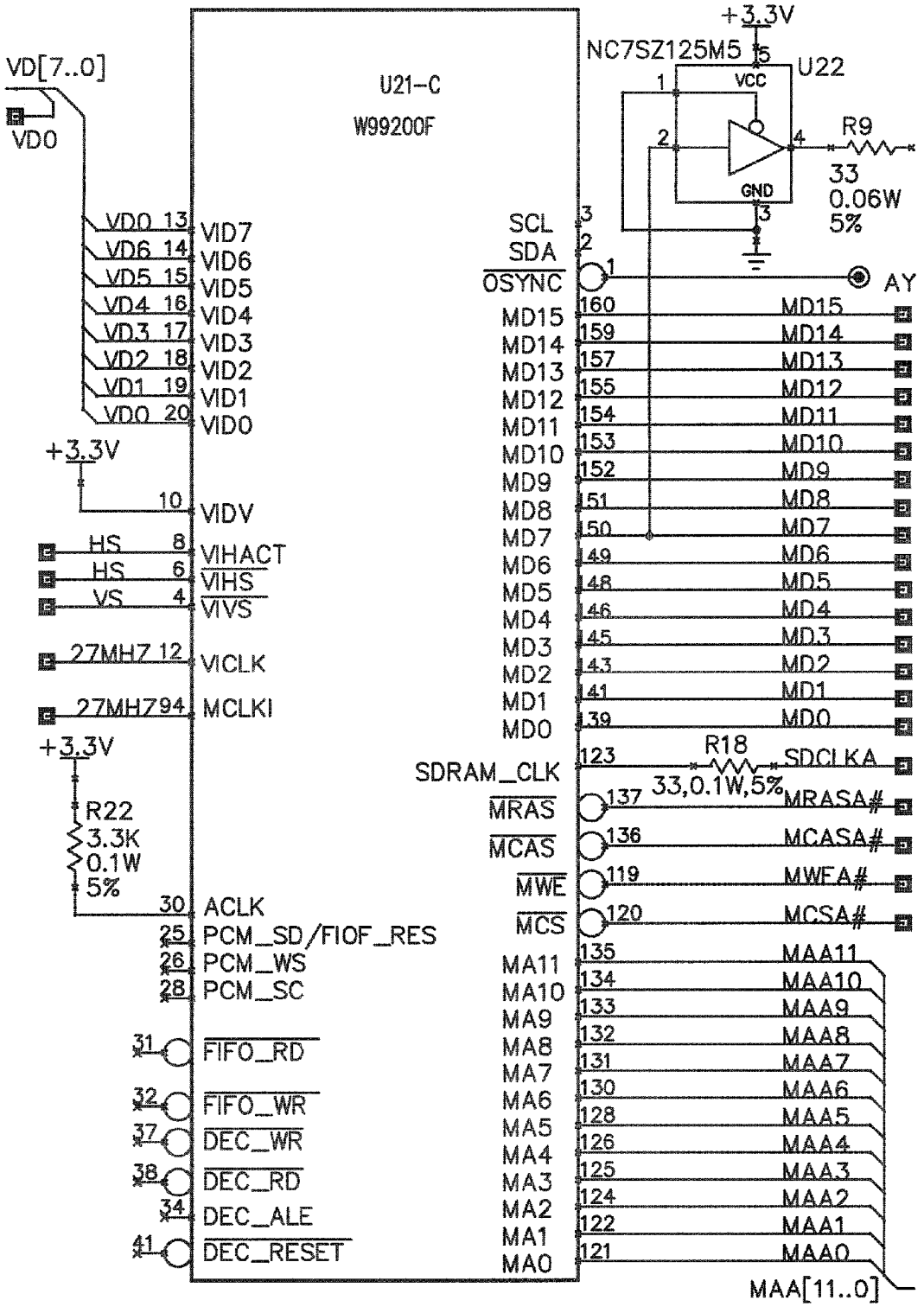

FIG. 33D (VIDEO ENCODER)

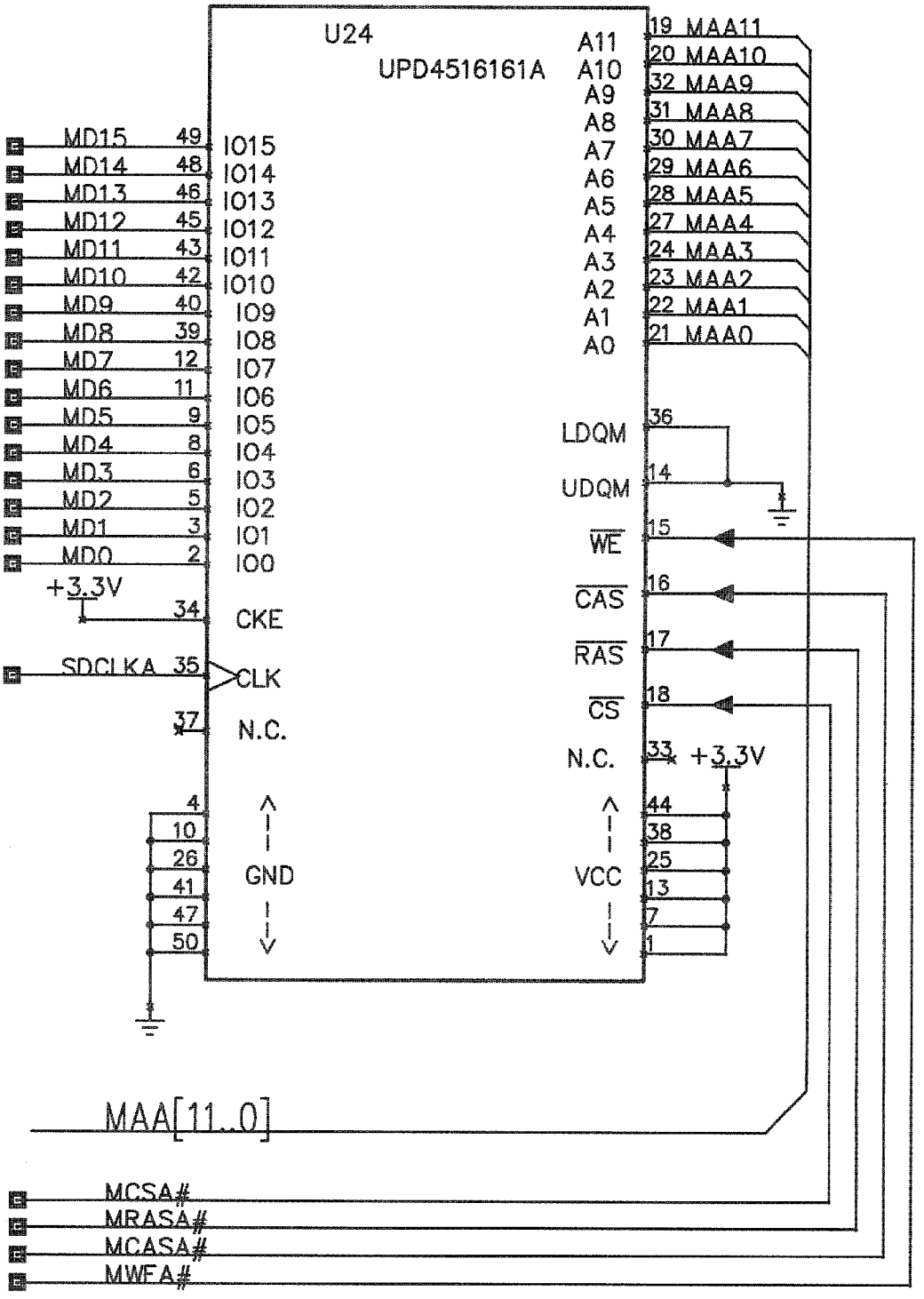

FIG. 33E (VIDEO ENCODER)

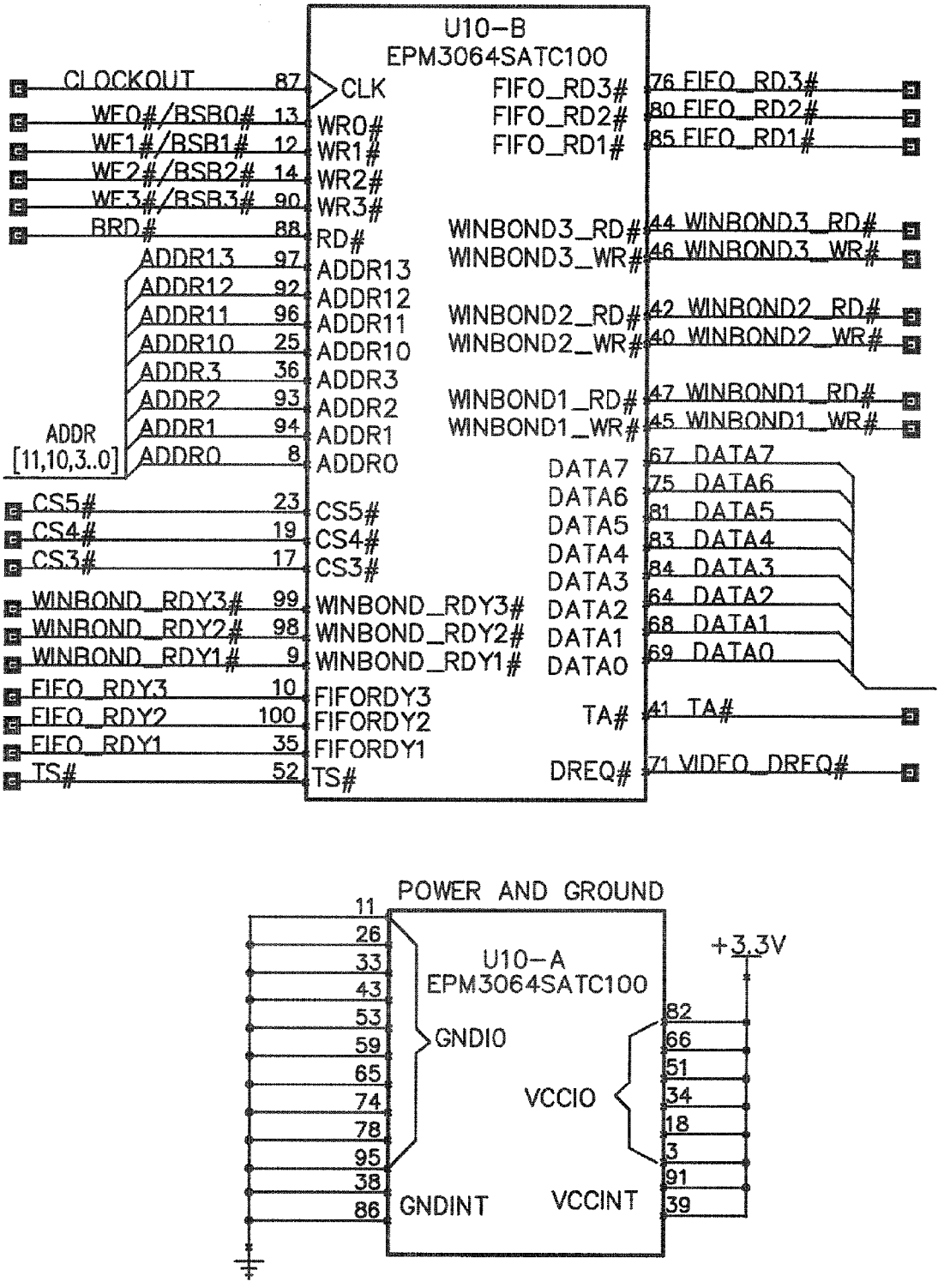

FIG. 33F (VIDEO ENCODER)

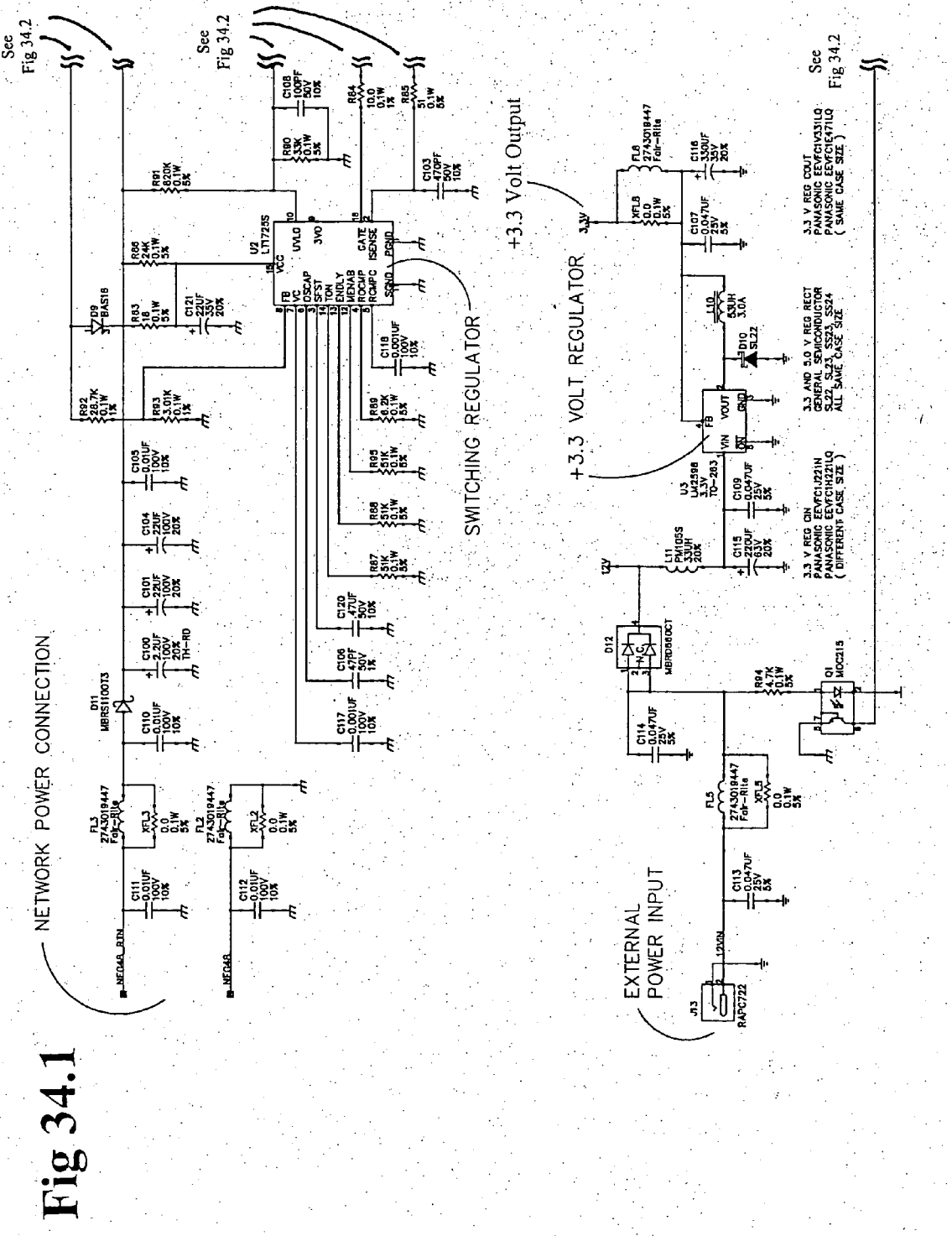
NETWORK POWER CONNECTION
SWITCHING REGULATOR
+3.3 Volt Output
+3.3 VOLT REGULATOR
EXTERNAL POWER INPUT
See Fig 34.2
See Fig 34.2
See Fig 34.2

Fig 34.1

Fig 34.2

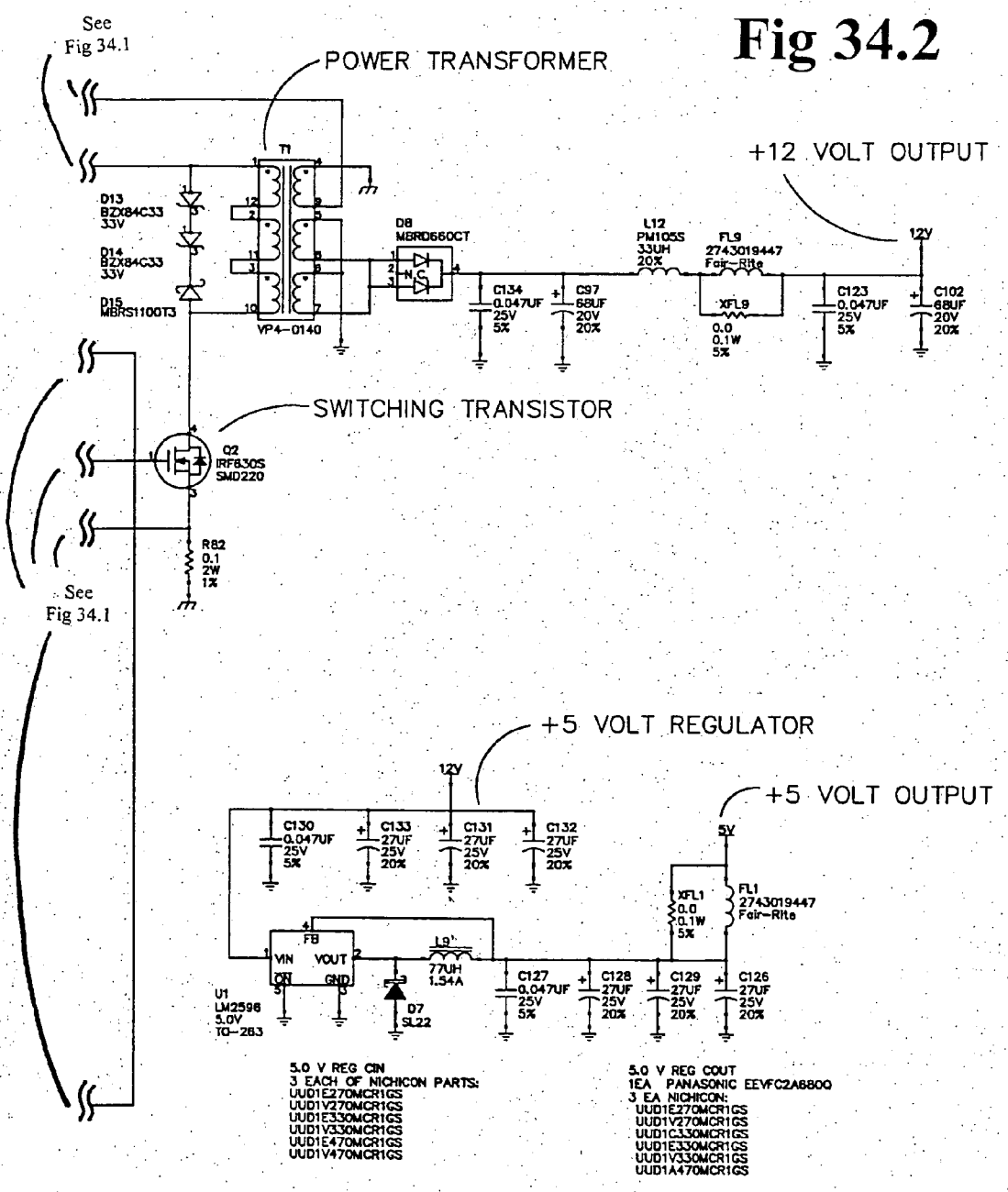
See Fig 34.1
POWER TRANSFORMER
+12 VOLT OUTPUT
T1
VP4-0140
D13 BZX84C33 33V
D14 BZX84C33 33V
D15 MBRS1100T3
D8 MBRD660CT
L12 PM105S 33UH 20%
FL9 2743019447 Fair-Rite
XFL9 0.0 0.1W 5%
12V
C134 0.047UF 25V 5%
C97 68UF 20V 20%
C123 0.047UF 25V 5%
C102 68UF 20V 20%
SWITCHING TRANSISTOR
Q2 IRF830S SMD220
R82 0.1 2W 1%
See Fig 34.1
+5 VOLT REGULATOR
+5 VOLT OUTPUT
12V
5V
C130 0.047UF 25V 5%
C133 27UF 25V 20%
C131 27UF 25V 20%
C132 27UF 25V 20%
XFL1 0.0 0.1W 5%
FL1 2743019447 Fair-Rite
FB
VIN
VOUT
ON
GND
L9 77UH 1.54A
U1 LM2596 5.0V TO-263
D7 SL22
C127 0.047UF 25V 5%
C128 27UF 25V 20%
C129 27UF 25V 20%
C126 27UF 25V 20%
5.0 V REG CIN
3 EACH OF NICHICON PARTS:
UUD1E270MCR1GS
UUD1V270MCR1GS
UUD1E330MCR1GS
UUD1V330MCR1GS
UUD1E470MCR1GS
UUD1V470MCR1GS
5.0 V REG COUT
1EA PANASONIC EEVFC2A680Q
3 EA NICHICON:
UUD1E270MCR1GS
UUD1V270MCR1GS
UUD1C330MCR1GS
UUD1E330MCR1GS
UUD1V330MCR1GS
UUD1A470MCR1GS

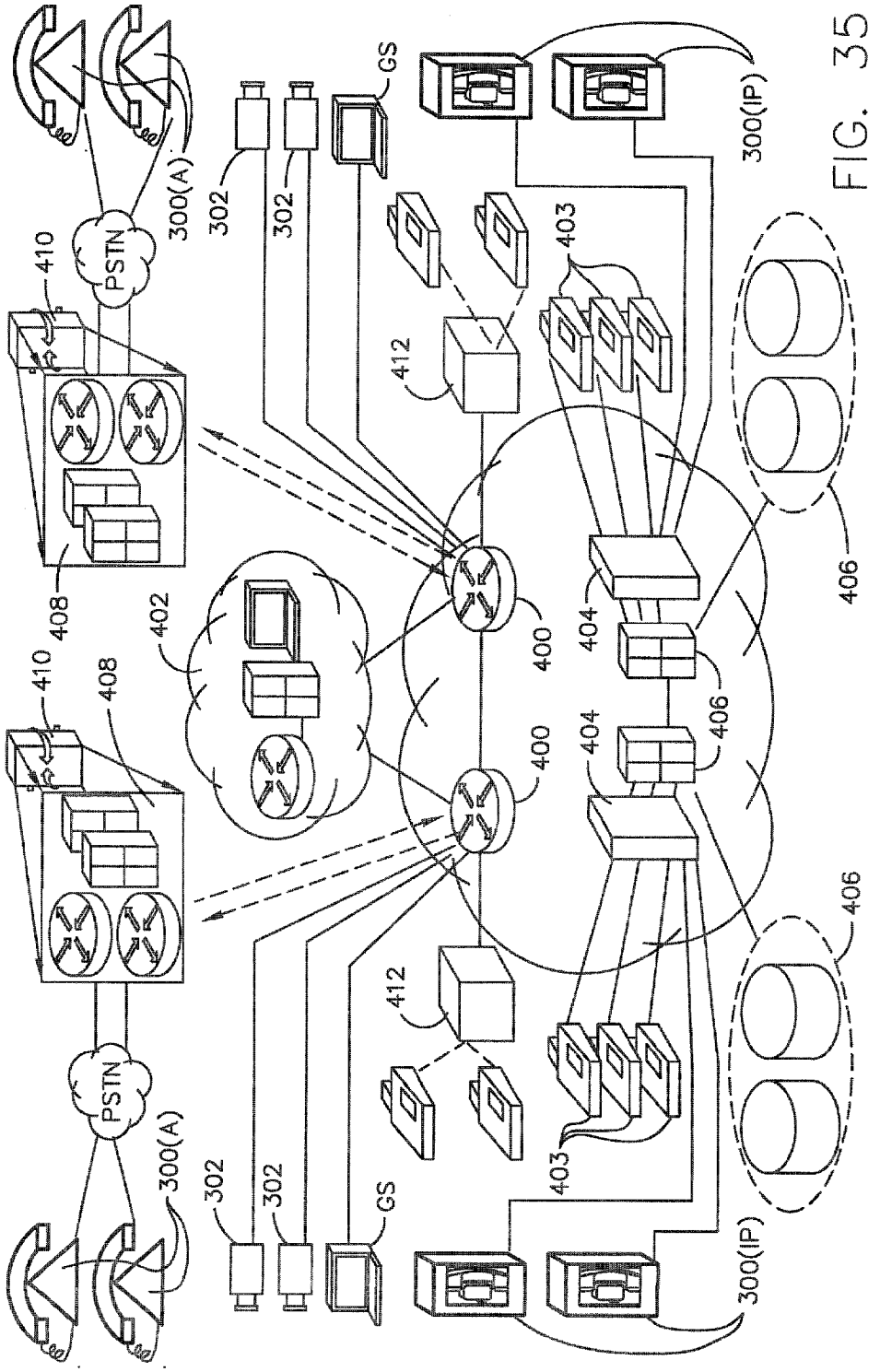

FIG. 35

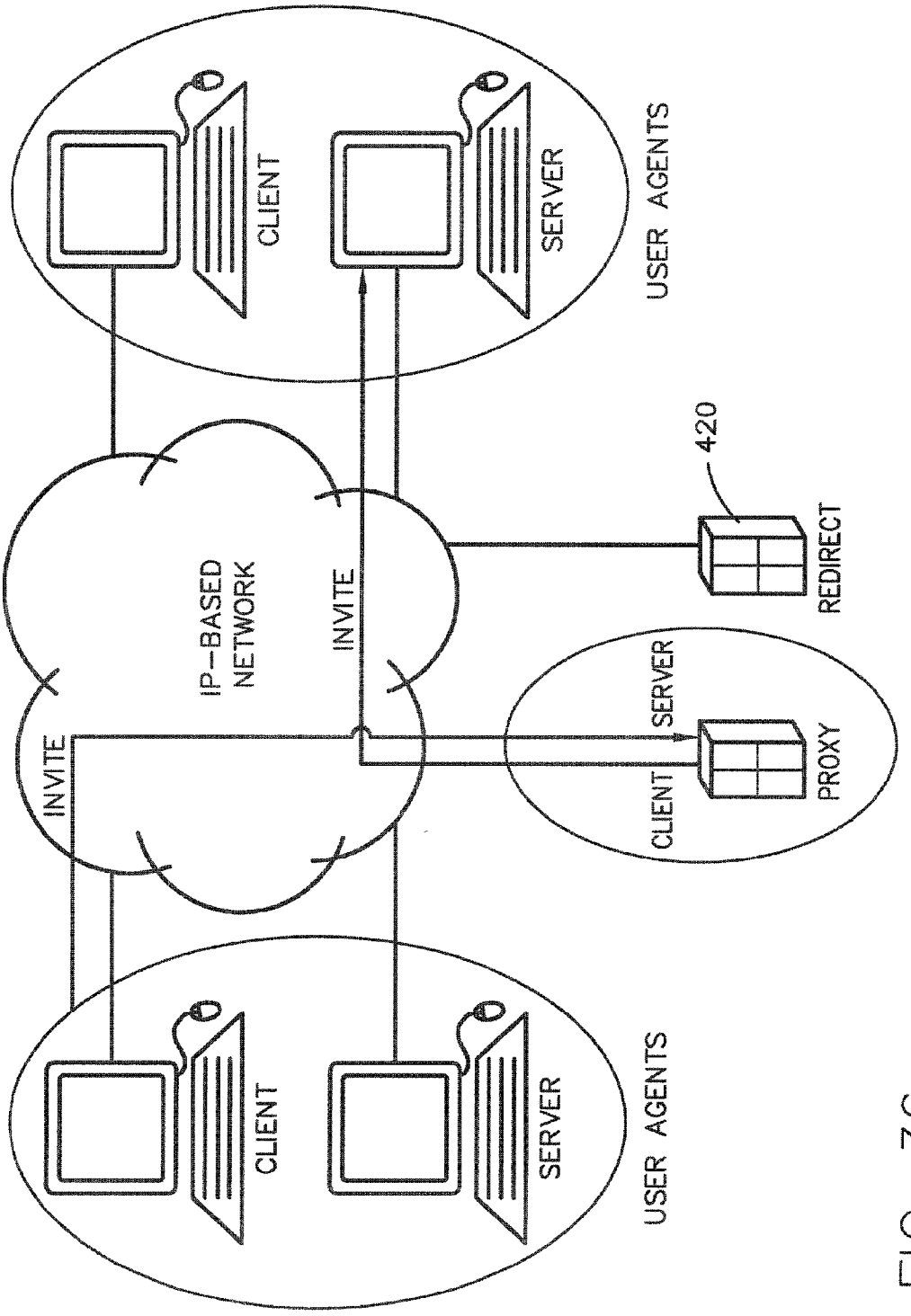
USER AGENTS
CLIENT
SERVER
IP-BASED NETWORK
INVITE
INVITE
420
REDIRECT
SERVER
CLIENT
PROXY
USER AGENTS
CLIENT
SERVER

FIG. 36

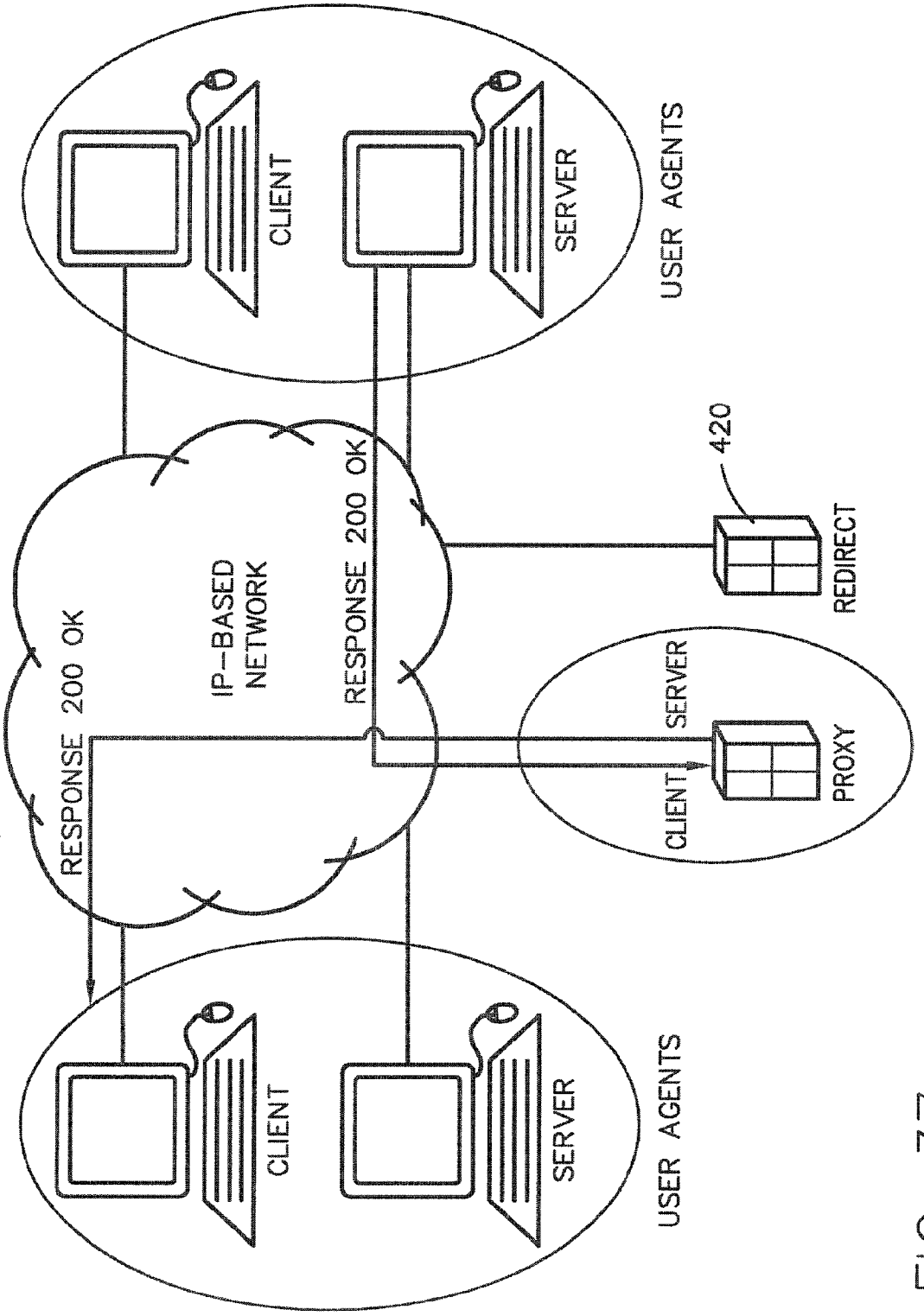
USER AGENTS
CLIENT
SERVER
IP-BASED NETWORK
RESPONSE 200 OK
RESPONSE 200 OK
420
REDIRECT
SERVER
CLIENT
PROXY
USER AGENTS
CLIENT
SERVER

FIG. 37

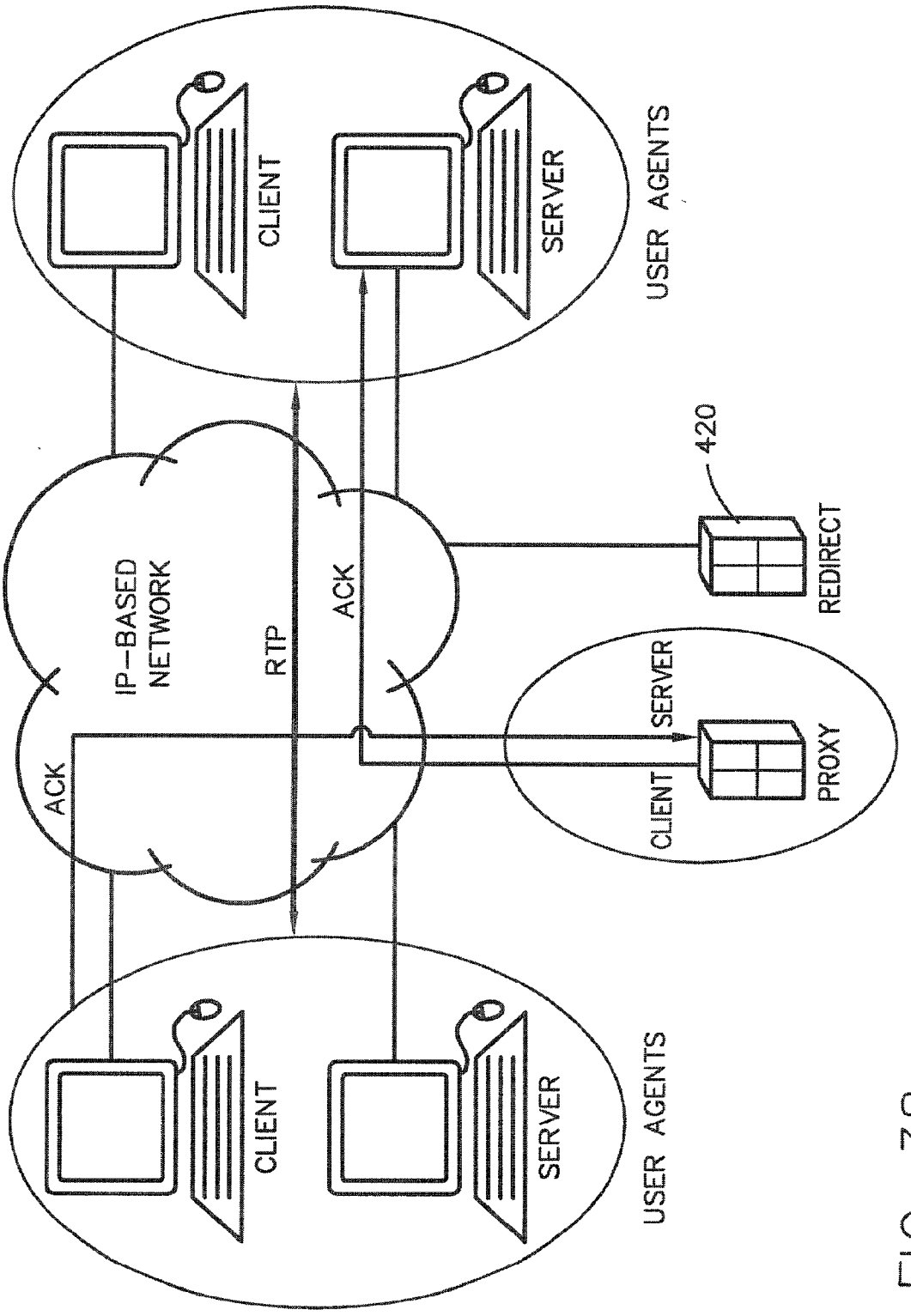
USER AGENTS
CLIENT
SERVER
IP—BASED NETWORK
RTP
ACK
ACK
420
REDIRECT
SERVER
CLIENT
PROXY
USER AGENTS
CLIENT
SERVER

FIG. 38

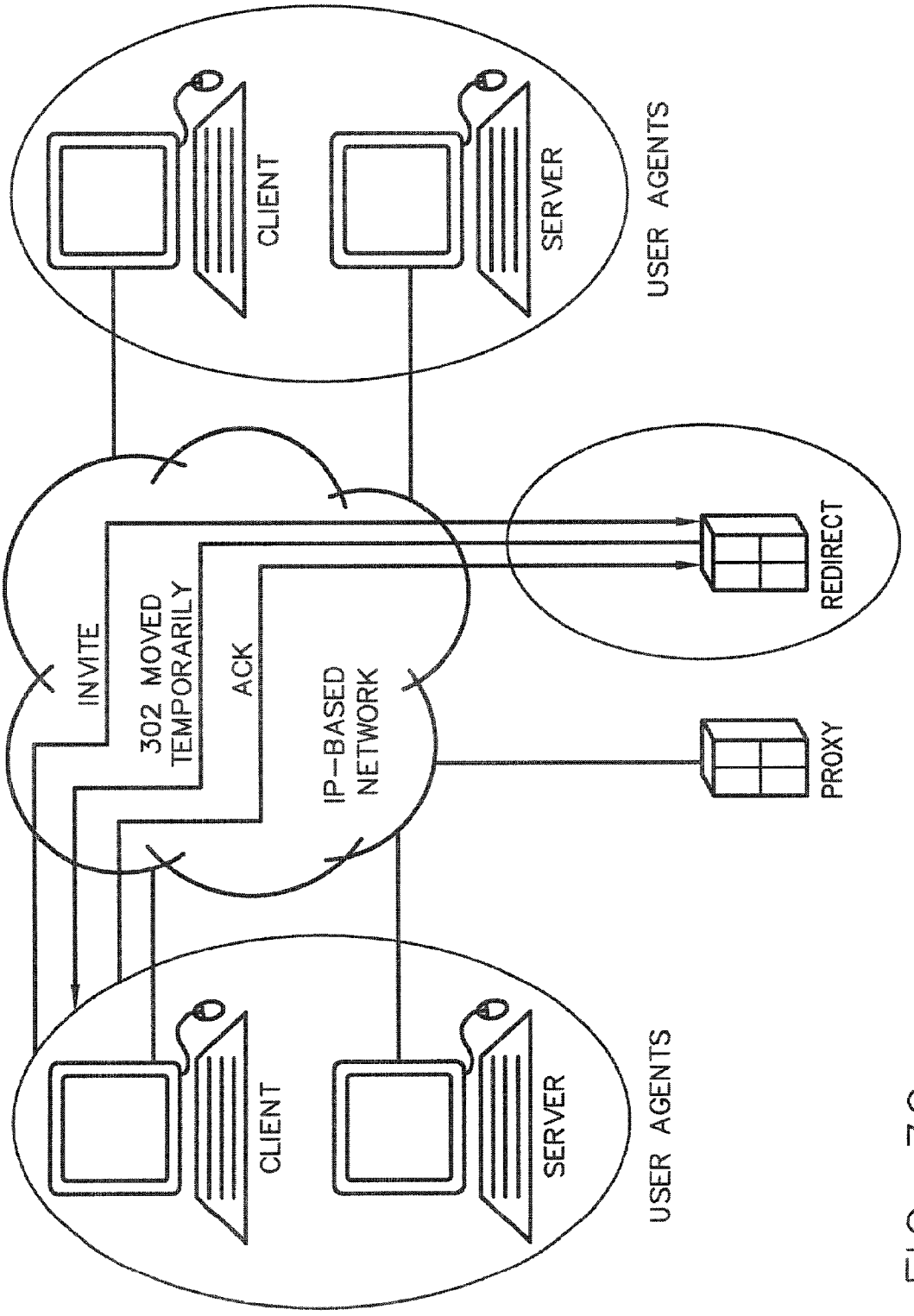
USER AGENTS
CLIENT
SERVER
REDIRECT
PROXY
IP-BASED NETWORK
INVITE
302 MOVED TEMPORARILY
ACK
USER AGENTS
CLIENT
SERVER

FIG. 39

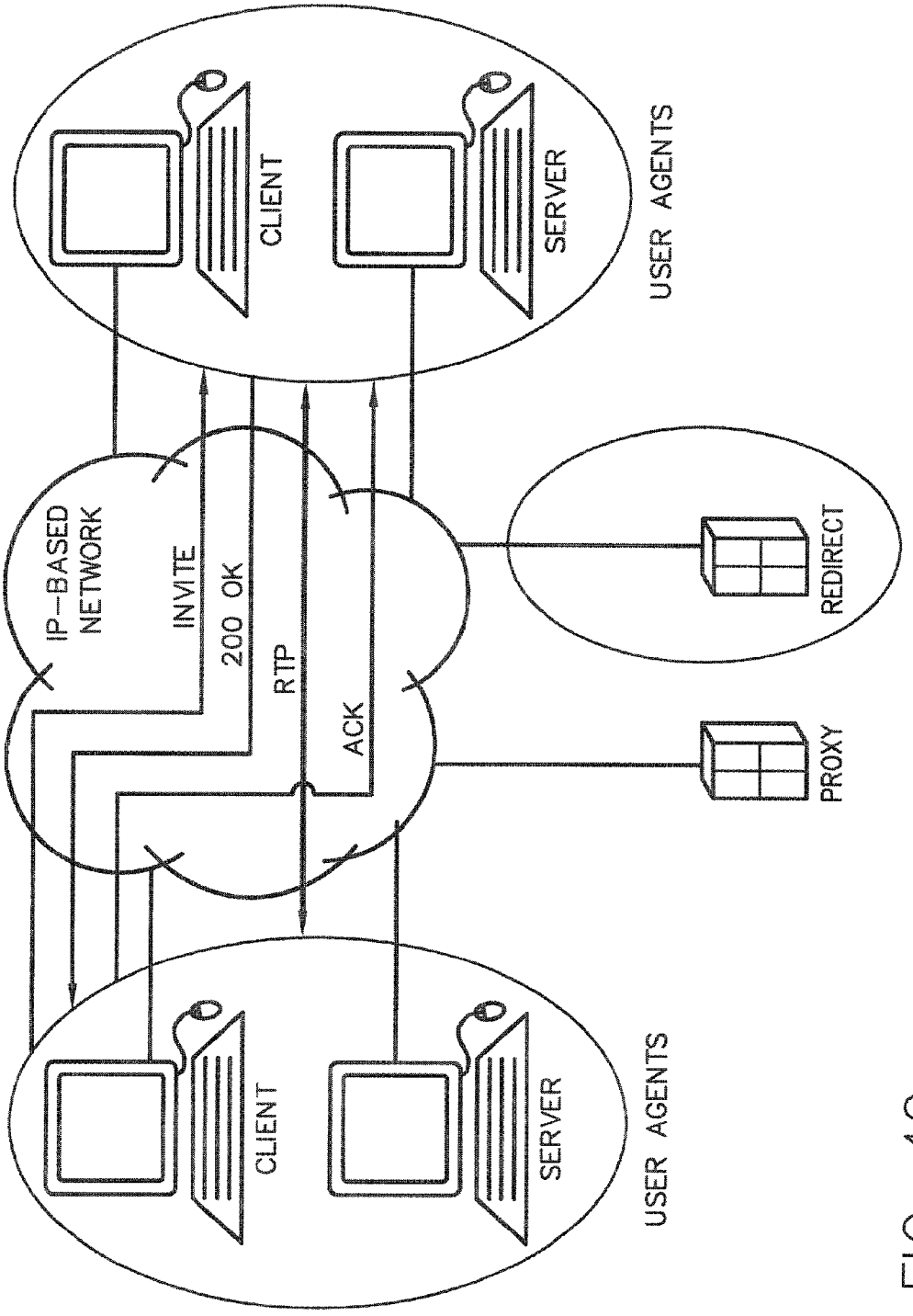
USER AGENTS
CLIENT
SERVER
IP—BASED NETWORK
INVITE
200 OK
RTP
ACK
REDIRECT
PROXY
USER AGENTS
CLIENT
SERVER

FIG. 40

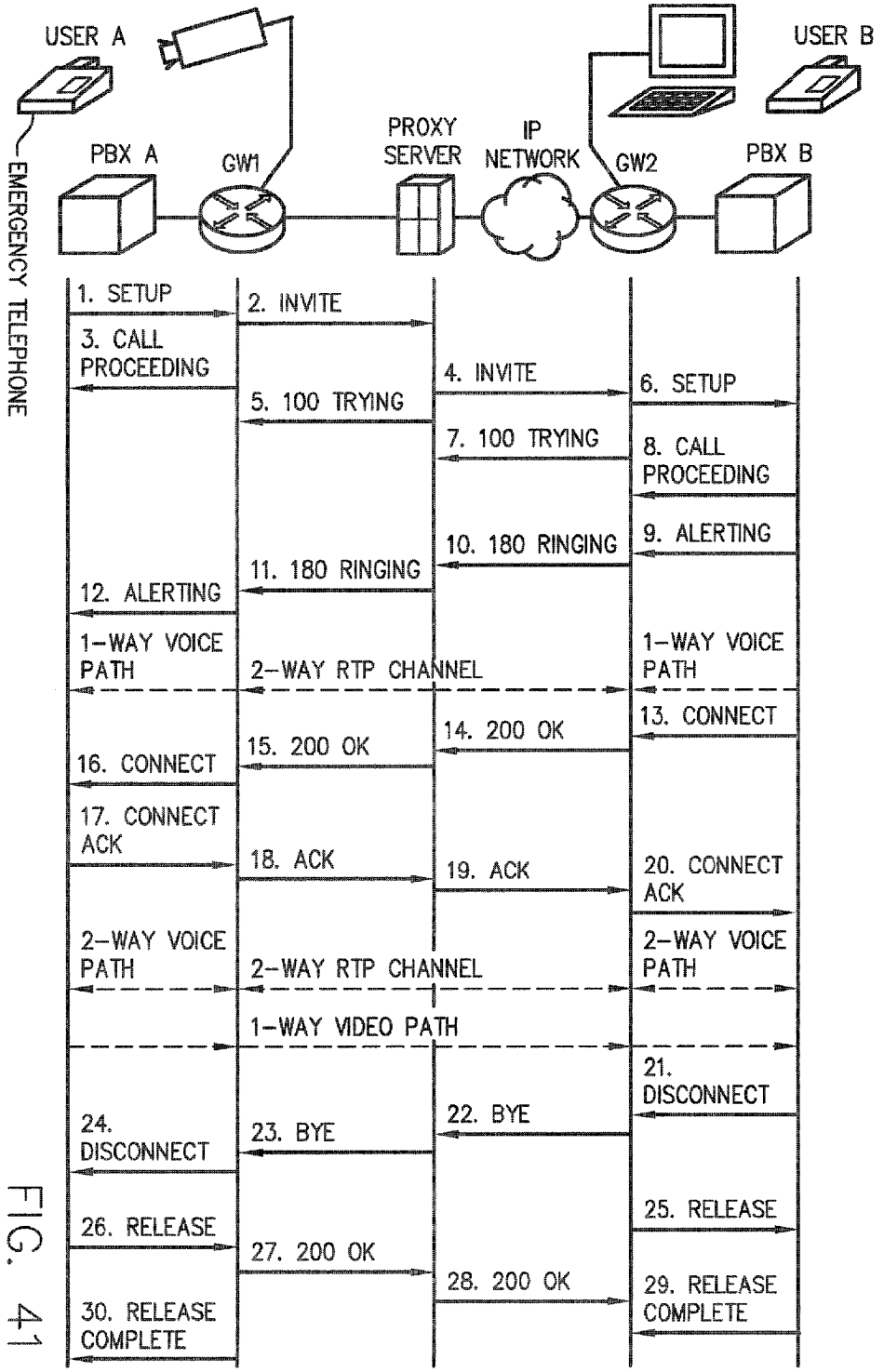
USER A
USER B
EMERGENCY TELEPHONE
PBX A
GW1
PROXY SERVER
IP NETWORK
GW2
PBX B
1. SETUP
2. INVITE
3. CALL PROCEEDING
4. INVITE
6. SETUP
5. 100 TRYING
7. 100 TRYING
8. CALL PROCEEDING
10. 180 RINGING
9. ALERTING
11. 180 RINGING
12. ALERTING
1-WAY VOICE PATH
2-WAY RTP CHANNEL
1-WAY VOICE PATH
14. 200 OK
13. CONNECT
15. 200 OK
16. CONNECT
17. CONNECT ACK
18. ACK
19. ACK
20. CONNECT ACK
2-WAY VOICE PATH
2-WAY RTP CHANNEL
2-WAY VOICE PATH
1-WAY VIDEO PATH
21. DISCONNECT
22. BYE
24. DISCONNECT
23. BYE
25. RELEASE
26. RELEASE
27. 200 OK
28. 200 OK
29. RELEASE COMPLETE
30. RELEASE COMPLETE

FIG. 41

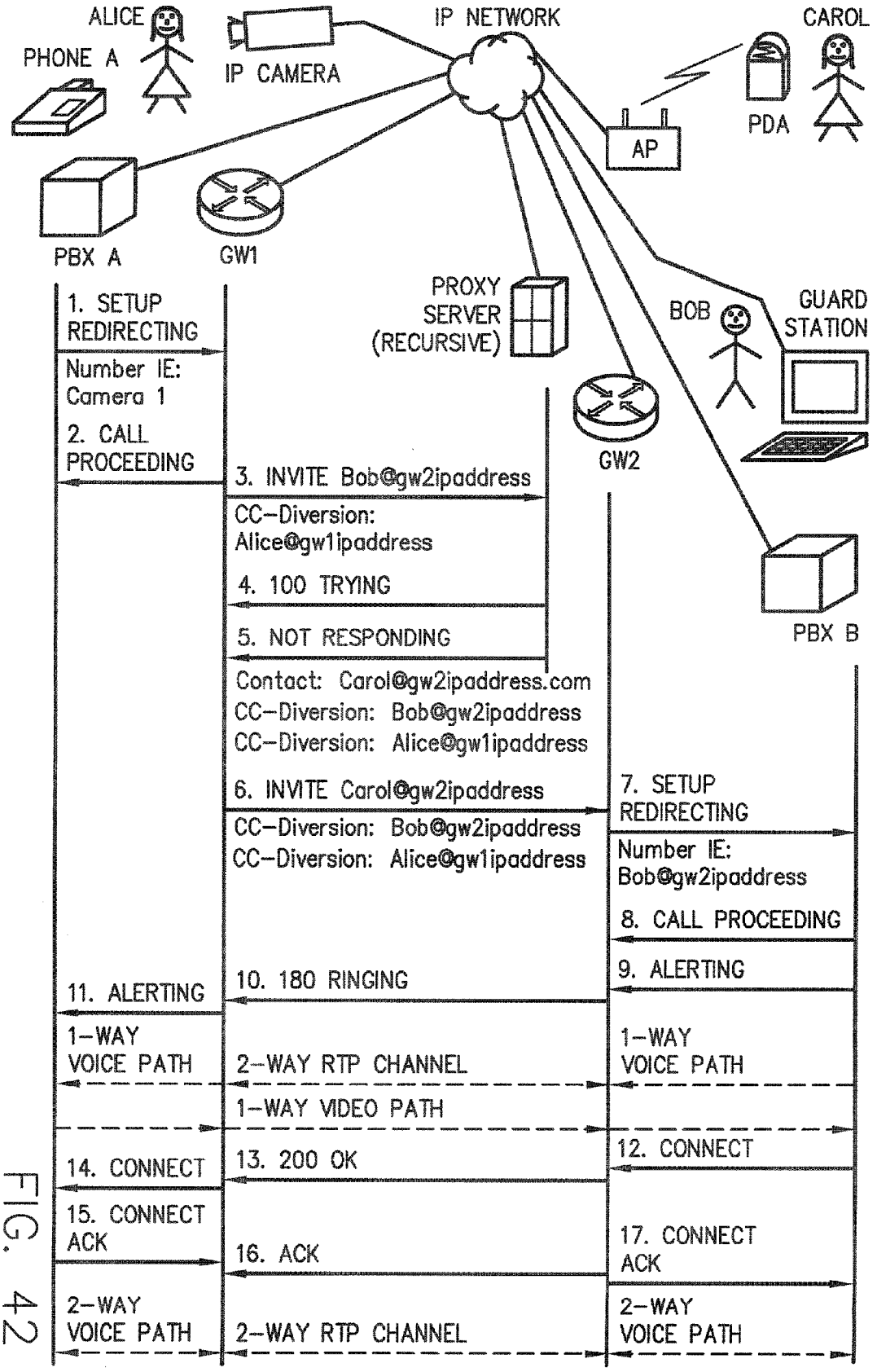
ALICE
PHONE A
IP CAMERA
IP NETWORK
CAROL
PDA
AP
PBX A
GW1
PROXY SERVER (RECURSIVE)
BOB
GUARD STATION
GW2
PBX B
1. SETUP REDIRECTING
Number IE: Camera 1
2. CALL PROCEEDING
3. INVITE Bob@gw2ipaddress
CC-Diversion: Alice@gw1ipaddress
4. 100 TRYING
5. NOT RESPONDING
Contact: Carol@gw2ipaddress.com
CC-Diversion: Bob@gw2ipaddress
CC-Diversion: Alice@gw1ipaddress
6. INVITE Carol@gw2ipaddress
CC-Diversion: Bob@gw2ipaddress
CC-Diversion: Alice@gw1ipaddress
7. SETUP REDIRECTING
Number IE: Bob@gw2ipaddress
8. CALL PROCEEDING
9. ALERTING
10. 180 RINGING
11. ALERTING
1-WAY VOICE PATH
2-WAY RTP CHANNEL
1-WAY VOICE PATH
1-WAY VIDEO PATH
12. CONNECT
13. 200 OK
14. CONNECT
15. CONNECT ACK
16. ACK
17. CONNECT ACK
2-WAY VOICE PATH
2-WAY RTP CHANNEL
2-WAY VOICE PATH

FIG. 42

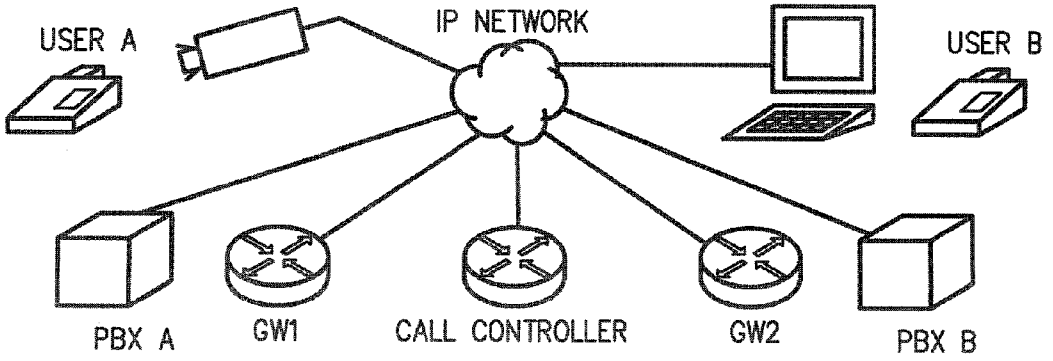
USER A
IP NETWORK
USER B
PBX A
GW1
CALL CONTROLLER
GW2
PBX B

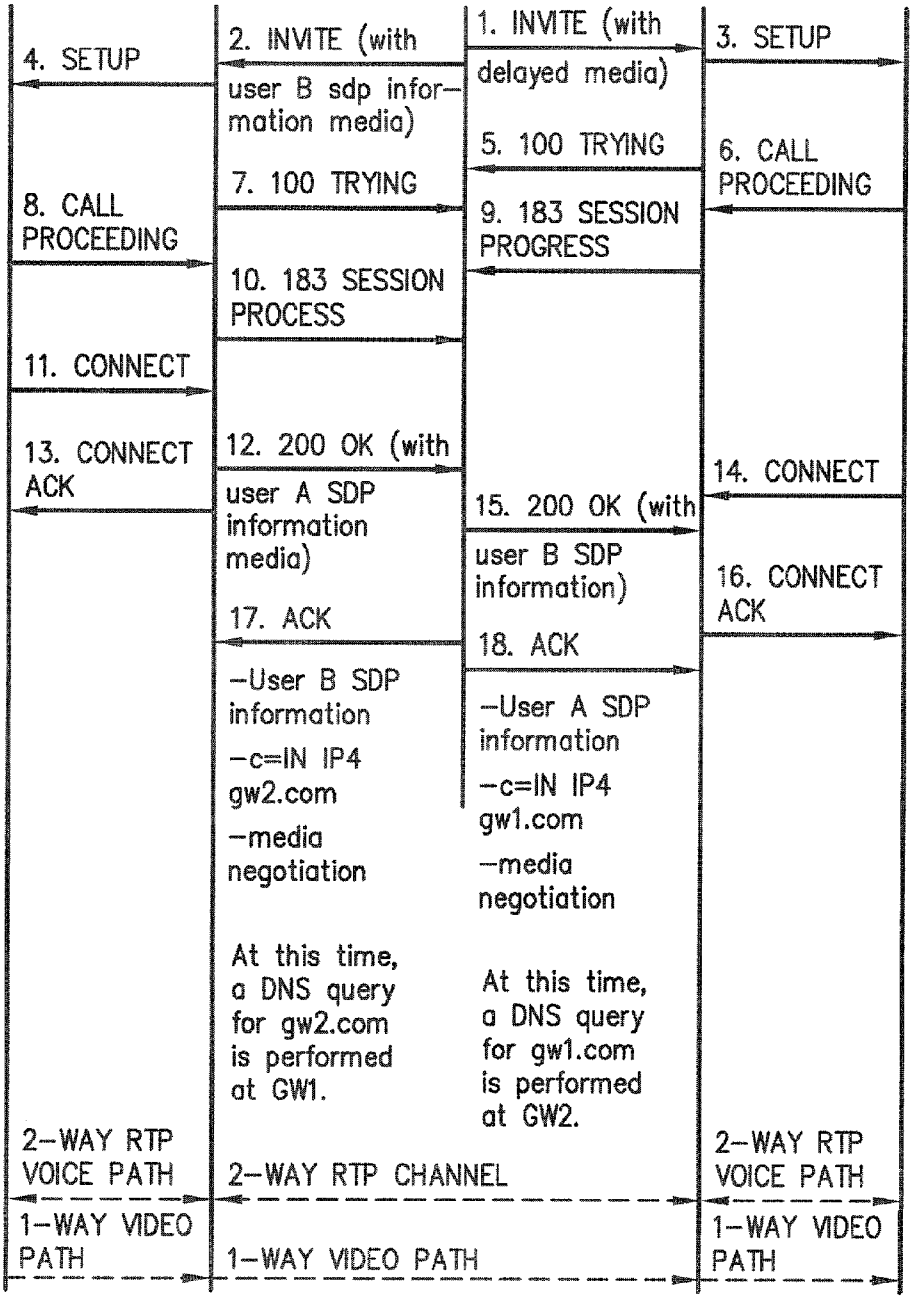
4. SETUP
2. INVITE (with user B sdp information media)
1. INVITE (with delayed media)
3. SETUP
5. 100 TRYING
6. CALL PROCEEDING
7. 100 TRYING
8. CALL PROCEEDING
9. 183 SESSION PROGRESS
10. 183 SESSION PROCESS
11. CONNECT
13. CONNECT ACK
12. 200 OK (with user A SDP information media)
14. CONNECT
15. 200 OK (with user B SDP information)
16. CONNECT ACK
17. ACK
18. ACK
-User B SDP information
-c=IN IP4 gw2.com
-media negotiation
-User A SDP information
-c=IN IP4 gw1.com
-media negotiation
At this time, a DNS query for gw2.com is performed at GW1.
At this time, a DNS query for gw1.com is performed at GW2.
2-WAY RTP VOICE PATH
2-WAY RTP CHANNEL
2-WAY RTP VOICE PATH
1-WAY VIDEO PATH
1-WAY VIDEO PATH
1-WAY VIDEO PATH

FIG. 43

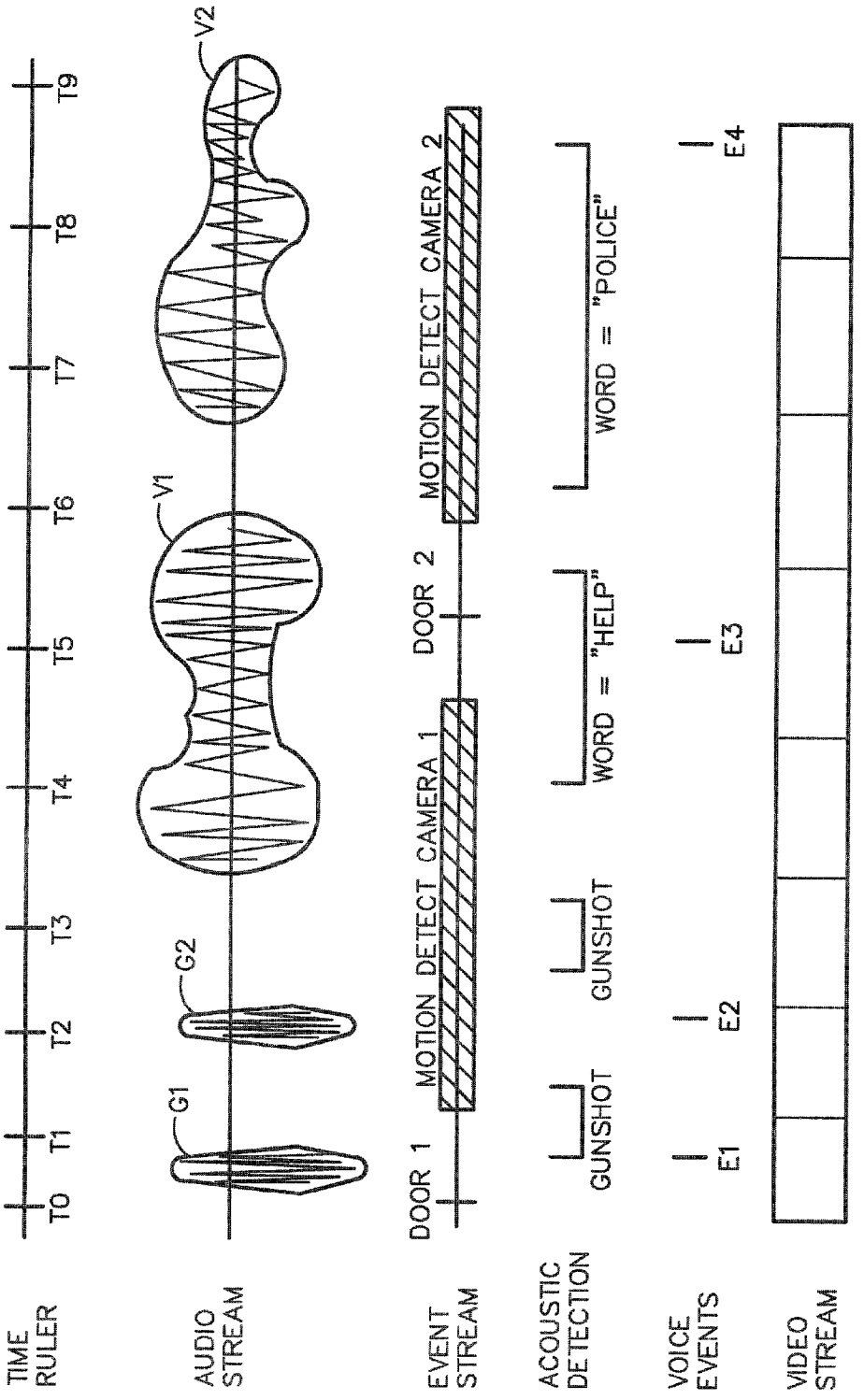
TIME RULER
T0
T1
T2
T3
T4
T5
T6
T7
T8
T9
AUDIO STREAM
G1
G2
V1
V2
EVENT STREAM
DOOR 1
MOTION DETECT CAMERA 1
DOOR 2
MOTION DETECT CAMERA 2
ACOUSTIC DETECTION
GUNSHOT
GUNSHOT
WORD = "HELP"
WORD = "POLICE"
VOICE EVENTS
E1
E2
E3
E4
VIDEO STREAM

FIG. 44

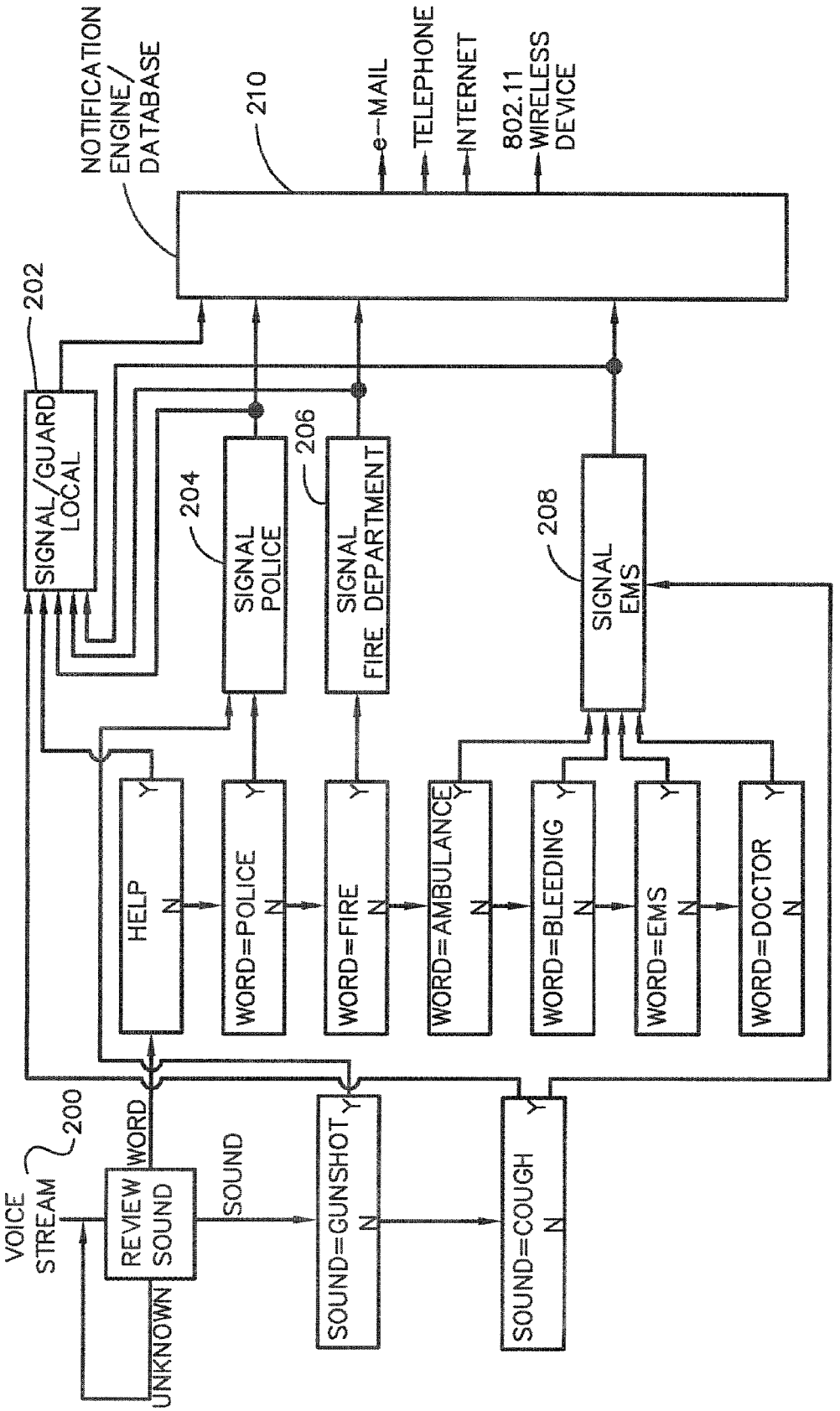
NOTIFICATION ENGINE/ DATABASE
210
e-MAIL
TELEPHONE
INTERNET
802.11 WIRELESS DEVICE
202
SIGNAL/GUARD LOCAL
204
SIGNAL POLICE
206
SIGNAL FIRE DEPARTMENT
208
SIGNAL EMS
HELP
WORD=POLICE
WORD=FIRE
WORD=AMBULANCE
WORD=BLEEDING
WORD=EMS
WORD=DOCTOR
Y
N
200
VOICE STREAM
REVIEW SOUND
WORD
SOUND
UNKNOWN
SOUND=GUNSHOT
SOUND=COUGH

FIG. 45

EMERGENCY TELEPHONE WITH INTEGRATED SURVEILLANCE SYSTEM CONNECTIVITY

BACKGROUND OF THE INVENTION

[0001] 1. Field of the Invention

[0002] The subject invention is generally related to emergency telephone systems and is specifically directed to an emergency telephone system capable of being connected to and integrated with a network supported comprehensive multi-media surveillance system.

[0003] 2. Discussion of the Prior Art

[0004] It is common practice to provide emergency telephones in strategic locations such as elevators, along highways and in various facilities such as airports, schools and hospitals. Typically these telephones are pre-programmed to dial a security or response station and automatically dial upon removal of the handset from the switch-hook or cradle. Most of these telephones are "Plain Old Telephone Service (POTS)" devices and are hard-wired to the landline telephone system and rely on a common carrier to transmit the call. In some cases, closed circuit systems or dedicated point-to-point systems sometimes called "ring-down circuits" may be utilized. More recently, some emergency telephones have been installed utilizing wireless telephone technology such as cellular. Solar power of these installations allows for easy installation without relying on other public services such as telephone lines and power lines. These are appearing along remote highways, on college campuses, in parks, and in other outdoor public areas.

[0005] In use, the caller requiring emergency assistance will pick up the telephone and once answered, will provide the responding party with details of the emergency. In more sophisticated installations the identification of the emergency telephone will be conveyed utilizing Caller ID (CLID) technology, which then can index into a database and present the location of the telephone from which the call is being made. While these systems have been in wide use for many years, there remain several drawbacks to the usefulness of the system in dealing with many emergency situations. First, the receiving station must be continuously manned in a specific location such as at a guard station. There are many instances where a guard or other personnel is busy making rounds or with other duties and is not available to answer the call immediately upon transmission. In certain types of situations, time may be a very critical factor in dealing with the emergency, and such delays in response can diminish the opportunity to deal with the emergency in the most effective manner.

[0006] Further, such systems do not permit the responding personnel to make any personal direct assessment of the emergency. They are required to take the information given to them as accurate and accordingly develop their response. This presents a problem in determining whether the caller is overstating or understating the emergency conditions. This problem is magnified by the fact that the caller may be under some stress when placing the call and may not be able to give accurate information in a calm manner, leaving it to the response personnel to make an assessment of the situation with less than optimum information. In extreme cases, the person making the call may be injured or even incapacitated and not be able to make adequate disclosure of the emergency. The person may also be forced to flee the location of the emergency telephone before a complete disclosure has been made.

[0007] Recently, security systems have been developed which have the capability of better assessing an event and of transmitting information to a hierarchy of recipients depending on the assessed conditions. In additions, such systems have back-up capability so that when the first response destination is not available the information is forwarded to back-up response destinations in a selected priority, assuring that a response can be made in a timely manner. An example of such a system is shown and described in my copending applications Ser. Nos.: 09/257,720, filed on Feb. 25, 1999; 09/594,041, filed on Jun. 14, 2000; and 09/853,274, filed on May 11, 2001.

[0008] Such systems greatly enhance the assessment of a situation and expedite appropriate responses. To date, emergency telephone systems have not been able to assure the quick and accurate responses that are available with the comprehensive, multi-media surveillance systems such as described in the aforementioned application.

[0009] An additional disadvantage is the reliance on landline telephone systems to transmit the call. Often this form of communication is one of the first systems to break down in an emergency. Alternative and back-up communications systems are desired to assure that an emergency call can be properly transmitted to the intended recipient.

[0010] More recently, appliances have been designed that permit analog telephone systems to provide voice data that can be converted to IP protocols, permitting digitizing of the information for transmission over digital systems such as LANS, WANS and the Internet. An example of such an appliance is the MULTIVOIP Standalone voice/IP gateway appliance offered by MultiTech Systems of Mounds View, Minn. This system supports analog voice and fax communication of an IP network. These voice over IP or VOIP systems permit standard, analog telephones (sometimes called by the industry POTS—Plain Old Telephone Service telephones) to be used to communicate voice transmissions directly over a digital network system. Cisco Systems also makes a similar product, the ATA 186 Analog Telephone Adapter that allows POTS telephone instruments to perform on an IP telephone system.

[0011] Purely digital IP telephones have also been designed. These devices do not convert existing analog telephone instruments to IP; instead they are devices that include the telephone handset, the analog to digital/digital to analog converter (CODEC) and the IP interface into one device. These devices also facilitate transmission of voice over digital networks such as LANS, WANS, Wireless LANS and the Internet. Cisco Systems manufactures two such IP telephones. The Cisco 12 SP+ model is the Cisco IP telephone designed for business professionals and office workers. This voice instrument supports 12 programmable line and feature buttons, an internal, high-quality two-way speakerphone, and microphone mute. This phone also features a large LCD display for call status and identification. An LED associated with each of the 12 feature and line buttons provides feature and line status. The Cisco 30 VIP model is the full-featured Cisco IP telephone for executives and managers. This voice instrument provides 30 programmable line and feature buttons, an internal, high-quality, two-way speakerphone with microphone mute, and a transfer feature button. A large 40-character LCD display features ⅝" characters provides information such as date and time, calling party name, calling

party number, and digits dialed. An LED associated with each of the 30 feature and line buttons provides feature and line status.

[0012] Each model, including the analog telephone adapter with a POTS telephone attached, is a full-featured telephone that can be plugged directly into a standard 10BaseT Ethernet connection. Each provides toll-quality audio, with no need for a companion PC. Because they are IP-based telephones, they can be installed anywhere on a corporate IP network. The telephones are connected to typical network switched hubs and routers in a like manner to PC's. In a preferred implementation, the phones and analog telephone adapters are DHCP Dynamic Host Configuration Protocol (DHCP) supported and do not need to be co-located with the IP switch. Typically the analog telephone adapters and IP telephones communicated with digitized compressed voice conforming to a standard such as the popular G.711 and G.723.1 audio compression for low-bandwidth requirements.

[0013] Advanced functions are also provided by the more sophisticated IP telephones. In the case of the Cisco IP Telephones, each model also contains an integrated Ethernet repeater, so you can use a single Ethernet switch port for the computer (data) and the IP telephone. Cisco IP telephones are also Microsoft NetMeeting(™) enabled. Using NetMeeting, features such as application sharing and videoconferencing are available simply by pressing a button on your Cisco IP telephone. The phones are configured M using your Web browser.

[0014] It is important to note that the switching function in an IP telephony system is provided by one or more computer processing element(s) on the network to which the IP telephones/adapters are attached. That processing element typically contains a plurality of System Processing Engine (SPE) cards. An SPE card is a computing platform that runs the telephony applications that support the IP phones. The number of cards that are required is dependent upon the number of stations that are to be supported. The processing elements can provide a range of telephony applications. Currently they include:

[0015] Call Manager Application—an application that provides connection and management of the voice calls. This software maps directories entries and telephone numbers to telephone sets. This includes all of the logic necessary to "route" the data from the IP address of the origination telephone to the correct IP address for the destination telephones.

[0016] Conference Bridge Application—this function allows three or more IP telephones and/or adapters to be connected in a virtual conference. This requires mixing or adding of the voice information in the digital domain and the conference bridge application.

[0017] Media Transfer Point Application—this function allows connection of calls over a wide variety of circuits. These may be traditional telephony circuits such as ISDN, T-**1**, T-**2**, OC-**3**, etc. They also may be IP circuits. An example of an IP transfer application is the Cisco IP Transfer Point (ITP), a product for transporting Signaling System 7 (SS7) traffic over IP (SS7oIP) networks.

[0018] Integrated Voice Mail Application—this application allows the digital streams of voice coming from the IP telephones, analog adapters, and incoming circuit trunks to be recorded in digital format on a System Processing Element or a designated File Server. Access to the server can be made utilizing this application to access the stored digital voice information over the IP network. Access can also be accomplished from the IP telephones, analog adapters, and incoming circuit trunks.

SUMMARY OF THE INVENTION

[0019] The subject invention is directed to apparatus 1) integrating legacy emergency telephone systems into a comprehensive, multi-media surveillance system with network connectivity, 2) creating emergency telephone systems with IP telephones integrated into a comprehensive multi-media surveillance system with network connectivity, 3) providing enhanced security appliances with one-way or two-way IP audio capability in order to interoperate with guard stations, IP telephones, and IP analog telephone adapters, and 4) provide a method of searching a multimedia database by voice recognition or audio processing/sound recognition.

[0020] In the case of integrating legacy emergency telephone systems, either a digital telephone or an analog telephone system with VOIP conversion is linked into the surveillance system and transmissions therefrom are treated as an event requiring an emergency response from the system. By way of example, in my aforementioned copending application activation of various classes of sensors and appliances will trigger specific types of responses and send the data to an appropriate response team. The activation will also initiate follow-up activity within the system, such as, by way of example, activating cameras to start the transmission of live video from the scene or zone where the sensor or appliance is located. Additional actions are also initiated including, but not limited to: mapping the area where the event occurred; providing flashing icons on a screen map showing the location of the event; sending programmed informational data transmissions to the scene; locking or unlocking secure doors depending on the event, and various other response functions.

[0021] The subject invention is specifically directed to integration of emergency telephone systems to take full advantage of a multi-media surveillance system and to permit comprehensive and multiple responses to an event triggered by receipt of the emergency phone call transmission. The subject invention captures the telephone transmission and transmits it to the surveillance system processor. Upon receipt, the system can react with any of numerous responses. First, the telephone call is transmitted to a manned station and may be answered in the normal fashion with a live voice response. The receipt of the call also activates the entire system in the same manner as a triggering signal from any other sensor or appliance. This may activate cameras focused on the location of the telephone for transmitting live video data to the manned station as well as to the system server for management and for archiving both the audio and video data. In addition, various other responses may be activated, either manually or in a pre-programmed hierarchy. For example, if the telephone call is not answered within a certain number of rings, it can be automatically sent to a second level priority and so on. The video of the scene is immediately presented on the manned station screen, permitting the response personnel to monitor the events while communicating with the person initiating the call. In addition, the live or archived data may be sent via a network, including LANs, WANs and the Internet, to remote stations for monitoring and response.

[0022] Various sensors and appliances may be combined with the emergency telephone system in this manner, greatly

enhancing the response to the call while at the same time permitting response personnel to monitor the call for accuracy and authenticity.

[0023] An additional feature of the invention is to permit immediate response from various response stations anywhere on the security system network. For example, the call may be sent via both wired and wireless transmission systems to any station. One important feature is that the emergency call can be sent directly to roving personnel via a wireless PDA or other handheld device, virtually eliminating the likelihood of no answer. The PDA includes full functionality with voice response and with a monitor to provide assessment of the situation. This capability is also more fully described in my aforementioned copending application.

[0024] It is, therefore, an object and feature of the subject invention to provide for enhancement of emergency telephone systems by incorporating such systems directly into an interactive security system.

[0025] It is also an object and feature of the subject invention to provide for the capability of monitoring and assessing the situation at the location from which the call is generated.

[0026] It is an object and feature of this invention to flash an icon on the map indicating the position of the specific emergency telephone based on an emergency telephone being accessed.

[0027] It is a further object and feature of the subject invention to provide for archiving the call and additional data for later retrieval purposes.

[0028] It is an additional object and feature of the subject invention to provide for a hierarchy for answering incoming emergency calls to assure that if the first priority recipient does not respond additional recipients are contacted in an established priority.

[0029] It is an object and feature of this invention to utilize off-the-shelf IP telephones and/or IP analog telephone adapters as emergency telephones for origination of emergency calls in a comprehensive multimedia security system.

[0030] It is an object and feature of this invention to utilize off-the-shelf IP telephones and/or IP analog telephone adapters as response telephones for answering emergency calls in a comprehensive multimedia security system.

[0031] It is an object and feature of this invention to utilize off-the-shelf IP telephones and/or IP analog telephone adapters as intercommunication telephones between two or more monitoring stations in order for multiple response personnel to hear emergency calls simultaneously.

[0032] It is an object and feature of this invention to utilize off-the-shelf IP telephones and/or IP analog telephone adapters as intercommunication telephones between two or more monitoring stations in order for multiple response personnel to discuss emergency response actions among themselves.

[0033] It is an object and feature of this invention to utilize off-the-shelf IP telephones and/or IP analog telephone adapters as intercommunication telephones to monitor audio sensors in IP security appliances.

[0034] It is an object and feature of this invention to utilize off-the-shelf IP telephones and/or IP analog telephone adapters as intercommunication telephones to speak to IP security appliances that are equipped with loud speaker output transducers.

[0035] It is an object and feature of this invention to utilize off-the-shelf IP telephones and/or IP analog telephone adapters to recall stored audio information that has been recorded in a comprehensive multimedia database, and to recall data that is associated with it.

[0036] It is an object and feature of this invention to utilize off-the-shelf IP telephones and their advanced display capability to display real time alarm events by name, location, type and description in textual and graphical forms.

[0037] It is an object and feature of this invention to utilize off-the-shelf IP telephones and their advanced display capability to display information on the IP telephone related to prerecorded alarm events by time, name, location, type and description in textual and graphical forms.

[0038] It is an object and feature of this invention to utilize off-the-shelf IP telephones and their advanced display capability to display a map on the IP telephone showing the alarm location.

[0039] It is an object and feature of this invention to utilize off-the-shelf IP telephones and their advanced display capability to display a bar graph on the IP telephone showing the relative location of voice during playback of a pre-recorded audio event.

[0040] It is an object and feature of this invention to utilize off-the-shelf IP telephones and their advanced display capability to display real-time events by name, location, time and the like on the IP telephone as they are happening, such as door access/denials, alarm sensors triggering, and the like. Audio, if available, will be presented synchronized with the text/graphical display.

[0041] It is an object and feature of this invention to utilize off-the-shelf IP telephones and their advanced display capability to display pre-recorded events by name, location, time and the like on the IP telephone as they are happening, such as door access/denials, alarm sensors triggering, and the like. Audio, if available, will be presented synchronized with the test/graphical display.

[0042] It is an object and feature of this invention to utilize the processing element that provides IP voice applications to host the voice processing functions of the comprehensive multimedia security system.

[0043] It is an object and feature of this invention to utilize the processing element that provides IP voice applications to provide the audio switching/connection functions of the comprehensive multimedia security system.

[0044] It is an object and feature of this invention to utilize the processing element that provides IP voice applications including the voice mail functions, to provide the audio recording and playback functions of the comprehensive multimedia security system.

[0045] It is an object and feature of this invention to provide for an audio search capability allowing for searching by voice recognition, then playback of all multimedia data such as audio, video, and textual event data from the key point found by voice recognition.

[0046] It is an object and feature of this invention to provide for an audio search capability allowing for searching by audio processing seeking events such as gunshots, loud noises, screams, and the like, then playback of all multimedia data such as audio, video, and textual event data from the key point found by audio processing.

[0047] It is an object and feature of this invention to utilize the IP audio capability of a PC that is being utilized as a monitor station to interact with analog telephones, digital telephones, IP telephones, and security sensors for the purpose of monitoring the audio data.

[0048] It is an object and feature of this invention to utilize the IP audio capability of a PC that is being utilized as a monitor station as response telephone for answering emergency calls in a comprehensive multimedia security system.

[0049] It is an object and feature of this invention to utilize the IP audio capability of PCs that are being utilized as a monitors as a telephone as intercommunication telephones between two or more monitoring stations in order for multiple response personnel to hear emergency calls simultaneously.

[0050] It is an object and feature of this invention to utilize the IP audio capability of PCs that are being utilized as a monitors as intercommunication telephones between two or more monitoring stations in order for multiple response personnel to discuss emergency response actions among themselves.

[0051] It is an object and feature of this invention to utilize the IP audio capability of PCs that are being utilized as a monitors as telephones to intercommunicate with as IP Telephones and/or IP analog telephone adapters in order for multiple response personnel to hear emergency calls simultaneously.

[0052] It is an object and feature of this invention to utilize the IP audio capability of PCs that are being utilized as a monitors as intercommunication telephones to monitor audio sensors in IP security appliances.

[0053] It is an object and feature of this invention to utilize the IP audio capability of PC's that are being utilized as a monitors as intercommunication telephones to speak through speakers in IP security appliances.

[0054] It is an object and feature of this invention to utilize the IP audio capability of PC's that are being utilized as a monitors as intercommunication telephones to speak to IP security appliances that are equipped with loudspeaker output transducers.

[0055] It is an object and feature of this invention to utilize the IP audio capability of PCs that are being utilized as a monitors to recall stored audio information that has been recorded in a comprehensive multimedia database, and to recall data that is associated with it.

[0056] It is an object and feature of this invention to utilize a PDA configured with a wireless LAN module and Voice-Over-IP speaker and microphone to operate as a mobile guard station.

[0057] It is an object and feature of this invention to utilize a PDA configured with a wireless LAN module and Voice-Over-IP speaker and microphone to operate as monitor for listening to IP appliances equipped with IP microphones.

[0058] It is an object and feature of this invention to utilize a PDA configured with a wireless LAN module and Voice-Over-IP speaker and microphone to be utilized as an intercommunication telephone to speak to IP security appliances that are equipped with loudspeaker output transducers

[0059] It is an object and feature of this invention to utilize a PDA configured with a wireless LAN module and Voice-Over-IP speaker and microphone to be utilized as an intercommunication telephone to speak to other monitor stations of the PC type or of the wireless PDA type for the purposes of intercommunicating about security breaches, alarm events and other matters.

[0060] It is an object and feature of this invention to provide an IP security telephone that is encased in a protective housing and that encodes Voice-Over-IP.

[0061] It is an object and feature of this invention to provide an IP security telephone that is encased in a protective housing and that encodes Voice-Over-IP and that generates alarm events communicated over IP in when the door is opened.

[0062] It is an object and feature of this invention to provide an IP security telephone that is encased in a protective housing and that encodes Voice-Over-IP and that generates alarm events communicated over IP in when the handset is lifted off of its restraint.

[0063] It is an object and feature of this invention to provide an IP security telephone that is encased in a protective housing and that encodes Voice-Over-IP and that has a display that is presented with data over IP and displayed with a micro browser such as is utilized on IP desk telephones.

[0064] It is an object and feature of this invention to configure alarm appliance such that they can communicate to an IP telephony processing system in a manner compatible with IP telephones.

[0065] It is an object and feature of this invention to configure alarm appliance such as a multimedia camera appliance such that it can communicate to an IP telephony processing system in a manner consistent with IP telephones, and originate emergency calls to a specified emergency monitor station or stations.

[0066] It is an object and feature of this invention to utilize voice recognition to select actions based upon detection of key words, such as detecting the word "police" signaling the police guard station, "fire" signaling the fire department station, "heart attack" or "blood" or "hurt" or "broken" signaling the EMS station, and the like.

[0067] It is an object and feature of this invention to flash an icon on the map indicating the position of the specific emergency telephone based on an emergency telephone being spoken into utilizing voice amplitude threshold detection (VOX).

[0068] It is an object and feature of this invention to flash an icon on the map indicating a guard station response, which is indicated by a guard pushing a button, speaking into a microphone utilizing voice amplitude threshold detection (VOX), or speaking into a POTS telephone with IP adapter or speaking into an IP telephone.

[0069] It is an object and feature of this invention to utilize Voice Activated Recording™ to gate the audio onto the Server in order to reduce the amount of storage space required. The data stream will be stamped with time information such that during playback exact recording time may be determined.

[0070] It is an object and feature of this invention to provide for a buffer status "bar graph" to indicate health of transmitted and/or received audio data in a manner previously described for video in my aforementioned pending applications..

[0071] It is an object and feature of this invention to provide an emergency telephone with a built-in LAN interface.

[0072] It is an object and feature of this invention to provide an emergency telephone with a built-in WAN interface.

[0073] It is an object and feature of this invention to provide an emergency telephone with a built-in wireless LAN interface.

[0074] It is an object and feature of this invention to provide an emergency telephone with a built-in LAN HUB.

[0075] It is an object and feature of this invention to provide an emergency telephone with a built-in camera.

[0076] It is an object and feature of this invention to provide an emergency telephone with a built-in camera interface for an associated external analog video camera.

[0077] It is an object and feature of this invention to provide an emergency telephone with a built-in camera interface for an associated external digital video camera.

[0078] It is an object and feature of this invention to provide a specialized IP video camera that is configured for hosting an interface for an associated analog or POTS emergency telephone.

[0079] It is an object and feature of this invention to provide a specialized IP video camera that is configured for hosting an interface to an associated digital emergency telephone.

[0080] It is an object and feature of this invention to provide a specialized IP video camera that has an internal LAN HUB. It is an object and feature of this invention to provide a specialized IP video camera that has a built-in WAN interface.

[0081] It is an object and feature of this invention to provide a specialized emergency telephone modem that has a built-in interface for an analog camera and a built in interface for a built-in analog or POTS telephone.

[0082] It is an object and feature of this invention to provide a specialized emergency telephone modem configured with a LAN interface that has a built-in interface for an analog camera and a built in interface for a built-in analog or POTS telephone.

[0083] It is an object and feature of this invention to provide a specialized emergency telephone modem configured with a WAN interface that has a built-in interface for an analog camera and a built in interface for a built-in analog or POTS telephone.

[0084] It is an object and feature of this invention to provide a specialized emergency telephone modem configured with a wireless LAN interface that has a built-in interface for an analog camera and a built in interface for a built-in analog or POTS telephone.

[0085] It is an object and feature of this invention to configure an emergency telephone to receive power over a LAN connection in a well-known manner to power the emergency telephone.

[0086] It is an object and feature of this invention to configure an emergency telephone to receive power over a WAN connection in a well-known manner to power the emergency telephone's associated camera.

[0087] It is an object and feature of this invention to configure an emergency telephone to receive power over a WAN connection in a well-known manner to power the emergency telephone.

[0088] It is an object and feature of this invention to configure an emergency telephone to receive power over a LAN connection in a well-known manner to power the emergency telephone's associated camera.

[0089] It is an object and feature of this invention to utilize Session Initiated Protocol (SIP) to establish and maintain voice connections between emergency telephones and fixed guard stations.

[0090] It is an object and feature of this invention to utilize Session Initiated Protocol (SIP) to establish and maintain voice connections between emergency telephones and wireless guard stations.

[0091] It is an object and feature of this invention to utilize Session Initiated Protocol (SIP) to establish and maintain voice connections between guard stations.

[0092] It is an object and feature of this invention to utilize Session Initiated Protocol (SIP) to establish and maintain voice connections between guard stations and standard telephone networks and telephones.

[0093] It is an object and feature of this invention to utilize Session Initiated Protocol (SIP) to establish and maintain voice connections between multiple voice elements, including guard stations, emergency telephones, and standard telephones.

[0094] It is an object and feature of this invention to utilize Session Initiated Protocol (SIP) to establish voice links between security sensors that have audio capability for monitoring and guard stations or telephones.

[0095] It is an object and feature of this invention to utilize Session Initiated Protocol (SIP) to provide event notification from sensors to clients, such as guard stations, that an event of interest should be monitored.

[0096] It is an object and feature of this invention to utilize Session Initiated Protocol (SIP) to provide an indication of a failure of event notification from sensors to clients, such as guard stations, that an event of interest should be monitored and why the failure occurred (i.e. no answer, circuit not available, and the like).

[0097] It is an object and feature of this invention to utilize Session Initiated Protocol (SIP) to provide initiation of an audio stream from a security sensor appliance that is equipped with an audio transducer.

[0098] It is an object and feature of this invention to utilize Session Initiated Protocol (SIP) to provide initiation of a video stream from a security sensor appliance that is equipped with a video transducer.

[0099] It is an object and feature of this invention to utilize Session Initiated Protocol (SIP) to provide initiation of a step-video stream from a security sensor appliance that is equipped with a video transducer.

[0100] It is an object and feature of this invention to utilize SIP Proxy servers for information security authentication and authorization of connection to security sensor appliances and/or guard stations or elements utilized as monitor points.

[0101] It is an object and feature of this invention to utilize SIP redirector servers for routing security messages from location to location.

[0102] It is an object and feature of this invention to utilize SIP registrar servers to process requests from security appliances or guard stations for registration of their current location.

[0103] It is an object and feature of this invention to utilize SIP gateways to provide connection control between security appliances, security guard stations, SIP endpoints and other terminal types.

[0104] It is an object and feature of this invention to utilize SIP gateways to provide translation functions as required including audio and video CODEC translations between security appliances, security guard stations, SIP endpoints and other terminal types.

[0105] It is an object and feature of this invention to utilize H.323 Protocol to establish and maintain voice connections between emergency telephones and fixed guard stations.

[0106] It is an object and feature of this invention to utilize H.323 Protocol to establish and maintain voice connections between emergency telephones and wireless guard stations.

[0107] It is an object and feature of this invention to utilize H.323 Protocol to establish and maintain voice connections between guard stations.

[0108] It is an object and feature of this invention to utilize H.323 Protocol to establish and maintain voice connections between guard stations and standard telephone networks and telephones.

[0109] It is an object and feature of this invention to utilize H.323 Protocol to establish and maintain voice connections between multiple voice elements, including guard stations, emergency telephones, and standard telephones.

[0110] It is an object and feature of this invention to utilize H.323 Protocol to establish voice links between security sensors that have audio capability for monitoring and guard stations or telephones.

[0111] It is an object and feature of this invention to utilize H.323 Protocol to provide event notification from sensors to clients, such as guard stations, that an event of interest should be monitored.

[0112] It is an object and feature of this invention to utilize H.323 Protocol to provide an indication of a failure of event notification from sensors to clients, such as guard stations, that an event of interest should be monitored and why the failure occurred (i.e. no answer, circuit not available, and the like).

[0113] It is an object and feature of this invention to utilize H.323 Protocol to provide initiation of an audio stream from a security sensor appliance that is equipped with an audio transducer.

[0114] It is an object and feature of this invention to utilize H.323 Protocol to provide initiation of a video stream from a security sensor appliance that is equipped with a video transducer.

[0115] It is an object and feature of this invention to utilize H.323 Protocol to provide initiation of a step-video stream from a security sensor appliance that is equipped with a video transducer.

[0116] It is an object and feature of this invention to utilize H.323 Protocol gateways to provide connection control between security appliances, security guard stations, SIP endpoints and other terminal types.

[0117] It is an object and feature of this invention to utilize H.323 Protocol gateways to provide translation functions as required including audio and video CODEC translations between security appliances, security guard stations, SIP endpoints and other terminal types.

[0118] Other objects and features of the subject invention will be readily apparent from the accompanying drawings and description.

BRIEF DESCRIPTION OF THE DRAWINGS

[0119] FIG. **1** is a diagram showing certain features of a surveillance system and an emergency telephone system in combination therewith.

[0120] FIG. **2** is similar to FIG. **1** showing analog telephone conversion capability.

[0121] FIG. **3** shows a system as illustrated in FIG. **1**, adapted for incorporating a multi-station emergency telephone network.

[0122] FIG. **4** is a modification showing the use of IP emergency telephones with a power inserter and a hub for driving the emergency telephone system and certain appliances such as the illustrated cameras.

[0123] FIG. **5** is an illustration of a system wherein the legacy emergency telephone is replaced by a speaker and microphone appliance for use as an entry sentry device.

[0124] FIG. **6** is an illustration of a system having a dual monitor guard station with VOIP telephone connected to an IP network.

[0125] FIG. **7** is an illustration of a system having multiple dual monitor guard stations having a microphone and speaker communications system.

[0126] FIG. **8** is an illustration of a multiple manned station system. Note the multiple voice IP capability between all stations.

[0127] FIG. **9** is an illustration of a PDA handheld device for origination and receiving of VOIP calls in accordance with the subject invention.

[0128] FIG. **10** is an illustration of a comprehensive multifunctional unit for VOIP connectivity.

[0129] FIG. **11**A is a flow diagram of circuitry for connecting the emergency telephone to the surveillance system utilizing IP technology.

[0130] FIG. **11**B is a flow diagram of circuitry for connecting the emergency telephone to the surveillance system utilizing wireless IP technology.

[0131] FIG. **12**A is an illustration of a VOIP telephone system with companion video over a LAN.

[0132] FIG. **12**B is a flow diagram of the circuitry for the system of FIG. **12**A.

[0133] FIG. **13**A is an illustration of a system similar to FIG. **12**A, adapted for a WAN.

[0134] FIG. **13**B is a flow diagram of the circuitry for the system of FIG. **13**A.

[0135] FIG. **14**A is a an illustration of a system having wireless units and a transmitter system for a VOIP telephone with companion video.

[0136] FIG. **14**B is a flow diagram of the circuitry for the system of FIG. **14**A.

[0137] FIG. **15**A shows multiple, mixed units in a system, connected over a LAN.

[0138] FIG. **15**B is a flow diagram of the circuitry for the system of FIG. **15**A.

[0139] FIG. **15**C is an optional flow diagram of the circuitry for the system of FIG. **15**B, with an internal camera.

[0140] FIG. **16**A is similar to FIG. **15**A for a WAN.

[0141] FIG. **16**B is a flow diagram of the circuitry for the system of FIG. **16**A.

[0142] FIG. **17**A is an illustration of a system having wireless units and a transmitter system for a VOIP telephone, with an internal camera.

[0143] FIG. **17**B is a flow diagram of the circuitry for the system of FIG. **17**A.

[0144] FIG. **18**A is an illustration of a system having VOIP with companion video using a switching hub.

[0145] FIG. **18**B illustrates the LAN interface configuration for the system of FIG. **18**A.

[0146] FIG. **18**C illustrates the LAN interface configuration for a system similar to FIG. **18**A, but having an internal camera.

[0147] FIG. **19**A is an illustration of a system having a VOIP telephone with an internal LAN hub and a companion IP camera.

[0148] FIG. **19**B illustrates the LAN interface configuration for the system of FIG. **19**A.

[0149] FIG. **19**C illustrates the LAN interface configuration for a system similar to FIG. **19**A, but having an internal camera.

[0150] FIG. **20**A is an illustration of a system for a VOIP telephone with an internal LAN modem and hub for an IP camera.

[0151] FIG. **20**B illustrates the basic WAN configuration for the system of FIG. **20**A.

[0152] FIG. **20**C illustrates the basic WAN VOIP telephone configuration for the system of FIG. **20**A.

[0153] FIG. **20**D illustrates the basic WAN VOIP telephone configuration for the system of FIG. **20**A with an integral LAN hub.

[0154] FIG. **20**E illustrates the basic WAN VOIP telephone configuration for the system of FIG. **20**A with an integral LAN hub and an internal camera.

[0155] FIG. **21**A is an illustration of a wireless VOIP telephone and companion wireless video.

[0156] FIG. **21**B is an illustration of the flow diagram for the circuitry of FIG. **21**A.

[0157] FIG. **21**C is an illustration of the flow diagram for the circuitry of FIG. **21**A, with an internal camera.

[0158] FIG. **22**A is a system similar to that of FIG. **21**A, with a switched hub.

[0159] FIG. **22**B is an illustration of the flow diagram for the circuitry of FIG. **22**A.

[0160] FIG. **22**C is an illustration of the flow diagram for the circuitry of FIG. **22**A, with an internal camera.

[0161] FIG. **23**A is an illustration of a VOIP telephone and companion video system for a WAN.

[0162] FIG. **23**B is an illustration of the flow diagram for the circuitry of FIG. **23**A.

[0163] FIG. **23**C is an illustration of the flow diagram for the circuitry of FIG. **23**A, with an internal camera.

[0164] FIG. **24**A is an illustration of a system similar to that of FIG. **23**A, with a switched hub.

[0165] FIG. **24**B is an illustration of the flow diagram for the circuitry of FIG. **24**A.

[0166] FIG. **25**A is an illustration of an analog telephone or a POTS telephone with an integrated LAN and VOIP encoder and companion video.

[0167] FIG. **25**B is an illustration of the flow diagram for the circuitry of FIG. **25**A.

[0168] FIG. **26**A is an illustration of an analog telephone with companion IP video with the analog telephone signal converted to IP in an internal converter in the companion video unit.

[0169] FIG. **26**B is an illustration of the flow diagram for the circuitry of FIG. **26**A.

[0170] FIG. **27**A is a wireless version of the system of FIG. **26**A.

[0171] FIG. **27**B is an illustration of the flow diagram for the circuitry of FIG. **27**A.

[0172] FIG. **28**A is an illustration of an optional VOIP telephone system having companion and internal video configured for a WAN.

[0173] FIG. **28**B is an illustration of the flow diagram for the circuitry of FIG. **28**A, with companion video.

[0174] FIG. **28**C is an illustration of the flow diagram for the circuitry of FIG. **28**A, with internal video.

[0175] FIGS. **29**A-D are schematics of the processor, RAM and NVM for the circuits of the various embodiments.

[0176] FIG. **30** is a schematic of the audio interface for the circuits of the various embodiments, specifically the emergency telephone audio circuits.

[0177] FIGS. **31**A-C are schematics of the LAN interface for the circuits of the various embodiments.

[0178] FIGS. **32**A-D are schematics of the WLAN interface for the circuits of the various embodiments.

[0179] FIGS. **33**A-F are schematics of the video interface for the circuits of the various embodiments.

[0180] FIG. **34** is a schematic of the power supply for the circuits of the various embodiments.

[0181] FIG. **35** is an illustration of a system interconnect for voice gateways implemented with an SIP VOIP, network.

[0182] FIG. **36** is a diagram of an SIP request path through a proxy server, supporting the system of FIG. **35**.

[0183] FIG. **37** shows the SIP response path through a proxy server.

[0184] FIG. **38** shows an SIP session through a proxy server.

[0185] FIG. **39** shows an SIP request through a redirect server.

[0186] FIG. **40** shows an SIP session through a redirect server.

[0187] FIG. **41** is an illustration of SIP gateway-to-gateway call via an SIP proxy server with a record route.

[0188] FIG. **42** shows a gateway-to-gateway call with call redirection.

[0189] FIG. **43** shows an SIP gateway-to-SIP gateway call setup.

[0190] FIG. **44** is a representation of recorded surveillance audio data being searched to generate an index into a comprehensive multimedia database.

[0191] FIG. **45** is a representation of how voice recognition routes signaling among multiple monitoring stations.

DETAILED DESCRIPTION OF THE PREFERRED EMBODIMENTS

[0192] A typical surveillance system as more fully described in my aforementioned copending application is shown in FIG. **1** and includes, in this example, IP cameras C**1**, C**2**, C**3**, C**4** and C**5**; a pair of manned guard station No. **1** and No. **2** on the intranet or LAN **10**; a system server **12** also on the intranet **10**; a gateway **14** to the Internet or other Wide Area Network (WAN) **16** and remote support such as the remote monitor station **18**. An emergency IP voice telephone **20** is connected to the system via the intranet **10**. In this embodiment, the emergency telephone sends IP protocol voice transmissions to the system via the intranet, where the system can capture the incoming call signal and transmit it to the various guard stations No. **1** and No. **2** and, via the Internet **16**, to the remote station **18**. This transmission can be done simultaneously or in a hierarchal order, as preferred and as managed by the server **12**. In addition, once the incoming call is received, the location of the telephone **20** is identified and the appropriate IP cameras C**1** and C**2** are activated to start transmitting video data to the stations and to the server. This permits the guard personnel to quickly monitor and assess the situation at the monitor screens provided at each of the various stations. The personnel at each of the stations may communicate directly with the caller at the emergency telephone **20** via the microphone/speaker system **22**, **24** as provided at guard station No. **2** or via a VOIP telephone **26** as provided at guard station No. **1** or the remote station **18**. The emergency call can be received and heard by guard stations No. **1**, No. **2** and No. **3** simultaneously. Any or all of the three guard stations can respond to the caller at emergency telephone **20** by pushing their push-to-talk at their station, or if desired by activating voice operated switching (VOX) by speaking. Further, if one guard station is responding with voice, all of the other guard stations will hear the audio from the responding station. Audio is enabled by more than one station by an audio bridge function in a well-known manner consistent with IP telephony. This function can operate on any processing node

on the system capable of audio bridging, but the preferred embodiment would implement this function on the security server element **12**. It can also be implemented on a different element than the security server **12**, for example could be implemented on the corporate IP telephone processing system (not shown). Additional surveillance activity may also be initiated by the call in accordance with the full capability of the system described in my aforementioned copending application. For example, a map on one of the monitors at each station may include a flashing icon showing the location of the emergency call. It also can flash based on voice (VOX) activation, from the emergency telephone **20**. Audio response from guard stations No. **1**, **2** and **3** can also trigger VOX which will flash the icon for that respective guard station that had audio. Also, various security functions may be performed such as securing the facility or opening escape doors. Response instructions may be sent to response teams either automatically based on programmed responses or voice recognition of key words from the emergency telephone **20** or manually selected by the response personnel. In sum, the incorporation of the emergency telephone system into the surveillance network permits the telephone to be used as a full function appliance as with the many other sensors and appliances on the system.

[0193] A modification of the system is shown in FIG. **2**, wherein a legacy analog telephone **30** may be connected to the system using a Voice Over IP converter appliance **32** for converting the voice signal to IP protocol. The station telephones **34** may also be analog telephones connected with a converter **32**. Signaling from the analog telephone can be generated by the telephone going off-hook, by special contacts provided in the enclosure of emergency telephone **30**, and can be further enhanced by performing voice recognition on the voice stream coming from the emergency telephone **30**.

[0194] A modification showing the incorporation of an existing emergency telephone network of multiple telephones is shown in FIG. **3**. An example of this system may be the use of an emergency telephone in each of a plurality of elevator cars in a large building. In this system a plurality of emergency telephones E**1**-E**4** are connected through a PBX switch **36**. A single VOIP converter gateway device **38** is required to convert the call transmissions to IP protocol. In this embodiment, other analog telephones are also support such as the independent telephone **40** and various other components such as facsimile machines and the like. Also, the original response telephone **42** may be used in combination with a typical manned station **19**. One advantage to this configuration is that the system may be readily expanded by connecting additional analog telephones to the PBX switch **36** or by connecting compatible VOIP telephones such as telephone E**5** directly to the intranet via the power inserter **42** and hub **44** which is used to connect the various IP cameras C**1**, C**2**, C**3** and C**4**. It should be noted that the power inserter **42** is not required if each of the components have local power. It should also be noted that the camera does not need to be a separate component but could be imbedded in compatible telephones such as the VOIP telephone E**5**. Analog cameras can also be utilized with IP encoders in a manner as disclosed in my other applications. The PBX **36** utilizes a data gateway **39** to transmit call identification information such as Caller ID (CLID) to the monitor stations. This can be utilized to announce the particular emergency telephone that is originating the call and to activate icons on a floor plan associated with individual emergency telephones.

[0195] A multiple unit VOIP telephone system configuration is shown in FIG. **4**. In this configuration all of the emergency telephones E**1**, E**2** and E**3** are VOIP telephones connected directly to the intranet via the power inserter **42** and hub **44**, as are the various IP cameras C**1**-C**6**. Additional VOIP telephones such as telephone E**4** may be added with or without the cameras. This is a "pure" IP solution and therefore is the preferred embodiment of the appliance implementations allowing for great flexibility in deployment over an IP network that is configured for multiple rooms, buildings, and widespread geographic locations. The same switches, routers, and circuits that are providing an enterprise wide computer interconnection can be utilized for multimedia security integrated with voice over IP.

[0196] One advantage of the voice over IP technology is that other voice devices may be connected in addition to or as an alternative to the emergency telephone systems. As shown in FIG. **5**, a speaker/microphone system **46** with VOIP capability can be used in connection with a door access control system such as the strike control **48**, the card swipe **50**, or other similar access control device. This permits the personnel at station **1** to communicate with an individual seeking access through the door. The related cameras C**1** and C**2** also give visual monitoring capability. One method of use is as follows. A person swipes his card at **50**. The server (not shown) will verify the validity of the card and open the door after utilizing the IP electric strike **48**. As an extension of the process, the swiping of the card can signal the guard station **1** and flash the image of the person desiring entry with cameras C**1**, C**2** and C**3** in the intercom unit. The unlocking of the door would be blocked. Images from the cameras will be stored on the server. The database will pull up the information about the person desiring entry and display it on the guard station **1**. The guard can then decide to authorize entry (or not) and unlock the electric IP strike **48** (or not). If the guard desired to communicate with the person desiring entry, a VOIP session would be established between guard station **1** VOIP telephone and the IP intercom module **46**. A camera directly on the intercom module C**3** can provide a close-up image of the subject.

[0197] As another example, a person not having a badge at all can request entry by depressing PTT button on intercom **46**. This will generate an event and signal the guard station **1**. The guard can then respond utilizing IP and carry on a conversation with the subject at intercom **45**. The images from cameras C**1**, C**2** and C**3** are being recorded on the database. The guard can decide to send the command to electric strike **48** (or not) and unlock the door (or not). The voice from the guard at station **1** and the voice of the person at the door speaking into intercom **46** can be recorded as VOIP on the multimedia server. This recorded voice can be played back with time information later in an investigation, and can be played back in synchrony with video and/or images captured by cameras C**1**, C**2** and C**3**, and events such as PTT button pushes such as PTT on intercom **46**.

[0198] It will be noted that the power inserter **42** and the hub **44** can be replaced with a powered hub **50**, as desired. Industry standards are currently being developed for powered IP devices, but are not yet in place. The techniques available for power insertion are outline in my aforementioned copending applications. Also, it should be noted that the powered hub

or power inserter is not required where local power is supplied to each device. This is true for all of the various configurations disclosed herein.

[0199] An enlarged view of guard station No. **1** (FIG. **1**) is shown in FIG. **6**. The processor **90** is connected to the network **10** and includes typical input devices such as the keyboard **92** and the mouse or trackball **94**. The processor supports two or more monitors **96** and **98** to permit full screen view of multiple cameras and to permit one monitor to be used for displaying a camera transmission while the other is used for system data such as a system map or the like. In this configuration a VOIP telephone **26** is used to communicate with the integrated emergency telephone system. Both the digitized voice and the digitized sensor data such as encoded camera data is communicated over network **10**.

[0200] Guard station No. **2** (FIG. **1**) is shown in FIG. **7**. It is the same in all respects to guard station No. **1** with the exception that the VOiP telephone is replaced with the more typical microphone **22** and speaker **24**. Half duplex operation (PTT or VOX) is preferred. The microphone may have a push-to-talk button **23** integral to the microphone, or the buttons on the mouse **94** can be utilized for Push-To-Talk (PTT). Voice Operated Switching (VOX) can also be utilized, or full duplex operation (less desirable, particularly in multi-station installations.)

[0201] FIG. **8** shows a typical system with multiple emergency VOIP telephones E**1** and E**2**, with at least one of the telephones (here telephone E**2**) having cameras C**1** and C**2** focused on the zone surrounding it. All components are connected via the intranet **10** to server **12** and two LAN guard stations GS**1** and GS**2** and a remote guard station GS**3** via the Internet **16**. During an emergency call, multiple guard stations can be alerted when the door of the emergency telephone is opened, when the handset is picked up, or when a button is pushed. During the call the voice of the subject at emergency telephone E**2** would be communicated over IP to one or more guard stations. The broadcast protocol easily enables transmitting voice to all stations. Unicast from the emergency telephone E**2** to the server **12**, followed by unicast transmissions to the individual guard stations can then be implemented. A hybrid of unicast and broadcast can be beneficial when, for example, GS**1** and GS**2** are both on a local network that does not have quality of service (QOS) issues. The station GS**3**, on the other hand, does have QOS issues such as packets being delivered out of sequence because it is being delivered over the Internet through an unspecified plurality of switches and routers. In this case transmitting unicast to the guard station GS**3** is an advantage.

[0202] Note that not only can guard stations GS**1**, GS**2** and GS**3** can listen to audio from emergency telephone E**2**, they can talk back to E**2** utilizing their microphones. Any or all guard stations can call back in a "junkyard" technique. That is all stations on the network can hear all other stations on the net when they talk. Again, this can be implemented by all stations utilizing multicast in transmitting their signaling and audio, or by utilizing a server such as server **12** as a conference bridge.

[0203] In the preferred embodiment, in all cases the audio from all emergency telephones and all guard stations will be recorded on server **12** for future investigative playback. Additional data would also be recorded to allow exact determination of time and determination of which telephone or guard station is recording. Voice Activated Recording™ would be utilized to reduce data required on the security database.

[0204] FIG. **9** shows a typical PDA **100** having a wireless LAN access card for receiving data from the system via a wireless access point, as described in my aforementioned copending application. The Wireless LAN (WLAN) standards **802.11**, **802.11**A, **802.11**B or any subsequent standard may be implemented. The PDA includes a monitor display screen **102**, a microphone **104** and a speaker **106**. This permits a roving guard to communicate directly with the emergency telephone user even when not present at the permanent guard station, station **1** or station **2**. Voice transmit and receive data would be communicated with digitized compressed voice such as the popular G.711 and G.723.1 audio compression for low-bandwidth requirements. The voice data streams would be transmitted over the WLAN. The voice would be communicated in exactly the same manner as has been described for the wired monitor and guard stations in this application. Other multimedia data would displayed on the PDA display **102**. This includes textual data, images, and fall motion streams such as MPEG-1 or MPEG-4. These streams also would be communicated over the wireless channel in concert with the audio. All multimedia data would be played in a synchronous manner, such that voice, video and data would be largely synchronized.

[0205] Wireless streams are subject to widespread dropouts and distortions from well know RF aberrations such as multipath, noise, absorption, and the like. In order to recover from reception problems, a receive buffer may be utilized. This buffer will ebb and flow with data, filling when the signal is strong and clear, and emptying when the signal is weak or noisy. A bar graph is implemented for the audio, and video as was previously disclosed in my aforementioned earlier application, such that the user of the portable station can be assisted in keeping the signal strong and keep the audio buffer fall to provide for continuous clear audio. In the preferred application, the user would move the PDA to areas to keep the bar graph high. When the user saw the bar falling, they would be alerted to move to improve the signal strength. With the frequencies utilized in **802.11** systems, this may amount to distances of only a few inches.

[0206] FIG. **10** shows an SIP IP telephone configured to be used in conjunction with the system of the subject invention. An example of a suitable SIP telephone is the Cisco Systems' SIP IP Phone for use in VOIP infrastructure solutions. The telephone here described is not novel, per se, but the application in accordance with the overall system of the subject invention is believed to be a novel application. The telephone is described to permit a better understanding of the various features useful when employed by the subject invention. The SIP phone includes an LCD screen **200** for displaying information transmitted in text or video format. The line buttons **202** are used to open a new line in multiple line systems. The information button and keys **204** provide access to phone control information. The control keys **206** are volume control keys and are used to increase or decrease the volume of the handset, headset or speakerphone options. Keys **208** are soft keys used to activate text functions displayed on the LCD screen. Dial pad keys **210** are standard dial pad touch-tone keys. The handset is designated by the numeral **212**. This telephone can be used in any of the various configurations for incorporating a VOIP telephone in accordance with the various embodiments of the invention.

[0207] FIGS. **11**A and **11**B show a basic circuit for connecting a VOIP telephone to a network. Specifically, FIG. **11**A shows a hard-wired LAN configuration and FIG. **11**B

shows a wireless LAN (WLAN) configuration. In both cases, the VOIP telephone includes a handset **60** carried in a suitable housing **62** with a call button or call keypad **73**. In a typical installation the housing will have a suitable door **64**. In these configurations, the telephone is hardwired to an interface via the RJ-45 jack **66**. Handset/cradle contacts **70** are responsive to use of the handset for activating the telephone. When the contacts are activated the control circuit **68** is operational to activate the protocol processor **72**. The handset includes an earphone **74** and associated decoder **76**, and a microphone **78** and associated encoder **80** for transmitting voice data to and receiving voice data from the protocol processor. A door switch or other control switches may also be employed through a status circuit **82** to further control the activation and deactivation of the telephone. The protocol processor communicates with the LAN interface **84**. In the embodiment of FIG. **11**A, power may be provided over the LAN via the transformer **86** and power supply **82** and/or may be powered by auxiliary external power. The configuration of FIG. **11**B for the wireless LAN is identical through the LAN interface **84**, but includes a wireless LAN receiver **85**. The power supply **88** is connected to local external power.

[0208] Power for operating subscriber equipment has been distributed by centralized telephone plants since before the turn of the century. This technique was initially applied to powering carbon granule variable resistance telephone transmitters with batteries in the telephone exchange. This was called "common battery" equipment. Techniques developed for distributing the power over the same pair of wires that the signal was transmitted on. This is called "loop powered" equipment.

[0209] Since the early days of telephony, other devices have been configured to operate over the telephone loop. For example, Plain Old Telephone Service, or POTS, typically distributes—48 VDC central office battery power through a current loop to the subscriber. This is commonly utilized to power the telephone, but is now also utilized to power simple devices such as caller ID units or call blocking devices.

[0210] With the advent of Wide Area Network (WAN) digital subscriber loops, such as T-**1**, ISDN, DSL and the like, powering of subscriber equipment from the central office over the data loop has not been utilized. On the other hand, digital termination devices or "loop extenders" have been powered over the loop. Common loop power conventions include −48 VDC and −130 VDC loop power sources. One such standard for loop power is the TR-TSY-000057 Class A2 standard for powering ISDN or DSL termination devices. An example of a termination device that utilizes this technique is the Digicom BritePort 9100 ADSL Modem. This device draws 7.33 watts at −79 VDC, and is current limited to 55 mA. Another such device is the Adtran TRI-R "Total Reach" ISDN remote unit. This device is a loop powered ISDN Simple Coded-Pulse Amplitude Modulation (SC PAM) modem that is utilized to transport 160 kpbs data to the subscriber end over longer loops without repeaters. Other examples of remote loop termination equipment also exist.

[0211] In the subject invention, the emergency telephone, IP camera, and audio/video analog modem devices described in this invention utilized embedded WAN interfaces such as DSL or ISDN. These devices are configured with internal "WAN Power Tap" circuits that utilize the central office battery, such as TR-TSY-000057 Class A2 standard power, for powering not only the WAN interface, but also the emergency telephone and/or associated camera. This provides ultimate simplicity and lowest cost installation of the emergency telephone and video surveillance camera devices because it is a "one unit" install. In other words, the central office pair that is hosting both two way data and power is brought directly into the security appliance. This minimizes the number of devices to buy, install, protect and maintain. This is particularly attractive for outdoor installations where the pair can be brought directly into the appliance's water resistant housing.

[0212] My aforementioned copending applications discuss powering an IP video camera over the same wiring as the LAN data signal, much in the manner described for the WAN above. The preferred embodiment of the emergency telephone of this invention is also powered in this manner. This recent technique has been adopted by IP Telephony manufacturers such as Cisco Systems, Inc. in their VOIP telephones. An example of this telephone is the model 7960. Cisco at this time utilized a proprietary technique for power insertion on to the LAN wiring. There are industry groups currently defining standard techniques for power insertion that will likely be adopted on a widespread basis.

[0213] The emergency telephone, IP camera, and audio/video analog modem devices described in this invention may utilize embedded LAN interfaces. These devices are configured with internal "LAN Power Tap" for powering not only the LAN interface, but also the emergency telephone and/or associated camera. This again provides ultimate simplicity and lowest cost installation of the emergency telephone and video surveillance camera devices because it is a "one unit" install. In other words, the LAN CAT-5 cable that is hosting both two way data and power is brought directly into the security appliance. This minimizes the number of devices to buy, install, protect and maintain. This is particularly attractive for outdoor installations where the pair can be brought directly into the appliance's water resistant housing.

[0214] FIGS. **12**A-**28**C show various configurations for the system and demonstrate its wide versatility. FIGS. **12**A and **12**B show a typical local or LAN installation and supporting circuitry, respectively. In this configuration each telephone is a standard POTS telephone **300** with a separate companion video camera **302**. The telephone and camera are each hardwired to a LAN interface **304** for communication over the LAN **306**. The basic circuitry modules are shown in FIG. **12**A. The heart of the interface is the processor **308**. The telephone circuitry in the interface module **304** includes the tone decoder/generator **310**, the ring generator **312** and an audio codec **314**. DC power is supplied by over the LAN power tap **316**, external power **318** or an external power supply **320** to the DC transformer **322**. The camera **302** includes a video front-end circuit **324**, and a digital video encoder **326**. The video and voice signals are managed by the processor **308** that is connected to the LAN protocol circuit **328** that is connected to the LAN interface **330**.

[0215] A similar system for a wide area network or WAN **332** is shown in FIGS. **13**A and **13**B. As shown in FIG. **13**B, the LAN interface is replaced with a WAN protocol circuit **335** and a WAN modem **334**. The power split **336** is optional.

[0216] A wireless configuration for either the LAN or WAN is shown in FIGS. **14**A and **14**B. In this configuration the interface module **338** includes a WLAN transceiver **337** and antenna **339** for transmitting a wireless signal to a suitable wireless access point **340** which is connected to the LAN or WAN.

[0217] As shown in FIGS. **15**A, **15**B and **15**C each telephone **300** may include a companion camera **302** or an inte-

gral camera **342** or a combination. In this configuration the LAN interface is an integral part of the telephone component. The circuitry for an external companion camera is shown in FIG. **15**B. The circuitry for a system including an optional integral camera is shown in FIG. **15**C. All of the processing circuitry is self-contained within the housing for the telephone **300**. In this configuration the telephone can include an optional display **344**, such as the LCD display of the telephone of FIG. **10**. An integral camera **346** is shown in FIG. **15**C.

[0218] The same hardware system configured for a WAN is shown in FIGS. **16**A and **16**B, with the LAN interface component being replaced with the WAN protocol circuitry **335**, the WAN interface **333** and the WAN modem **334**. The wireless configuration is shown in FIGS. **17**A and **17**B. In this configuration, the telephone is equipped with an integral WLAN interface **350** that operates in the same manner as the external wireless interface module **338** shown in FIGS. **14**A and **14**B. The cameras may be internal cameras **346**, companion cameras **302**, or a combination. In this configuration the companion camera interface **352** is an integral part of the telephone **300**.

[0219] FIGS. **18**A-C, and FIGS. **19**A-C show various configurations utilizing switched hubs **352**. In the configuration of FIGS. **18**A-C the camera signal is connected directly to the hub. In FIGS. **19**A-C the camera signal is connected to an integral interface provided in the telephone unit. As shown in FIG. **18**A, not all cameras **302** and telephones **300** are required to be connected through the hub **352**. A combination of direct connect and hub connect components may be deployed. FIG. **18**B is a circuit without a camera component and FIG. **18**C includes an integral camera component. FIGS. **19**A-C show a similar set up with the camera interface being an integral component of the telephone, as previously shown in FIGS. **15**A-**17**C.

[0220] An emergency telephone system with a VOIP telephone with an internal LAN modem and hub for an IP camera is shown in FIGS. **20**A-**20**E. In this configuration the telephone **300** includes either or both of a LAN interface and a WAN modem **334** for supporting the telephone **300**, companion camera **302** and/or the integral camera **346**. The basic WAN configuration is shown in FIG. **20**B. The WAN VOIP configuration with internal camera is shown in FIG. **20**C. A WAN VOIP configuration for supporting a companion camera with an internal hub is shown in FIG. **20**D. A comprehensive system for supporting both companion cameras and internal cameras is shown in FIG. **20**E.

[0221] A wireless configuration is shown in FIGS. **21**A-**21**C. In this configuration each companion camera **302** and each telephone **300** is provided with an integral wireless transceiver **350** and antenna **339** for transmitting wireless signals to an access point **340**. The access point is connected to a WAN **332** via a WAN modem **334** or to a LAN **306** via a LAN interface **328**. A basic configuration with companion cameras is shown in FIG. **21**B. The system is adapted to support internal cameras in FIG. **21**C.

[0222] A wireless configuration wherein the telephone **300** includes an internal LAN interface **328** is shown in FIGS. **22**A-**22**C. In this configuration the companion camera includes a transceiver **350** and an antenna **339**. The telephone **300** includes a mated transceiver **350** and antenna **339** for receiving data from and transmitting data to the camera. The separate units may be coupled to a hub **352** or connected directly to the LAN **206** or through a WAN modem **334** to a WAN **332**. A basic system for a companion camera is shown in FIG. **22**B. The system includes an integral camera in FIG. **22**C.

[0223] A wireless system with integral WAN modem is shown in FIGS. **23**A-**23**C. In this configuration the telephone units **300** include an integral WAN modem or interface **333** for connecting the unit and the companion camera **302** and/or integral camera **346** to the WAN **332**. The companion camera **302** is wirelessly connected to the associated telephone unit using mated transceivers **350** and antennas **339**. A basic system with companion cameras is shown in FIG. **23**C. The configuration including the internal camera **346** is shown in FIG. **23**C.

[0224] The configuration of Figs: **24**A-**24**B includes a wireless telephone **300** connected to a companion camera **302** that is connected to the LAN/WAN via a suitable modem **334** or hub **352**. In this instance the telephone data signals are sent to and from the camera via a wireless connection comprising the mated transceivers **350** and antennas **339**. The system may optionally include internal cameras **346**. The version without an internal camera and with direct interconnect to the LAN is shown in FIG. **24**B.

[0225] A companion IP camera is shown in combination with an analog telephone and VOIP encoder in FIGS. **25**A-**25**B. In this configuration an analog or POTS telephone **300** may be connected to a companion camera **302**. Each camera includes an interface component **328** with conversion means for the telephone signal, permitting connection to the WAN/LAN **306**/**332**. As shown in FIG. **25**B the conversion components for converting the telephone signal to IP protocol is contained in the IP camera, specifically the tone generator decoder **310**, ring generator **312**, audio codec **314** and power supply **322**.

[0226] A companion IP camera is shown in combination with a VOIP telephone in FIGS. **26**A-**26**B, and is similar to the system of FIGS. **25**A and **25**B. The camera LAN interface is replaced with a WAN interface **334**. The circuit configuration is shown in FIG. **26**B.

[0227] FIGS. **27**A-**27**B show a wireless configuration similar to the wired version of FIGS. **26**A-**26**B. The transceiver **350** and the antenna **339** are added to each camera **302** for communication with an access point **304** for connection to the LAN/WAN **306**/**332**. The circuit configuration is shown in FIG. **27**B.

[0228] FIGS. **28**A-**28**C show a configuration where both the camera and the telephone are equipped with integral WAN modems. A system with companion cameras is shown in FIG. **28**B. A system including optional internal cameras is shown in FIG. **28**C.

[0229] FIGS. **29**-**34** are schematic diagrams for the various circuits for the each of the configurations. The pin numbers are those of the manufacturer. The processor **30**, including RAM and NVM, is shown in FIGS. **29**A-D. The audio interface is shown in FIG. **30**. The LAN interface is shown in FIGS. **31**A-C. The WLAN interface is shown in FIGS. **32**A-E. The video interfaces are shown in FIGS. **33**A-F. The power supply is shown in FIG. **34**.

[0230] A typical interconnect for voice gateways solution implemented with a Session Initiated Protocol (SIP) VOIP network is shown in FIG. **35**. There are two widespread standards for exchange of streaming multimedia information including voice and video. The oldest standard is the International Telecommunications Union (ITU) multimedia standard H.323. This standard is utilized for both packet tele-

phone applications and for video streaming such as video teleconferencing. The H.323 incorporates sub-standards such as Q.931 for call initiation and signaling, H.245 for call negotiation and Registration Admission and Status (RAS) for session control.

[0231] A more recent standard is Session Initiation Protocol (SIP) that is the Internet Engineering Task Force's standard for multimedia conferencing over IP. SIP is an ASCII character transmission application layer protocol that is utilized to originate, maintain and terminate calls between two or more end points. The control protocol is defined in the RFC 2543 documents.

[0232] There are many analogies between the two multimedia standards:

[0233] Clients must be intelligent for both standards (protocol capable)

[0234] Network Intelligence is provided by servers in SIP, by gatekeepers in H-323

[0235] SIP is based on the Internet/WWW, H.323 is based on Telephony Q.SIG

[0236] SIP Signaling is UDP or TCP, H.323 is also UDP (ver.3) or TCP

[0237] Medial Protocol is RTP in both standards

[0238] Control Data is ASCII in SIP, Binary in H.323

[0239] SIP embodies IETF/IP sub-protocols, H.323 embodies ITU/ISDN sub protocols

[0240] SIP is targeted for wide interoperability; H.323 is limited to telephony carriers.

[0241] Because the Engineering Task Force's Session Initiation Protocol (SIP) is rapidly becoming the industry platform for widespread application of VOIP telephony, adaptation of security applications and appliances to utilize SIP provides an existing and expanding platform on which to implement sophisticated security applications. It also a allows widespread interoperability between the security system with other IP devices supported by SIP, such as VOIP devices. A more in-depth discussion of Session Initiation Protocol (SIP) follows Session Initiation Protocol (SIP) is the Internet Engineering Task Force's (IETF's) standard for multimedia conferencing over IP. SIP is an ASCII-based, application-layer control protocol (defined in RFC 2543) that can be used to establish, maintain, and terminate calls between two or more end points.

[0242] Like other VOIP protocols, SIP is designed to address the functions of signaling and session management within a packet telephony network. Signaling allows call information to be carried across network boundaries. Session management provides the ability to control the attributes of an end-to-end call.

[0243] SIP provides the capabilities to:

[0244] Determine the location of the target end point-SIP supports address resolution, name mapping, and call redirection.

[0245] Determine the media capabilities of the target end point—Via Session Description Protocol (SDP); SIP determines the "lowest level" of common services between the end points. Conferences are establishing using only the media capabilities that can be supported by all ends.

[0246] Determine the availability of the target end point-If a call cannot be completed because the target end point is unavailable; SIP determines whether the called party is already on the phone or did not answer the allotted number of rings. It then returns a message indicating why the target end point was unavailable.

[0247] Establish a session between the originating and target end point—If the call can be completed, SIP establishes a session between the end points. SIP also supports mid-call changes, such as the addition of another end point to the conference or the changing of a media characteristic or codec.

[0248] Handle the transfer and termination of calls-SIP supports the transfer of calls from one end point to another. During a call transfer, SIP simple establishes a session between the transferee and a new end point (specified by the transferring party) and terminates the session between the transferee and the transferring party. At the end of call, SIP terminates the sessions between all parties. Conferences can consist of two or more users and can be established using multicast or multiple unicast sessions.

[0249] With specific reference to FIG. **35**, the heart of the system is the SIP gateway **400** with unified messaging **402**. The SIP telephones **403** are connected to the SIP proxy server **404** via a firewall **403**. Facility security databases **406** are associated with each facility on the system and are connected to the associated proxy server. Signal controllers **408** and links **410** are connected via the gateway **400**. Various units may be connected to the system such as the POTS telephones **300**(A), the IP telephones **300**(IP); the guard stations GS and the companion cameras **302**, via both the gateway **400** and through the PSTN network link. A PBX connection **412** may also be utilized.

[0250] Components of SIP: SIP is a peer-to-peer protocol. The peers in a session are called User Agents (UAs). A user agent can function in one of the following roles:

[0251] User agent client (QAC)—A client application that initiates the SIP request.

[0252] User agent server (UAS)—A server application that contacts the user when a SIP request is received and that returns a response on behalf of the user.

[0253] Typically, a SIP end point is capable of functioning as both a UAC and a UAS, but functions only as one or the other per transaction. Whether the endpoint functions as a UAC or a UAS depends on the UA that initiated the request.

[0254] From an architecture standpoint, the physical components of a SIP network can be grouped into two categories: clients and servers.

[0255] In addition, the SIP servers can interact with other application services, such as Lightweight Directory Access Protocol (LDAP) servers, location servers, a database application, RADIUS server, or an extensible markup language (XML) application. These application services provide back-end services such as directory, authentication, and billing services.

[0256] SIP Clients: SIP clients include:

[0257] Phones—Can act as either a UAS or UAC. Softphones (PCs that have phone capabilities installed) and Cisco SIP IP phones can initiate SIP request and respond to requests.

[0258] Gateways—Provide call control. Gateways provide many services, the most common being a translation function between SIP conferencing endpoints and other terminal types. This function includes translation between transmission formats and between communications procedures. In addition, the gateway translates

between audio and video codecs and performs call setup and clearing on both the LAN side and the switched-circuit network side.

[0259] SIP Servers: An SIP request through a proxy server **406** is shown in FIG. **35**. If a proxy server is used, the caller UA sends and INVITE request to the proxy server, the proxy server determines the path, and then forwards the request to the callee. As shown in FIG. **36**, the callee responds to the proxy server, which in turn, forwards the response to the caller, see FIG. **37**. The proxy server forwards the acknowledgements of both parties. A session is then established between the caller and callee. Real-time transfer protocol is used for the communication between the caller and callee, as shown in FIG. **38**. If a redirect server **420** is used, see FIGS. **36**, **37**, **38**, the caller UA sends and INVITE request to the redirect sever, the redirect server contacts the location server to determine the path to the callee, and then the redirect server sends the information back to the caller. The caller then acknowledges receipt of the information, as shown in FIG. **39**. The caller then sends the request to the device indicated in the redirection information. Once the request reaches the callee, it sends back a response and the caller acknowledges the response. Real-time transfer protocol is used for the communication between the caller and the callee as shown in FIG. **40**.

[0260] The SIP gateway-to-SIP gateway record route and timing sequence is shown in FIG. **41**. Call redirection is shown in FIG. **42**. FIG. **43** shows call set-up in SDP for a voice call with or without associated video. FIG. **44** shows a typical time sequence for the audio, event and video streams associated with the system, including audio over the telephone, event detection and associated video.

[0261] SIP servers include:

[0262] Proxy server—The proxy server is an intermediate device that receives SIP requests from a client and then forwards the requests on the client's behalf. Basically, proxy servers receive SIP messages and forward them to the next SIP server in the network. Proxy servers can provide functions such as authentication, authorization, network access control, routing, reliable request retransmission, and security.

[0263] Redirect server—Provides the client with information about the next hop or hops that a message should take and then the client contacts the next hop server or UAS directly.

[0264] Registrar server—Processes requests from UACs for registration of their current location. Registrar servers are often co-located with redirect or proxy server.

[0265] How SIP Works: SIP is a simple, ASCII-based protocol that uses requests and responses to establish communication among the various components in the network and to ultimately establish a conference between two or more end points.

[0266] Users in a SIP network are identified by unique SIP addresses. A SIP address is similar to an e-mail address and is in the format of sip:userID@gateway.com. The user ID can be either a user name or an E.**164** address.

[0267] Users register with a registrar server using their assigned SIP addresses. The registrar server provides this information to the location server upon request.

[0268] When a user initiates a call, a SIP request is sent to a SIP server (either a proxy or a redirect server). The request includes the address of the caller (in the From header field) and the address of the intended callee (in the To header field). The following sections provide simple examples of successful, point-to-point calls established using a proxy and a redirect server.

[0269] Over time, a SIP end user might move between end systems. The location of the end user can be dynamically registered with the SIP server. The location server can use one or more protocols (including finger, rwhois, and LDAP) to locate the end user. Because the end user can be logged in at more than one station, it might return more than one address for the end user. If the request is coming through a SIP proxy server, the proxy server will try each of the returned addresses until locates the end user. If the request is coming through a SIP redirect server, the redirect server forwards all the address to the caller in the Contact header field of the invitation response.

[0270] Using A Proxy Server: If a proxy server is used, the caller UA sends INVITE request to the proxy server, the proxy server determines the path, and then forwards the request to the callee.

[0271] The callee responds to the proxy server, which in turn, forwards the response to the caller.

[0272] SIP Response Through A Proxy Server: The proxy server forwards the acknowledgments of both parties. A session is then established between the caller and callee. Real-time Transfer Protocol (RTP) is used for the communication between the caller and the callee.

[0273] Using a Redirect Server: If a redirect server is used, the caller UA sends an INVITE request to the redirect server, the redirect server contacts the location server to determine the path to the callee, and then the redirect server sends that information back to the caller. The caller then acknowledges receipt of the information.

[0274] The caller then sends a request to the device indicated in the redirection information (which could be the callee or another server that will forward the request). Once the request reaches the callee, it sends back a response and the caller acknowledges the response. RTP is used for the communication between the caller and the callee.

[0275] In addition to SIP, there are other protocols that facilitate voice transmission over IP. One such protocol is H.323. H.323 originated as an International Telecommunications Union (ITU) multimedia standard and is used for both packet telephony and video streaming. The H.323 standard incorporates multiple protocols, including Q.931 for signaling, H.245 for negotiation, and Registration Admission and Status (RAS) for session control. H.323 was the first standard for call control for VOIP and is supported on all Cisco Systems' voice gateways. SIP and H.323 were designed to address session control and signaling functions in a distributed call control architecture. Although SIP and H.323 can also be used to communicate to limited intelligence end points, they are especially well suited for communication with intelligent end points. Although SIP messages are not directly compatible with H.323, both protocols can coexist in the same packet telephony network if a device that supports the interoperability is available. For example, a call agent could use H.323 to communicate with gateways and use SIP for inner-call agent signaling. Then, after the bearer connection is set up, the bearer information flows between the different gateways as an RTP stream.

[0276] FIG. **45** depicts a system having a plurality of pre-programmed signals in addition to the voice stream associated with the VOIP telephone. In this configuration certain sounds such as a gunshot or cough will activate the system as

well as the voice stream **500**. In addition, preprogrammed requests in word or text form may also be included such as HELP, POLICE, FIRE, AMBULANCE, BLEEDING, EMS, DOCTOR and the like. The selected request is then routed to the appropriate response team by activating a signal to a guard station **502**, police **504**, fire department **506**, and EMS **508** and the like. The system data base is also notified as indicated at **510** and various notification priorities and responses may be activated such as e-MAIL, TELEPHONE, INTERNET and WIRELESS, and the like.

[0277] While certain embodiments and features of the subject invention have been described in detail herein it should be understood that the subject invention includes all modifications and enhancements within the scope and spirit of the subject claims.

1-53. (canceled)

54. A visual surveillance system comprising:

an emergency telephone at an emergency call location, the emergency call location being remote from a monitoring station, the emergency telephone being operable for use by an emergency user at the emergency call location to place an emergency call, the emergency telephone being in communication with an IP network;

when an emergency call is placed an emergency call signal being provided from the emergency telephone to the IP network;

a surveillance camera trained on the emergency user during use of the emergency telephone to place an emergency call, the camera being connected to the IP network, the camera when activated being operable to provide to the IP network compressed image data, the compressed image data including at least one visual image of the emergency user during the use of the emergency telephone; and

the monitoring station being connected to the IP network for receiving the compressed image data, the monitoring station being operable to display from the compressed image data at least one visual image of the emergency user.

55. The system of claim **54**, and further comprising:

a control system in communication with the IP network, the control system being operable to receive the emergency call signal, the control system being operable to provide to the monitoring station notice of the emergency call signal.

56. The system of claim **54**, and further comprising:

an access door operable by the emergency user to gain access to the emergency telephone, the control system being responsive when an emergency user opens the access door.

57. The system of claim **54**, and further comprising:

the emergency telephone being a VOIP telephone.

58. The system of claim **54**, and further comprising:

the emergency telephone being an incompatible telephone, the incompatible telephone being incompatible for communication over an IP network;

a voice over IP conversion device connected to the incompatible telephone for receiving an incompatible telephone signal, and the conversion device being operable to transmit to the IP network a sequence of IP packets conveying the telephone signal.

59. The system of claim **58**, and further comprising:

a PBX switch for switching a plurality of incompatible telephones, the IP conversion device being connected to the PBX for transmitting to the IP network a sequence of IP packets conveying an incompatible telephone signal from any of the plurality of incompatible telephone.

60. The system of claim **57**, and further comprising:

a hub for connecting the camera and the VOIP telephone to the network.

61. The system of claim **60**, and further comprising:

a power supply associated with the hub for powering the camera and the VOIP telephone.

62. The system of claim **54**, and further comprising:

a telephone associated with the monitoring station, the telephone being operable for an emergency operator to communicate with the emergency user during use of the emergency telephone.

63. The system of claim **54**, and further comprising:

the monitoring station having VOIP communications capability for personal to communicate with the emergency user.

64. A surveillance system adapted for use with an emergency telephone system. the emergency telephone system including an emergency telephone accessible by a respective emergency user at a respective emergency call location for placing a respective emergency call, the emergency location being remote from personnel receiving the emergency call from the emergency telephone on the emergency telephone system, the surveillance system comprising:

an internet protocol network;

a network interface connected to the internet protocol network, the network being connected to the emergency telephone system. the emergency telephone system via the network interface being in communication with the internet protocol network to provide to the internet protocol network the emergency call, the emergency call being provided to the internet protocol network in a format compatible with the internet protocol network;

a surveillance camera separate from the emergency telephone, the surveillance camera being operable to capture visual image data of the emergency user placing the emergency call on the emergency telephone, the surveillance camera being in communication with the internet protocol network to provide to the internet protocol network captured visual image data of the emergency user placing the emergency call on the emergency telephone;

a monitoring station in communication with the internet protocol network to receive the captured visual image data of the emergency user placing the emergency call on the emergency telephone, the monitoring station upon receiving the captured visual image data of the emergency user placing the emergency call on the emergency telephone being operable to display for viewing by personnel at the monitoring station a visual image of the emergency user placing the emergency call on the emergency telephone; and

the emergency call received from the internet protocol network being provided to personnel at the monitoring station.

65. The system of claim **64**, and further comprising:

the monitoring station displaying an icon on a map for indicating a position of the emergency telephone.

66. The system of claim **64**, and further comprising:

an apparatus for archiving a call and security system data for later retrieval purposes.

67. An emergency communication system comprising:

an emergency telephone at an emergency call location, the emergency call location being remote from a monitoring station, the emergency telephone being usable by an emergency user at the emergency call location to generate an emergency call, the emergency telephone being in communication with the internet protocol network to provide to the internet protocol network the emergency signal;

a surveillance camera at the emergency call location, the surveillance camera being operable to capture visual image data of the emergency user using the emergency telephone to generate the emergency call, the surveillance camera being in communication with the internet protocol network to provide to the internet protocol network captured visual image data of the emergency user; and

a monitoring station in communication with the internet protocol network to receive the captured visual image data of the emergency user, the monitoring station upon receiving the captured visual image data of the emergency user being operable to display for viewing by personnel a visual image of the emergency user, the emergency call being directed to the personnel at the monitoring station viewing the visual image of the emergency user.

* * * * *