Oct. 19, 1926. 1,604,017

C. A. BRIGHAM ET AL

CONE SPEAKER

Original Filed Oct. 2, 1925 2 Sheets-Sheet 1

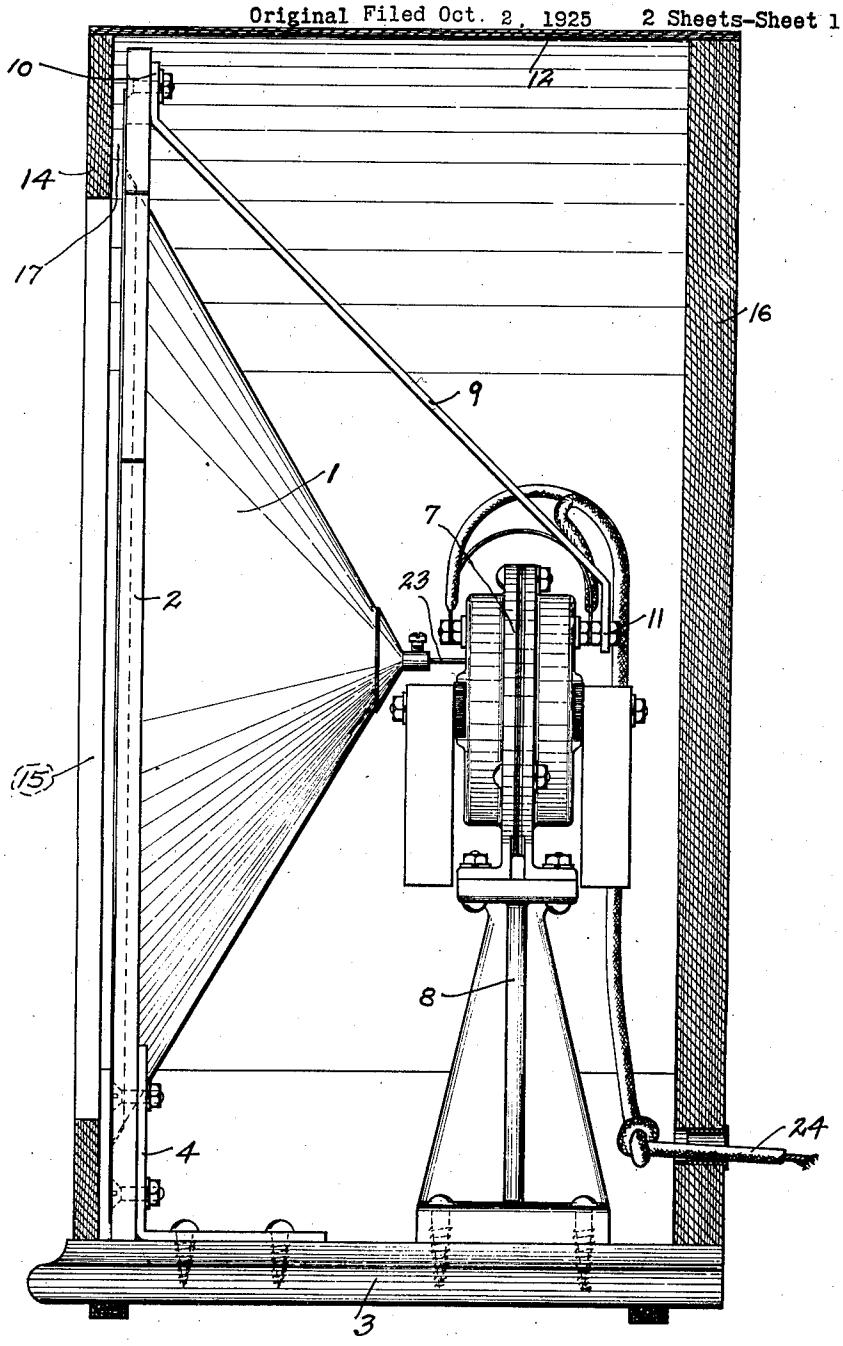

FIG. 1

INVENTOR.
DAVID H. MOSS AND CYRIL A. BRIGHAM.
BY
John B. Brady
ATTORNEY.

Oct. 19, 1926. 1,604,017

C. A. BRIGHAM ET AL

CONE SPEAKER

Original Filed Oct. 2, 1925 2 Sheets-Sheet 2

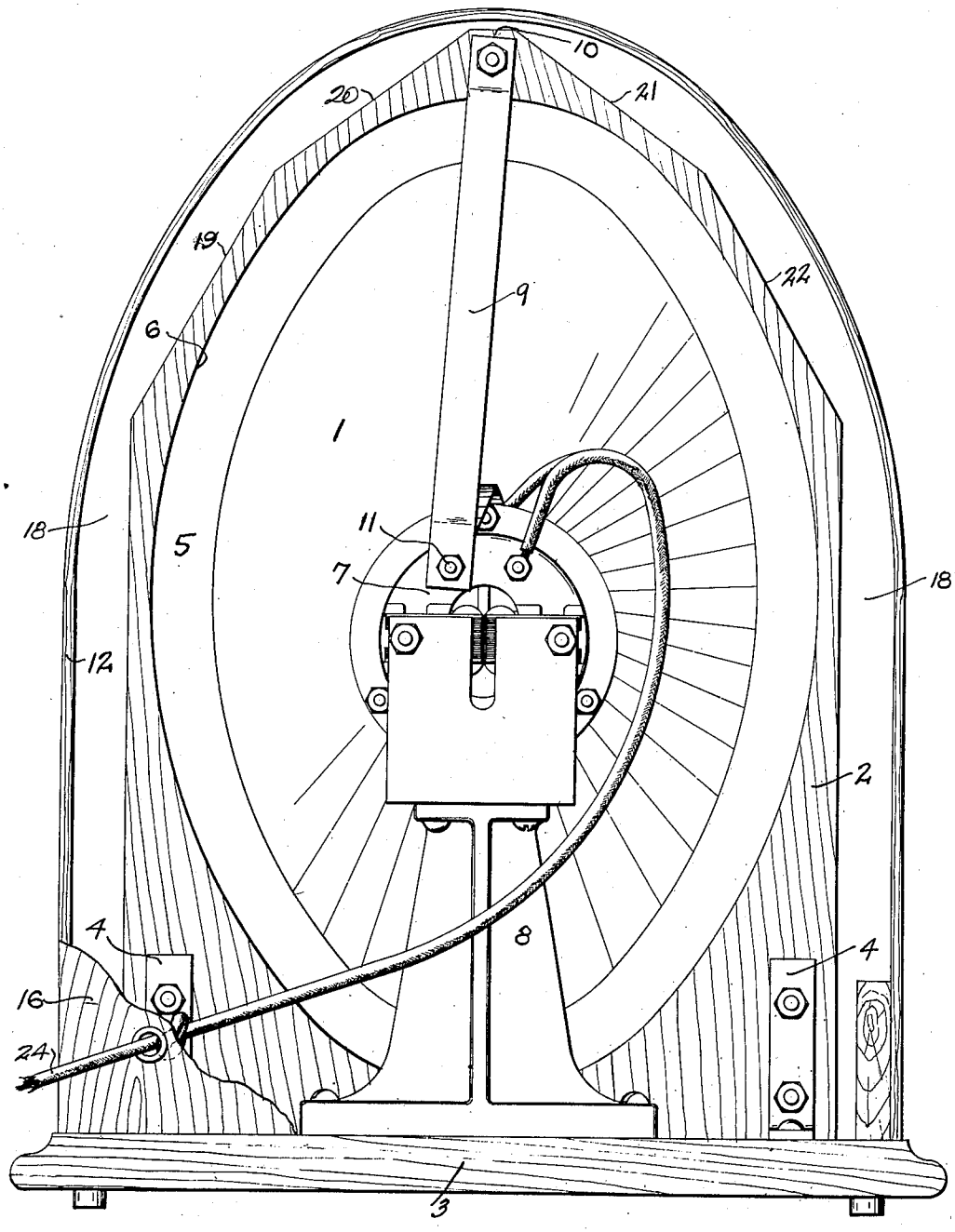

FIG. 2

INVENTORS
DAVID H. MOSS AND CYRIL A. BRIGHAM

BY

John B. Brady

ATTORNEY

Patented Oct. 19, 1926. 1,604,017

UNITED STATES PATENT OFFICE.

CYRIL A. BRIGHAM, OF EAST ORANGE, AND DAVID H. MOSS, OF NEWARK, NEW JERSEY, ASSIGNORS TO BRANDES LABORATORIES, INC., OF NEWARK, NEW JERSEY, A CORPORATION OF NEW JERSEY.

CONE SPEAKER.

Application filed October 2, 1925, Serial No. 60,128. Renewed September 17, 1926.

Our invention relates broadly to electromagnetic sound reproducers and more particularly to a cone speaker for the reproduction of radio broadcast news, concerts, music and other entertainment.

One of the objects of our invention is to provide a cone speaker for radio broadcast reproduction which is practical in construction and efficient in its reproduction of radio broadcast.

Another object of our invention is to provide a construction of cone speaker which may be readily manufactured and assembled on a quantity production basis and having its parts arranged for the maximum acoustic efficiency of the sound reproducing diaphragm.

Still another object of our invention is to provide a mounting for an electromagnetic driver and an elliptical cone shaped diaphragm within the cabinet wherein means are provided for eliminating undue damping of the diaphragm while permitting efficient operation of the cone shaped diaphragm in confined air.

Other and further objects of our invention will become apparent as the following specification progresses, by reference to the accompanying drawings, in which:—

Figure 1 is a side elevation of the parts of the cone speaker where one side of the cabinet has been broken away to show the operating parts therein; Fig. 2 is a rear view of the cone speaker with the back of the cone speaker removed to show the arrangement of the operating parts and the support for the cone diaphragm therein.

Heretofore in the art it has been proposed to employ large size cone diaphragms rigidly supported at their periphery and operated in un-confined air. We have found that such diaphragms contain a number of inherent disadvantages and as a result we have developed a cone speaker utilizing an elliptical shaped cone diaphragm which is substantially unconfined at its periphery and wherein the parts are positioned within confined air for introducing a desired degree of damping of the diaphragm, while means are provided for preventing undue damping of the diaphragm.

Referring more particularly to the drawings, the elliptical conical shaped diaphragm has been represented by reference character 1 as mounted within a vertical plate 2 which is secured to a base member 3 by means of bracket members 4. The elliptical cone shaped diaphragm 1 is flexibly connected at its periphery to a resilient elliptical shaped strip 5 which in turn is connected to plate 2, thus permitting the elliptical cone shaped diaphragm 1 to float within an elliptical aperture 6 in the vertical plate 2. An electromagnetic driver of push-pull construction has been represented as contained within a casing 7 and supported upon a vertically extending casting 8. The electromagnetic driver 7 is positively spaced from the plate 2 by means of strip 9 secured at the upper extremity 10 of the plate 2 and to a point 11 on the casing 7. The base 3, the electromagnetic driver 7 and the conical shaped diaphragm 1, are enclosed by a housing 12 having a front wall portion 14, with a suitable aperture 15 therein through which the reproduced sound may be radiated, and a rear wall portion 16. The vertical plate 2 is spaced from the front plate 14 by a distance represented at 17 and the plate 2 does not extend into abutment with the housing 12, but is provided with a positive gap 18 around the sides thereof. The top portion of the plate 2 is cut away as represented at 19, 20, 21 and 22 to provide a sufficient air space to prevent undue damping of the diaphragm 1. It will be observed that the rear wall 16 serves as a baffle plate against which the diaphragm 1 operates in confined air and it is for the purpose of relieving undue damping of the diaphragm that we provide the cut away portions 19, 20, 21 and 22. The conical shaped diaphragm is driven from the apex thereof to a link 23 which connects with the armature of the electromagnetic driver within the casing 7. The variable currents from the output of the amplification system of a radio receiver will lead through conductors 24 which connect with the electromagnetic windings of the driver.

We have found that the housing 12 serves to amplify the sound waves generated by the elliptical cone diaphragm 1. The air column between the rear wall 16 of the housing and the convex side of the conical shaped diaphragm is vibrated in accordance with the movement of the cone diaphragm 1 and the sound is directed outwardly from

the concave side of the diaphragm through the aperture 15 at greatly increased volume. We have found the elliptical cone diaphragm especially suitable for quality reproduction of broadcast entertainment.

We have determined that the arrangement of parts set forth herein is very practical and desirable in operation, and while we have described a preferred embodiment of our invention it will be understood that modifications may be made and that no limitations upon the invention are intended other than those imposed by the scope of the appended claims.

What we claim and desire to secure by Letters Patent of the United States is as follows:

1. A cone speaker comprising in combination a base member, a vertical plate secured to said base member, an elliptical aperture in said plate, a supporting member, an electromagnetic driver carried thereby, an elliptical cone diaphragm located within said elliptical aperture, a connection between said diaphragm and said electromagnetic driver for imparting sound vibrations to said diaphragm and a casing enclosing one side of said elliptical cone diaphragm and enclosing said electromagnetic driver for amplifying the sound waves generated by said elliptical cone diaphragm.

2. A cone speaker comprising in combination a base member, a vertical plate member carried by said base member adjacent one end thereof, a cone diaphragm having its floating edge terminating in the plane of said plate member, a support mounted on said base member adjacent the opposite end thereof, an electromagnetic driver mounted on said support, a connection between said driver and said cone diaphragm for imparting sound vibrations thereto and a casing mounted on said base member and enclosing said vertical plate member and said support and serving to amplify the sound waves generated by said cone diaphragm.

3. A cone speaker comprising in combination a base member, a vertical member carried by said base member, a cone diaphragm having its floating edge terminating in the plane of said member, an electromagnetic driver mounted in spaced relation to said diaphragm and arranged to vibrate said diaphragm, and a housing substantially enclosing said diaphragm and electromagnetic driver whereby said diaphragm operates in confined air for amplifying the sound waves generated by said cone diaphragm.

4. A cone speaker comprising in combination a base member, a vertical member carried by said base member adjacent one end thereof, a cone diaphragm having its floating edge terminating in the plane of said member, a support mounted on said base member adjacent the opposite end thereof, an electromagnetic driver mounted on said support, for actuating said cone diaphragm, a housing substantially enclosing said diaphragm and electromagnetic driver, said vertical member being smaller than the interior of said housing for allowing free passage of sound vibrations around said diaphragm within said housing, and reducing the damping of said diaphragm.

5. A cone speaker comprising in combination a base member, a vertical member carried by said base member adjacent one end thereof, a cone diaphragm having its floating edge terminating substantially in the plane of said vertical member, an electromagnetic driver, a vertical support carried by said base member and carrying said electromagnetic driver on the upper extremity thereof, said support having such a height that said electromagnetic driver is located on an axis through the apex of said cone diaphragm and a casing enclosing said support and having a contour at one end conforming to the shape of said cone diaphragm for amplifying the sound generated by said cone diaphragm.

6. A cone speaker comprising in combination a base member, a vertical member carried by said base member adjacent one end thereof, a cone diaphragm having its floating edge terminating in the plane of said vertical member, a support mounted on said base member adjacent the opposite end thereof, an electromagnetic driver mounted on said support and arranged to actuate said diaphragm, a housing having front, side and rear walls substantially enclosing said diaphragm and driver, said vertical member being spaced from the front wall of said housing and being smaller in size than the interior thereof whereby said diaphragm operates substantially in confined air with respect to said housing and rear wall, with the damping reduced by the free passage for sound vibrations between the interior walls of said housing and said vertical support.

7. A cone speaker comprising in combination a base member, a vertical plate carried adjacent one end of said base member, an elliptical conical shaped diaphragm having its floating edge terminating substantially in the plane of said plate, a supporting member carried adjacent the opposite end of said base member, an electromagnetic driver carried by said supporting member, means for positively spacing said electromagnetic driver from said vertical plate, said elliptical conical shaped diaphragm being directed inwardly from said vertical plate and connected with said electromagnetic driver, a sound amplifying cabinet having its lower end supported by said base member and hav-

ing its upper end elliptically shaped whereby sound vibrations may be imparted to said elliptical conical shaped diaphragm and amplified by said cabinet.

8. In an electromagnetic sound reproducer the combination of a cabinet having front, side and rear walls, a supporting member positioned within said cabinet adjacent the rear wall thereof, an electromagnetic driver carried by said supporting member, a vertical plate substantially conforming with the shape of the side walls of said cabinet but having dimensions less than the dimensions of the interior walls of said cabinet, and being spaced from the front wall of said cabinet for providing a free passage from the interior of said cabinet around said vertical plate, an elliptical conical shaped diaphragm resiliently mounted in said plate with the apex thereof directed toward the interior of said cabinet and connected with said electromagnetic driver whereby sound vibrations may be imparted to said diaphragm.

9. A sound reproducer comprising a cone diaphragm of elliptical contour, a flat plate apertured to provide an enclosure for the elliptical peripherial edge of said diaphragm, an electromagnetic driver, a connection between said driver and the apex of said diaphragm on the convex side thereof, means for supporting said driver in spaced relation to said diaphragm for imparting vibrations to the apex of said diaphragm and a sound amplifying cabinet substantially enclosing the convex side of said diaphragm and said electromagnetic driver for directing sound waves outwardly from the concave side of said diaphragm at increased amplitude.

10. A sound reproducer comprising a supporting base member, a front and rear vertical wall member extending from said base member, each of said wall members terminating in a periphery of elliptical contour, a housing extending from one side of said base member conforming with the peripheries of said front and rear wall members and terminating adjacent the other side of said base member, an electromagnetic driver supported by said base member adjacent said rear wall member, an elliptical conical diaphragm having its floating edge terminating adjacent said front wall member and a connection between said driver and said elliptical conical diaphragm for reproducing sound vibrations within said housing whereby said housing operates to amplify the effect of said reproduced sound vibrations.

11. A sound reproducer comprising an electromagnet driver including an armature with a link extending therefrom, a cone shaped diaphragm connected to said link, and a sound amplifying chamber enclosing said cone shaped diaphragm in substantially confined air and operating to modify the characteristics of the tone frequencies reproduced by said cone shaped diaphragm.

DAVID H. MOSS.
CYRIL A. BRIGHAM.