A. J. MACY.

STABILIZER.

APPLICATION FILED JULY 28, 1913.

1,203,220.

Patented Oct. 31, 1916.

5 SHEETS—SHEET 1.

Fig. 1

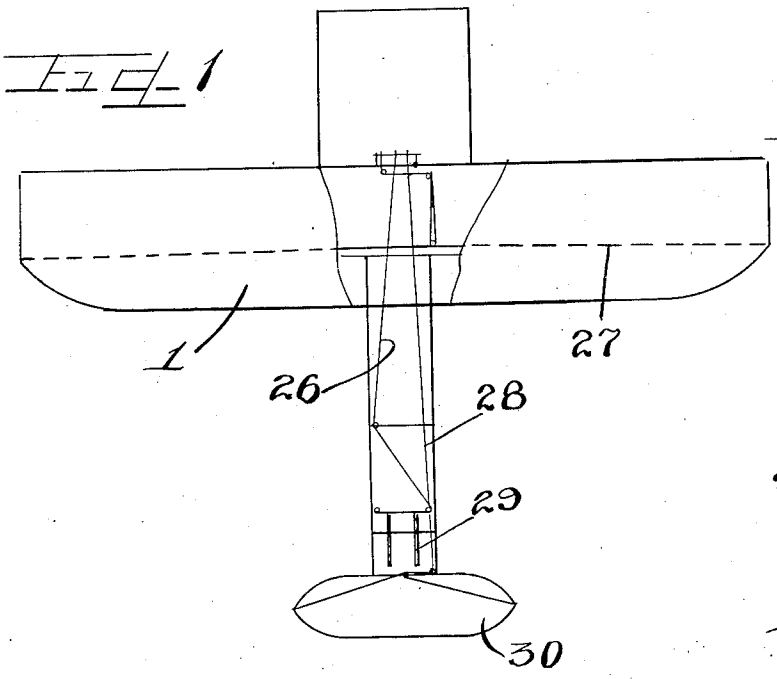

Fig. 19

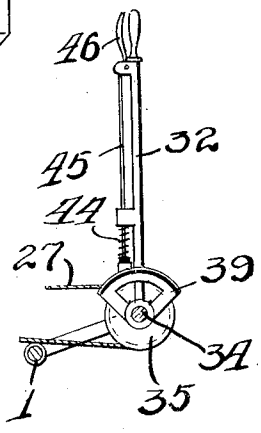

Fig. 17

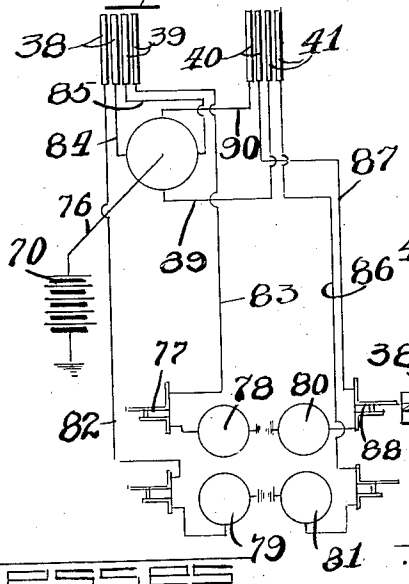

Fig. 18

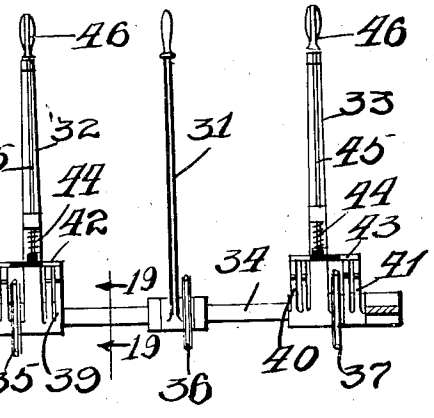

Witnesses

J. W. Angell

Charles Wills

Inventor

Alfred J. Macy

by Charles Wills Atty.

A. J. MACY.

STABILIZER.

APPLICATION FILED JULY 28, 1913.

1,203,220.

Patented Oct. 31, 1916.

5 SHEETS—SHEET 2.

Fig. 2

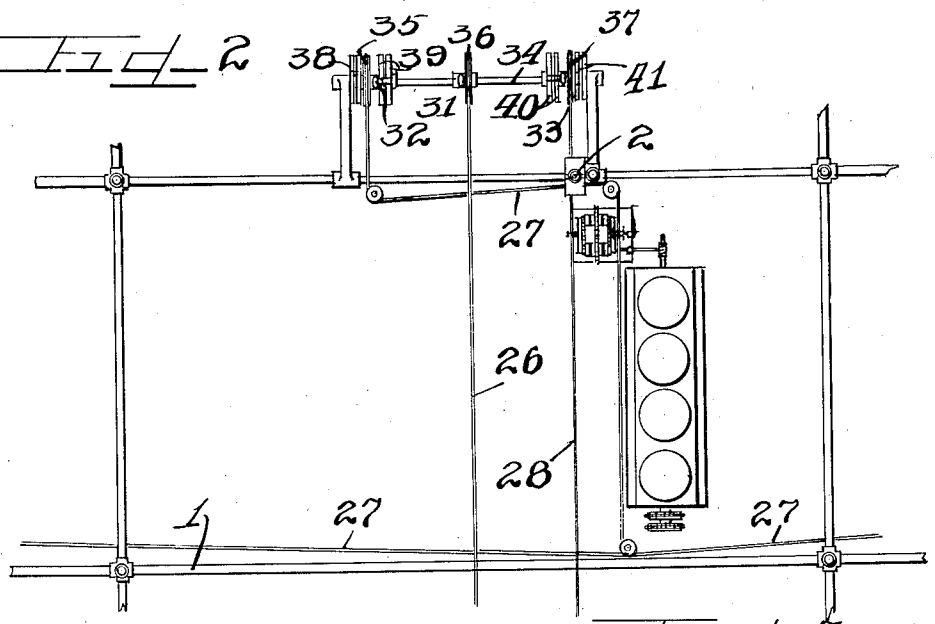

Fig. 3

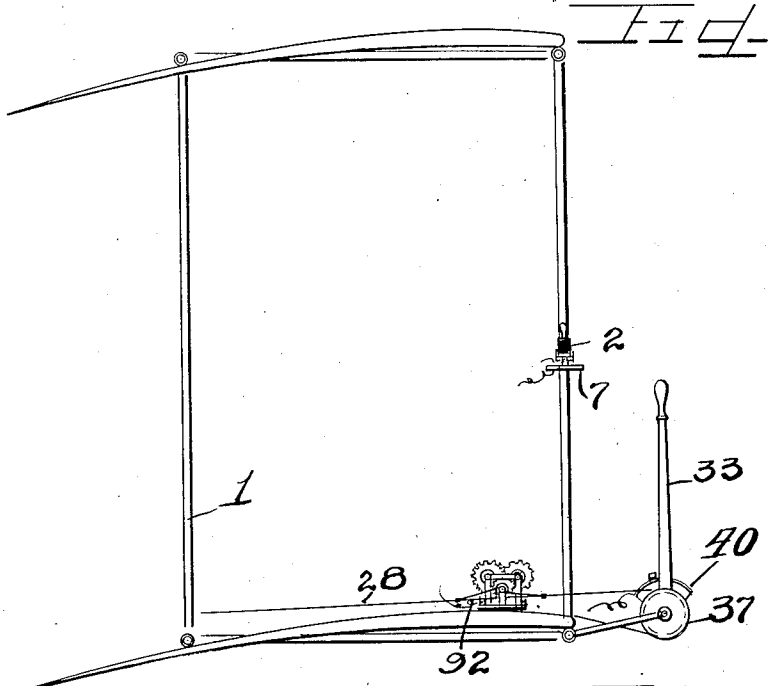

Witnesses

J. W. Angell

Charles W. Hills Jr.

Inventor

Alfred J. Macy

by Charles W. Hills Atty

A. J. MACY.

STABILIZER.

APPLICATION FILED JULY 28, 1913.

1,203,220.

Patented Oct. 31, 1916.

5 SHEETS—SHEET 3.

Fig. 4

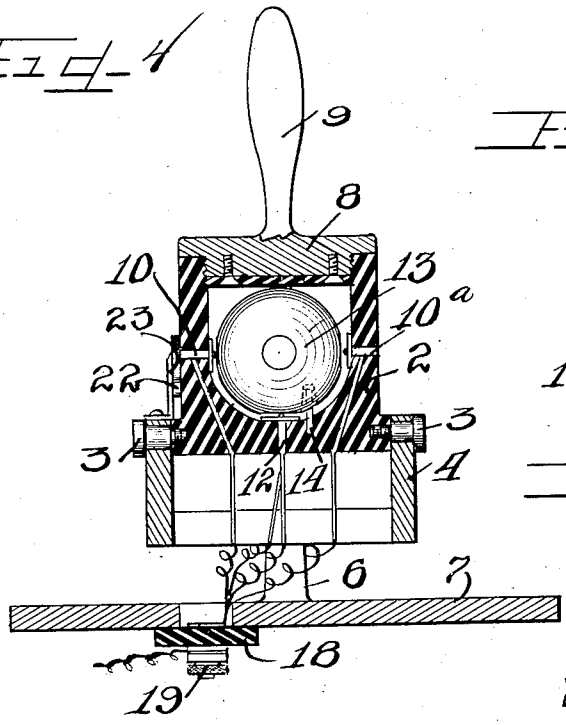

Fig. 5

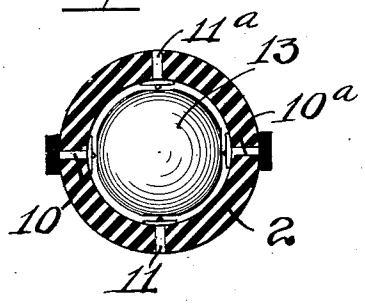

Fig. 7

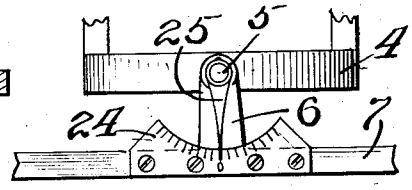

Fig. 6

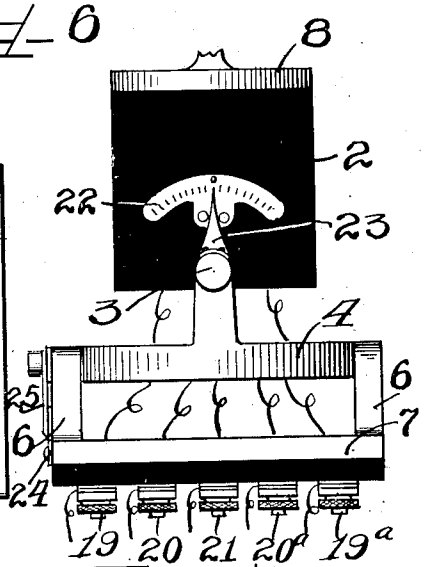

Fig. 8

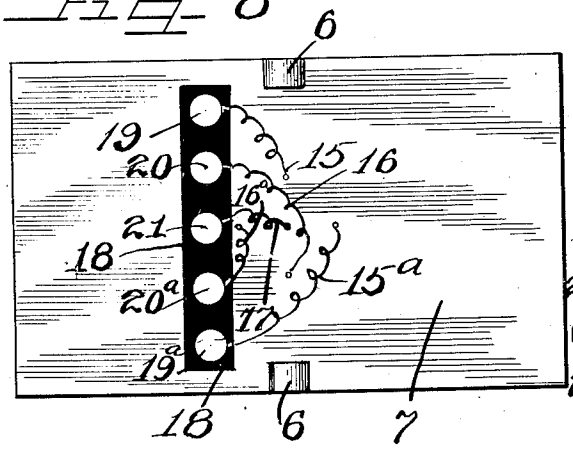

Witnesses

J. W. Angell

Charles W. Hills Jr.

Inventor

Alfred J. Macy

by Charles W. Hills

Atty.

A. J. MACY.

STABILIZER.

APPLICATION FILED JULY 28, 1913.

1,203,220.

Patented Oct. 31, 1916.

5 SHEETS—SHEET 4.

Fig. 9

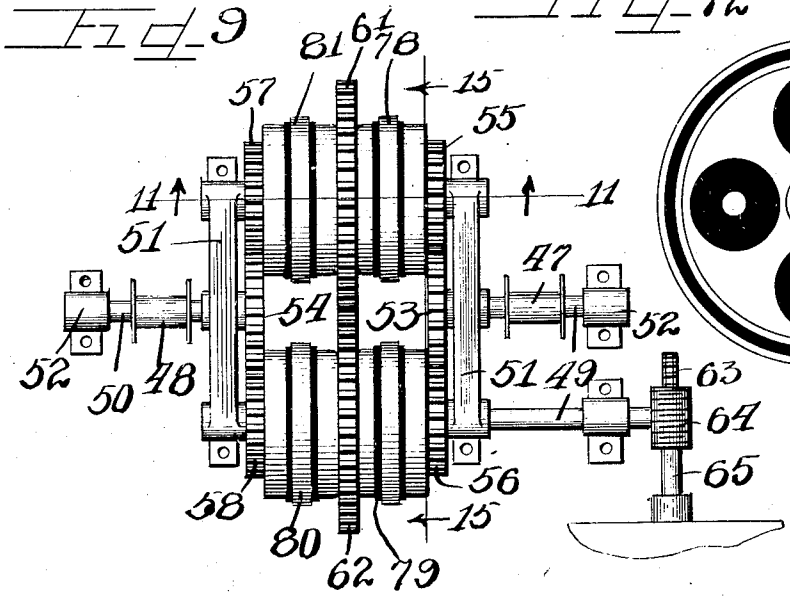

Fig. 12

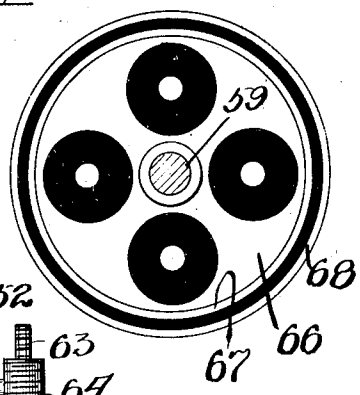

Fig. 10

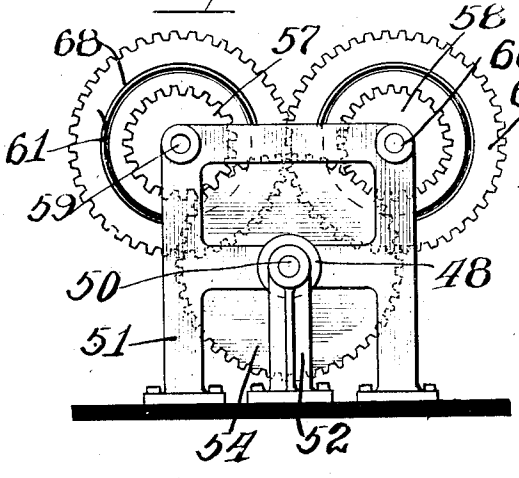

Fig. 11

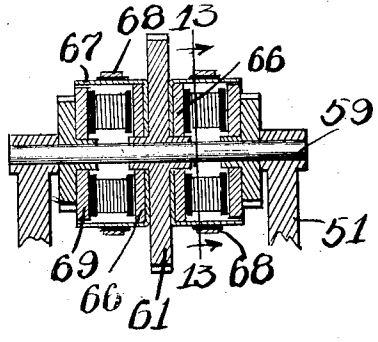

Witnesses

J. W. Angell

Chas. Wm. Hills Jr.

Inventor

Alfred J. Macy

by Charles W. Hills Atty

A. J. MACY.

STABILIZER.

APPLICATION FILED JULY 28, 1913.

1,203,220.

Patented Oct. 31, 1916.

5 SHEETS—SHEET 5.

Fig. 16

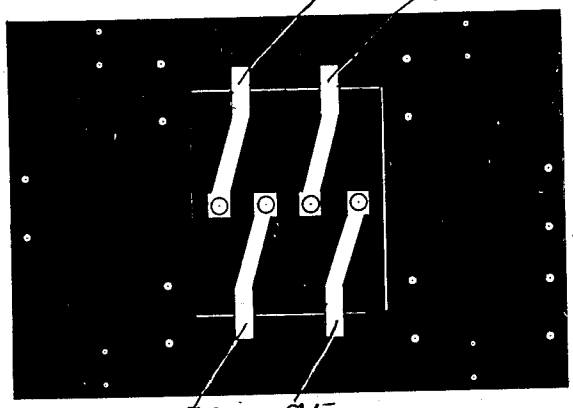

Fig. 14

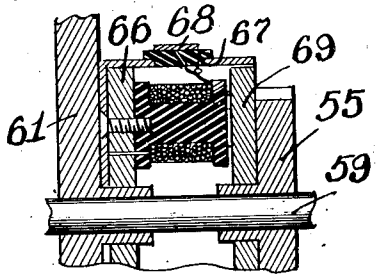

Fig. 21

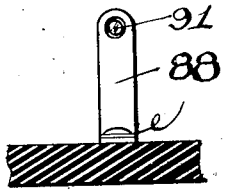

Fig. 15

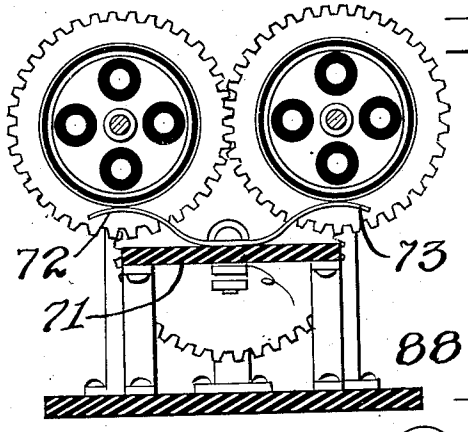

Fig. 13

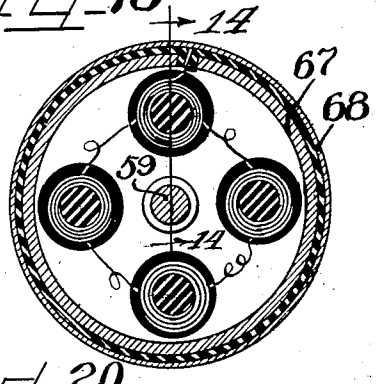

Fig. 20

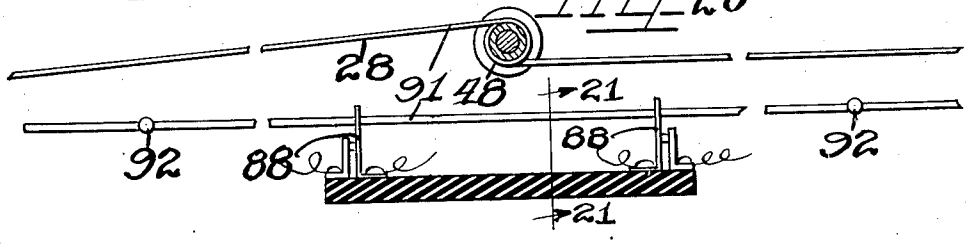

Witnesses

J. W. Angell

Charles W. Hills

Atty

Inventor

Alfred J. Macy

Charles W. Hills

Atty

UNITED STATES PATENT OFFICE.

ALFRED J. MACY, OF CHICAGO, ILLINOIS.

STABILIZER.

1,203,220. Specification of Letters Patent. Patented Oct. 31, 1916.

Application filed July 28, 1913. Serial No. 781,505.

To all whom it may concern:

Be it known that I, ALFRED J. MACY, a citizen of the United States, and a resident of the city of Chicago, in the county of Cook and State of Illinois, have invented certain new and useful Improvements in Stabilizers; and I do hereby declare that the following is a full, clear, and exact description of the same, reference being had to the accompanying drawings, and to the numbers of reference marked thereon, which form a part of this specification.

The control of heavier than air machines has presented a number of problems, owing to the fact that heretofore, all of the operations necessary to maintain the machine in proper flying position in the air have been, of necessity, performed by the operator. At times such a multitude of operations have proved confusing, and the slightest mistake in the performance thereof is immediately disastrous, and sometimes fatal.

This invention relates to a means for automatically operating the various controlling mechanisms of an aeroplane or other vehicle, wherein a very sensitive governing element is attached to the machine and acts immediately to counteract all fluctuations of the machine from normal, and acts further to correct variations in its course due to conditions beyond the control of the operator.

This invention also relates to stabilizing means associated with the controlling levers of a flying machine, such that, when said levers are manually actuated, said automatic controlling means is automatically disconnected and the machine may be readily operated independently thereof. However, with a release of said controlling levers, even momentarily, the stabilizing means is immediately and automatically thrown into operation to properly control and balance the machine in its flight.

It is an object of this invention to provide a device adapted to automatically operate governing means attached to the controlling mechanism of an aeroplane to maintain the same in a predetermined path of flight, regardless of the fluctuations tending to deviate the machine therefrom, other than those under the direct control of an operator.

It is also an object of this invention to provide a stabilizing mechanism adapted to be attached to a vehicle, said mechanism, when moved from normal, acting to set in operation positively driven means for operating the controls of the vehicle to restore the same to normal.

It is also an object of this invention to provide a container having a plurality of electrical contacts, and a freely supported and freely movable element therein adapted to close one or more of said electrical contacts when said device is moved from normal position, to set in motion means for restoring the same to normal.

It is also an object of this invention to provide a container suitably mounted to permit adjustment thereof at a predetermined angle, and means within the same for closing electrical contacts to set in operation mechanism for restoring the same to normal position.

It is also an object of this invention to provide a stabilizing element adapted to be adjusted through various angles to maintain a machine to which it is attached in a predetermined path, and with means associated with said stabilizing element to properly indicate the adjustment thereof to an operator.

It is also an object of this invention to provide a container having a freely supported ball therein adapted to close one or more electrical contacts in said container when the same is tilted from normal, either laterally or longitudinally or both, whereby magnetically operated mechanism is set in operation to restore the vehicle to which said container is attached to a predetermined position.

It is also an object of this invention to provide a stabilizing element adapted to close one or a plurality of electrical contacts to set controlling mechanisms in operation, said stabilizing means so connected to the controlling levers of a vehicle as to automatically disconnect said stabilizing means from said controlling levers when said levers are manually actuated, and to be automatically thrown into operation when said levers are released.

It is furthermore an object of this invention to provide a freely movable non-rotatable ball adapted to close various electrical contacts to set controlling mechanisms for a vehicle in operation.

It is finally an object of this invention to

provide a simple device consisting of few parts and easy of assembly, and of extremely sensitive nature, acting immediately to correct all fluctuations of a vehicle, to which it is attached, from normal.

The invention (in a preferred form) is hereinafter more fully described and defined in the accompanying drawings and specification.

In the drawings: Figure 1 is a diagrammatic top plan view, partly broken away, and with parts omitted, of a Wright type of aeroplane illustrating the usual controlling cables thereon. Fig. 2 is an enlarged, fragmentary top plan view showing the power plant and controlling levers, and with the automatic, positively driven, power operated actuating mechanism for said controlling means shown associated therewith. Fig. 3 is a diagrammatic side elevation with parts omitted, showing the position of the stabilizing mechanism with respect to the controlling levers of the device. Fig. 4 is a central section taken through the adjustable stabilizing element, and showing the ball therein in elevation. Fig. 5 is a central horizontal section taken through said stabilizing element, with the ball in elevation. Fig. 6 is a fragmentary exterior view of the stabilizing element, showing the indicating means mounted concentrically about the longitudinal horizontal axis thereof. Fig. 7 is a fragmentary elevation of a portion of the mounting for said stabilizing element, illustrating the indicating means for denoting the inclination of said elements about the transverse horizontal axis thereof. Fig. 8 is a top plan view of the base upon which said stabilizing element is mounted, and illustrating the flexible electrical connections projecting therefrom. Fig. 9 is a top plan view of the magnetically clutch driven drums, which serve to operate the controlling cables of the machine. Fig. 10 is an end elevation thereof. Fig. 11 is a section taken on line 11—11 of Fig. 9. Fig. 12 is an end elevation of one of the clutch members showing the electro-magnets mounted thereon. Fig. 13 is a section taken on line 13—13 of Fig. 11. Fig. 14 is a fragmentary section taken on line 14—14 of Fig. 13. Fig. 15 is a section taken on line 15—15 of Fig. 9. Fig. 16 is a top plan view of the insulating base for said magnetic clutch members, showing the contact brushes mounted thereon. Fig. 17 is a diagrammatic view illustrating the scheme of electrical connections. Fig. 18 is a rear elevation of the controlling levers of the aeroplane. Fig. 19 is a section taken on line 19—19 of Fig. 18. Fig. 20 is a section taken through the insulating base of the magnetic clutch mechanism with parts omitted, to illustrate the auxiliary cable connected to one of the main controlling cables of the aeroplane for automatically switching the electric current from the magnetic clutches when the main cable has been adjusted to extreme position. Fig. 21 is a section on line 21—21 of Fig. 20.

As shown in the drawings: The reference numeral 1, indicates as a whole a Wright type of biplane, although this particular type of aeroplane has only been used to illustrate the adaptation of my invention thereto.

The reference numeral 2, indicates a stabilizing bowl constructed of insulating material and having supporting studs 3, threaded therein, and journaled in a bracket 4, which is also journaled on gudgeons 5, at right angles to said studs 3, in upstanding brackets 6, formed on a supporting plate 7. A cover 8, insulated on its inner face and provided with an actuating handle 9, is threaded into the upper open end of said bowl 2. A pair of longitudinal electrical contacts 10, and 10^a, respectively, extend inwardly through the walls of said bowl, and at right angles thereto, and disposed substantially in the same plane therewith, are lateral oppositely disposed electrical contacts 11, and 11^a, respectively. A central contact 12, extends upwardly through the bottom of said bowl, and resting continually thereupon is a metallic ball 13, which as shown is flattened on its periphery at points corresponding with the position of said electrical contacts such that electrical communication may be effected between said central contact 12, and either one or both of said contacts 10, and 11, or either of the other of said pairs of electrical contacts. For the purpose of permitting oscillation of said ball, and yet preventing rotation thereof within said bowl, said ball is provided with a recess, in which loosely engages a fixed pin 14, which is secured in the bottom of said bowl and at one side of said central contact 12. Thus the ball, although free to oscillate and move within said bowl, within certain limits, is always positioned, due to said pin projecting thereinto, with the flattened surfaces on the periphery thereof in proper relation to the respective contacts within the bowl. Wires 15, 15^a, 16, 16^a, and 17, are connected to the respective contact members 10, 10^a, 11, and 11^a, and 12, respectively, and are then led downwardly through a recess in said base 7, to a terminal block 18, and are there respectively connected to the terminals 19, 19^a, 20, 20^a, and 21, respectively. Secured on the outer surface of said stabilizing bowl, and concentric with one of said stud pintles 3, is a graduated scale 22, and rigidly secured in upright position on said bracket 4, is a pointer 23, which, as said bowl is inclined about said horizontal axis 3, will designate the amount of inclination thereof. Likewise an indi-

cating scale 24, is rigidly secured on said base 7, concentric with one of said studs 5, and a pointer 25, is secured on and is adapted to move with said stud pin 5, to traverse said scale 24, and designate the inclination of said bowl about said respective horizontal axis.

As shown in Figs. 1, 2, and 3, controlling cables 26, 27, and 28, are connected respectively on the machine, the one 26, to the vertical guiding rudders of the machine for the purpose of diverting the same laterally through the air; the cable 27, is connected to the warping surfaces or ailerons at the tips of the main planes, and the cable 28, is connected to the rear elevating surface 30, of the aeroplane. Mechanism is provided for manually actuating said cables to control the aeroplane, and this comprises the levers 31, 32, and 33, which are respectively connected to said cables 26, 27, and 28, and are pivotally mounted upon a transverse shaft 34, mounted conveniently to the operator, as shown in the drawings slightly in advance of the main frame of the aeroplane, substantially in line with the lower struts thereof. A sheave 35, is rigidly connected upon said lever 32, to move therewith at all times, said cord or cable 27, being wound thereabout. Levers 31, and 33, are likewise provided with sheaves 36, and 37, respectively, the cable 26, being wound about said sheave 36, and the cable 28, being wound about said sheave 37, as already described with reference to the lever 32. Thus it is apparent that the outer levers 32, and 33, control respectively the lateral and longitudinal inclining mechanisms of the aeroplane, whereas said lever 31, serves to guide said aeroplane laterally in its flight through the air. Two pairs of arc shaped insulated contact members 38, and 39, respectively are secured upon said shaft 34, adjacent said lever 32, and likewise two pair of similar contact members 40, and 41, respectively, are secured on said shaft 34, adjacent said lever 33. A contact bridge member 42, is slidably mounted upon said lever 32, and a similar contact bridge member 43, is likewise mounted upon said lever 33, and in each case said bridge members are impelled downwardly normally into contact with the respective arc shaped contact members by spiral springs 44. A pull rod 45, is connected to said bridge members and extends upwardly along each of the respective levers 32, and 33, and may be actuated by a grip 46, to raise said bridge members against the pressure of said spiral springs, and disconnect said contact members from one another. Of course, said bridge member is divided into two parts, each of which is insulated from one another, the one portion adapted to engage one pair of said contact members, and the other to engage the other of said contact members, as, for instance, members 38, and 39, respectively.

The power driven means for actuating the controlling cables 27, and 28, of the aeroplane, consist of the drums 47, and 48, respectively, which are suitably keyed on shafts 49, and 50, journaled in a frame 51, and supported at their outer ends by bearings 52. Secured upon the inner end of each of said drum shafts are gears 53, and 54, respectively, each of which meshes with a pair of gears at all times, the pair meshing with the gear 53, being denoted by the reference numerals 55, and 56, and those meshing with the gear 54, being denoted by the reference numerals 57, and 58, respectively. Thus each of said drum shafts 49, and 50, may be independently driven from either one of the respective pairs of gears meshing therewith. For the purpose of driving each one of said pairs of gears independently of one another, a plurality of magnetic clutches are provided, one pair being mounted upon a shaft 59, which also supports said gears 55, and 57, slidably and rotatably thereon, and the other pair of said magnetic clutches, mounted upon a shaft 60, which also freely supports said gears 56, and 58, respectively. Rigidly secured upon each of said shafts 59, and 60, and intermeshing with one another are centrally disposed gears 61, and 62, said shaft 60, being extended at one end and provided with a worm wheel 63, driven by a worm 64, secured upon the crank shaft 65, of the motor of the aeroplane, said shaft 60, thereby serving through the intermediation of said gears 61, and 62, to also drive said shaft 59, at all times. The magnetic clutch elements comprise a disk 66, one of which is rigidly secured to each side of said central gears 61, and 62, and secured between said disks and said gears is a cup member 67, which projects outwardly from said disk, and has mounted and insulated therefrom on the outer periphery thereof, a contact ring 68. A number of electro-magnets are rigidly mounted upon each of said disks 66, and project outwardly therefrom surrounded by said cup member, and magnetic disks 69, adapted to be attracted and held immovably by said electro-magnets, are rigidly secured to each of said gears 55, and 56, 57, and 58, respectively to move therewith at all times. Thus it is apparent that when said electro-magnets are energized said magnetic disks 69, mounted on the respective gears and slidable therewith will be drawn inwardly upon the shaft and the attraction of the magnets of the clutch will constrain said respective driving gears to move therewith, thus driving either one or both of the gears 53, 54, in one direction or the other, as the case may be. Any suitable source of E. M. F. such as storage battery 70, may be used

for energizing the electromagnets of said clutches.

Of course, in preserving the equilibrium of the aeroplane it is desirable that the respective magnetic clutches operating the various controlling cables of said aeroplane be actuated at the proper time to counteract any effect which would serve to deviate the aeroplane from its course. For this purpose the respective terminals, 19, 19ª, 20, 20ª, and 21, respectively on said terminal block 18, are connected to the source of E. M. F. and with said contact members 38, 39, 40, and 41, respectively and thence with said magnetic clutches already described. One terminal of each of said magnetic clutch members is grounded, as is likewise one terminal of the source of E. M. F. In each of said respective clutch members the electromagnets are connected in multiple and one end of the windings thereof being grounded, the other is led to the contact ring on the outer periphery of the clutch members.

Mounted on the support for said frame 51, is a base 71, which has insulatably secured thereon the respective contact brushes 72, 73, 74, and 75, which bear respectively upon the contact rings 68, on each one of said clutch members. The electrical connections are shown more clearly in Fig. 17, in which a conductor 76, leads from the source of E. M. F. 70, to the terminal 21, and thence to the central contact 12, within said stabilizing bowl. Each of said clutches is connected by means of a suitable wire with one of a pair of said arc shaped contact members mounted adjacent the controlling levers of the aeroplane, and in each case a normally closed spring switch 77, is interposed in the line of each of said conductors.

The clutches for the lateral controls are designated by the reference numerals 78, and 79, whereas the clutches for the longitudinal controls are designated by the reference numerals 80, and 81, respectively. The wires from said clutches 78, and 79, lead respectively to one each of the respective pairs of arc shaped contact members 38, and 39, and, connected to each of the other of the contact members of said pairs, are conductors 84, and 85, which lead to the respective terminals 19, and 19ª, in said terminal block 18, and thence to the contact members 10, and 10ª, respectively in said stabilizing bowl. In a similar manner conductors 86, and 87, lead from said clutch members 80, and 81, through spring switches 88, and are connected at their ends to one each of the pairs of arc shaped contact members 40, and 41, respectively. Likewise, conductors 89, and 90, respectively connected to said terminal block and to the contact members 11, and 11ª, lead to one each of the pairs of arc shaped contact members 40, and 41, thus permitting an electrical circuit to be established between the respective conductors 86, and 87, and 89, and 90, by means of said bridge contact member 43. Said bridge contact member 42, acts in a similar manner to effect electrical communication between said conductors 82, and 84, and 83, and 85. The purpose of the respective bridge members 42 and 43, is to permit the electric circuits to be completely broken from either the transverse or longitudinal controlling mechanism of the aeroplane independently of each other when said levers 32, or 33, are manually actuated, so that the stabilizing device will have no tendency to counteract manipulations of the controlling mechanism effected by an operator.

For the purpose of disconnecting the clutches when the adjusting mechanism of the aeroplane has been moved into an extreme position, an auxiliary cable 91, is connected at its ends to said cable 28, on each side of the drum 48, and is trained through apertures in the spring switch members 88, adapting the cable to slide therethrough. Stops 92, are secured to said auxiliary cable 91, at points between said spring switches 88, and the end connections of said auxiliary cable and said cable 28, so that when the adjusting mechanism, in this case the elevator 30, has been moved into an extreme position, one of said stops 92, will have been drawn inwardly against said spring switch to thereby open the same and break the electric circuit, thereby disconnecting the clutch mechanism operating the elevator surface of the aeroplane. A similar construction is used in connection with said controlling cable 27, the auxiliary cord in this case being trained through the apertured spring switches 77.

The operation is as follows: If the operator desires to fly in a straight horizontal path, the stabilizing bowl is set with the respective indicators 23, and 25, at a central position denoted as zero. Should for any reason the machine be diverted slightly from its course, either tilted upwardly or downwardly longitudinally, or laterally by a sudden gust of wind or other conditions, the stabilizing bowl 2, being moved from its level position, the ball therein will close one of the contacts and the proper magnetic clutch member being energized thereby, either one of the drums 47, or 48, as the case may be, will be rotated, thus actuating the controlling surfaces of the aeroplane, until the aeroplane has been restored to normal, and of course at such a time the stabilizing bowl again being in level position the electrical contacts will be broken and the respective drums for the time being will cease to rotate. The forward and aft contacts in said bowl are denoted respectively by the reference numerals 10, and 10ª, and likewise rotation about the longitudinal axis affect-

ing the lateral stability thereof, is governed by the contact 11, if in one direction and by the contact 11^a, if in the other direction.

The stabilizing mechanism also serves to properly bank the machine when the operator makes a turn, and this in particular is a feature wherein the device acts with mathematical accuracy serving to insure a banking of the machine at the proper angle, which is sometimes often miscalculated by an operator when manually controlling the machine.

Assuming the machine to be flying in a straight horizontal path and perfectly level, the operator using only the lateral guiding lever 31, (which controls the vertical rudders of the machine) throws the same in position for a quick turn to the left. This creates a centrifugal force, which, acting upon the ball 13, in the stabilizing bowl, serves to move the same against the right lateral contact 11^a, which serves to close the electric circuit to cause proper rotation of the drum 47, whereupon the lateral control cables 27, being actuated thereby, will cause an upward tilting of the right wing of the aeroplane, and a corresponding downward tilting of the left wing, thus causing the machine to bank at the proper angle. The contacts, of course, will remain closed until the machine has reached the proper banking angle, whereupon the forces of gravity and centrifugal force, both acting upon the ball 13, within said bowl, will produce a resultant force acting at normal and through the central contact and the ball, so that although the stabilizing bowl is in an inclined position, the ball will be disposed centrally therein and out of contact with all of the contact members in the side of said bowl. However, when the turn has been made and the machine straightened out upon its course, the centrifugal force will vanish and that of gravity acting upon the ball will serve to draw the same downwardly into contact with said contact member 11, which, operating the proper clutch member, will cause an upward tilting of the left wing of the aeroplane and a consequent lowering of the right wing thereof until the machine is in level position once more. Thus it is seen that the operator, by merely using the guiding lever 31, may traverse a zigzag course through the air, and the stabilizing mechanism will serve to bank the machine at the proper angle even though the curves or turns made by the machine be alternately first in one direction and then in another. Should for any reason the machine while traveling through the air strike a downwardly flowing current of air, thus causing a depression of the head of the machine the forward contact 10, will be closed, thus setting in operation the proper mechanism to elevate the surface 30, and thereby incline the machine upwardly again to normal. However, if the operator desires to make a spiral ascent or descent the stabilizing bowl is first set at a proper angle with the longitudinal axis (by partial rotation around the lateral axis) for the angle of ascent or descent desired. The lateral rudder is used as usual and centrifugal movement of the ball closes the proper contact to effect the necessary warp or like action, whereupon the ball breaks contact and remains at normal until the lateral rudder is again shifted to vary the centrifugal action. Of course, with a properly constructed device the bowl may if preferred, be adjusted to such position about its respective longitudinal and transverse axis as to insure the machine making a right or a left hand turn at a proper bank and maintaining the same independently of the vertical rudder.

Should an emergency arise, or occasion demand, when the machine is flying under the control of the stabilizing mechanism the operator may seize the manually operatable levers 32 and 33, and by such act raising the bridge contact members 42, and 43, respectively, thereby break the electrical circuit, and permit manual operation of the machine without any counteracting effect by the stabilizing mechanism.

A positive or negative acceleration of the machine will not cause a serious depression or elevation thereof for the following reason: Assuming the machine to be suddenly checked in its flight relative the earth by meeting with a head wind, the ball, due to its momentum will be thrown forward, thus closing the forward contact in the bowl and tending to elevate the machine. However, the impact is only momentary and the energy being immediately dissipated the ball falls back into a neutral position, the lag or inertia of the clutches preventing immediate response to the momentary closing of the contacts and hence precluding accident to the machine through a misapplication of the controls by the stabilizing mechanisms.

There are numerous ways in which the ball within the stabilizing element may be caused to close a contact other than through a tilting of the machine, such as by vibrations, a sudden drift to leeward caused by a gust of wind, or any shock or concussion transmitted to the bowl from the machine from any source whatsoever, as for instance striking an object in midair. As already pointed out, however, the inertia of the ball causing the same to close a contact when a sudden shock is applied, only causes a momentary closure of the contacts, the energy of the ball, due to its momentum, being immediately dissipated, thus permitting the ball to again assume a neutral position in the bowl. In particular, as a machine flies through the air, the constant vibrating thereof will cause the

ball to continually close one or more of the electrical contacts, but the duration of closure is so short as to be insufficient for the proper energizing of the magnetic clutches to cause immediate response thereto.

I am aware that various details of construction may be varied through a wide range without departing from the principles of this invention. I therefore do not purpose limiting the patent granted otherwise than necessitated by the prior art.

I claim as my invention:

1. A stabilizing device for vehicles comprising a container, a central electrical contact and a plurality of longitudinal and transverse electrical contact members therein, a ball oscillatably non-rotatably mounted within said container resting on said central contact and having flattened portions on its surface and adapted to connect said electrical contacts, guiding means for said vehicle, and operative connections set in operation by the closure of said electrical contacts to drive said guiding means.

2. In combination with a vehicle, a stabilizing element comprising a container, a plurality of transverse and longitudinal electrical contacts therein, a central contact therein, a non-rotatable oscillatable ball resting on said central contact and adapted to connect the same with said transverse and longitudinal contacts, guiding mechanisms for the vehicle, and operative connections set in operation by said stabilizing element to actuate said guiding mechanisms of the vehicle.

3. In a device of the class described the combination with an aeroplane, of a stabilizing device mounted thereon, transverse and longitudinal pivotal supports supporting said stabilizing device, a plurality of transverse and longitudinal electrical contacts therein, a ball oscillatably but non-rotatably supported therein adapted to close said electrical contacts, and mechanism connected to said stabilizing device, and to the controlling means of said aeroplane to properly operate the latter when the aeroplane is diverted from a predetermined path of flight.

4. In a device of the class described for vehicles, a stabilizing element, electrical contacts therein, a freely movable element within said stabilizing device adapted to close said electrical contacts, magnetic clutches adapted to be set in operation by the closure of said contacts, drums connected thereto adapted to be driven by said clutches, controlling cables of a vehicle wound about said drums adapted to be actuated thereby, and an auxiliary cable connected to said controlling cables and adapted to cause breaking of the electrical connection when the extreme movement of said controlling means has been reached.

5. In a device of the class described a container, a plurality of electrical contacts therein, an oscillatable non-rotatable ball mounted in said container having a plurality of flattened surfaces adapted to close against said electrical contacts, an adjustable mounting for said stabilizing device adapting the same, to be adjusted through any angle, and indicating means mounted on said device to indicate the adjustment thereof.

6. The combination with an aeroplane, of means for banking the same during turns thereof, comprising a container movable about a longitudinal and transverse axis, a plurality of transverse and longitudinal electrical contacts therein, a central contact therein, and a solid movable non-rotatable element resting on said central contact and adapted to close said transverse contacts when the machine is turned laterally from its course, mechanism for banking said aeroplane, and means set in operation by the closure of said contacts to operate said banking mechanism until the machine is inclined at a proper angle for said turn.

7. In a device of the class described a base, a ring journaled thereon, a scale secured on said base, a pointer therefor secured on said ring, an insulating container journaled in said ring, a scale on said container, a pointer therefor on said ring, a movable element in said container, electrical contacts therein adapted to be closed by said movable element, and mechanism adapted to be set in operation by the closure of said contacts.

8. In a device of the class described an insulating container, transverse and longitudinal axes supporting the same, indicating scales for each of said axes to denote the amount of movement of said container thereabout, a plurality of electrical contacts, a movable element in said container adapted to close said contacts, a pin secured in the container and projecting into said element to prevent rotation thereof, and mechanism adapted to be set in operation by the closure of said contacts.

9. In a device of the class described magnetic clutch mechanism, means energizing the same, a container, a plurality of electrical contacts therein, an oscillatable non-rotatable ball contact element mounted in said container having flattened surfaces one for each of said contacts within the container adapted to close the contacts to close the energizing circuit of said means, and said clutch mechanism constructed to be inert for momentary closures of said circuit by said contact element.

10. In a device of the class described electro-magnetic mechanisms, a container, a plurality of electrical contacts therein for said mechanisms, and a gravity acting os-

cillatable non-rotatable element having flattened surfaces one for each of said contacts and normally resting on one of said contacts adapted to close against the others to close the energizing circuit for said mechanisms.

In testimony whereof I have hereunto subscribed my name in the presence of two subscribing witnesses.

ALFRED J. MACY.

Witnesses:
CHARLES W. HILLS, Jr.,
EDWARD HUSBAND.