US00D979509S

(12) United States Design Patent

Ogishita et al.

(10) Patent No.: US D979,509 S
(45) Date of Patent: ** Feb. 28, 2023

(54) **CONNECTOR**

(71) Applicant: **SONY INTERACTIVE ENTERTAINMENT INC.**, Tokyo (JP)

(72) Inventors: **Naoki Ogishita**, San Mateo, CA (US); **So Morimoto**, Tokyo (JP)

(73) Assignee: **SONY INTERACTIVE ENTERTAINMENT INC.**, Tokyo (JP)

(**) Term: **15 Years**

(21) Appl. No.: **29/736,338**

(22) Filed: **May 29, 2020**

(51) **LOC (14) Cl.** **13-03**

(52) **U.S. Cl.**
USPC **D13/133**; D13/147

(58) **Field of Classification Search**
USPC D8/105; D10/78, 85; D13/108, 117, D13/133, 137.4, 139.4, 139.7, 146–147, D13/153–154, 160, 162; D14/240, 433, D14/435.1, 480.1; D27/194
CPC H01R 13/6461; H01R 13/6582; H01R 13/6658; H01R 13/7195; H01R 24/62
See application file for complete search history.

(56) **References Cited**

U.S. PATENT DOCUMENTS

D223,924 S		6/1972	Adelson	
D516,034 S		2/2006	Huang	
D527,709 S	*	9/2006	Kuo	D13/147
D553,567 S	*	10/2007	Kawanobe	D13/133
D554,065 S	*	10/2007	Ho	D13/147
D589,453 S		3/2009	Zhao et al.	
D589,455 S	*	3/2009	Wu	D14/435.1

(Continued)

FOREIGN PATENT DOCUMENTS

TW D141352 S 7/2011

OTHER PUBLICATIONS

SnapLab, Date: May 6, 2008, [online], [site visited Jun. 24, 2022]. Available from internet, URL: https://www.bhphotovideo.com/c/product/525486-REG/Sony_DPPA_BT1_Bluetooth_USB_Adapter_for.html/reviews (Year: 2008).*

(Continued)

Primary Examiner — Shawn T Gingrich
Assistant Examiner — Bryan N. Melvin
(74) *Attorney, Agent, or Firm* — Nixon & Vanderhye

(57) **CLAIM**

The ornamental design for a connector, as shown and described.

DESCRIPTION

FIG. **1** is a perspective view of front, top and left side of a first embodiment of a connector showing our new design;
FIG. **2** is a front view of the first embodiment thereof;
FIG. **3** is a rear view of the first embodiment thereof;
FIG. **4** is a left side view of the first embodiment thereof;
FIG. **5** is a right side view of the first embodiment thereof;
FIG. **6** is a top view of the first embodiment thereof;
FIG. **7** is a bottom view of the first embodiment thereof;
FIG. **8** is a perspective view of front, top and left side of a second embodiment thereof;
FIG. **9** is a front view of the second embodiment thereof;
FIG. **10** is a rear view of the second embodiment thereof;
FIG. **11** is a left side view of the second embodiment thereof;
FIG. **12** is a right side view of the second embodiment thereof;
FIG. **13** is a top view of the second embodiment thereof; and,
FIG. **14** is a bottom view of the second embodiment thereof.
The broken lines in the drawings illustrate features for a connector that form no part of the claimed design.

1 Claim, 8 Drawing Sheets

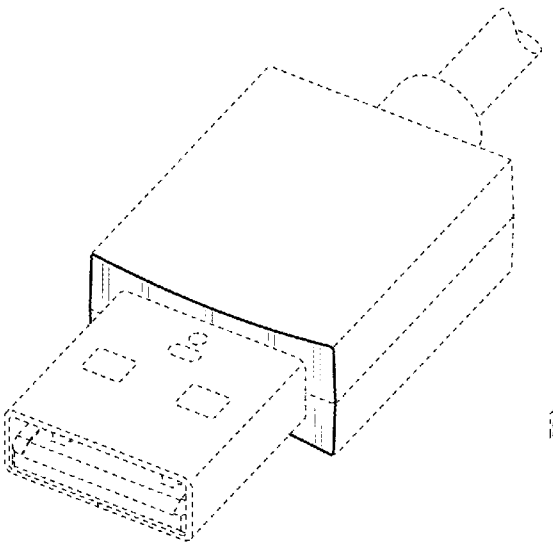

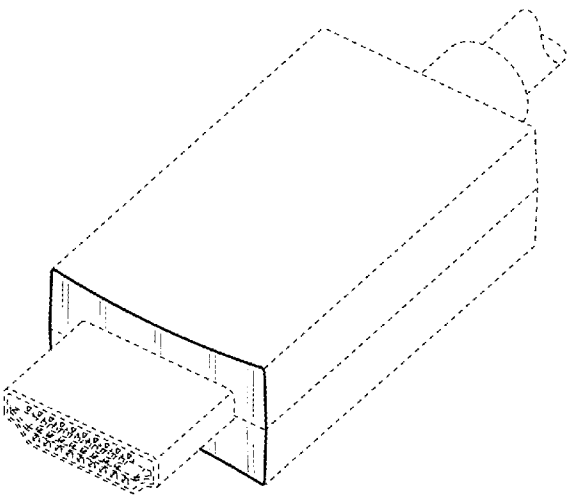

(56) **References Cited**

U.S. PATENT DOCUMENTS

D602,441	S		10/2009	Wu et al.	
D603,800	S		11/2009	Zhao et al.	
D620,449	S	*	7/2010	Lee	D13/154
D622,221	S		8/2010	Lin	
D626,085	S	*	10/2010	Lin	D13/147
D635,931	S	*	4/2011	Amidon	D13/154
D637,158	S		5/2011	Hu	
D672,315	S	*	12/2012	Naito	D13/147
D675,572	S	*	2/2013	Arai	D13/147
D692,390	S		10/2013	Smith et al.	
D714,226	S		9/2014	Chang et al.	
D714,732	S		10/2014	Masumoto et al.	
D824,909	S		8/2018	Namala	
D846,548	S	*	4/2019	Wilson	D14/433
2004/0185719	A1		9/2004	Wang	
2009/0275235	A1	*	11/2009	Shi	H01R 13/6461 439/607.58
2013/0090020	A1	*	4/2013	Zhang	H01R 24/62 439/660
2014/0220825	A1		8/2014	Chang	
2014/0322956	A1	*	10/2014	Naito	H01R 13/6582 439/370

OTHER PUBLICATIONS

Allied, Date: Jan. 28, 2021, [online], [site visited Jun. 24, 2022]. Available from internet, URL: https://alliedboltinc.com/Poleline-Hardware/Concave-Locknut~117/3-8-inch-CONCAVE-SQUARE-LOCKNUT-22016 (Year: 2021).*

Sony, Date: Aug. 4, 2003, [online], [site visited Jun. 24, 2022]. Available from internet, URL: https://www.amazon.com/Sony-MSAC-US30-Memory-Reader-Writer/dp/B0000C4DX5 (Year: 2003).*

PressStart, Date: Oct. 21, 2020, [online], [site visited Jul. 15, 2022]. Available from internet, URL: https://press-start.com.au/news/playstation/2020/09/19/these-new-ps5-photos-give-massive-ps3-vibes-and-show-just-how-big-it-really-is/ (Year: 2020).*

Office Action of the Intellectual Property Office issued in TW Patent Application No. 109306385, dated Sep. 30, 2021, English translation provided.

Office Action of the Intellectual Property Office issued in TW Patent Application No. 109306386, dated Sep. 30, 2021, English translation provided.

Office Action issued in U.S. Appl. No. 29/864,924 dated Nov. 16, 2022.

40MM, Date: Mar. 3, 2015, [online], [site visited Nov. 2, 2022], Available from internet, URL: https://www.knife-xpress.com/k82294z2.html (Year: 2015).

* cited by examiner

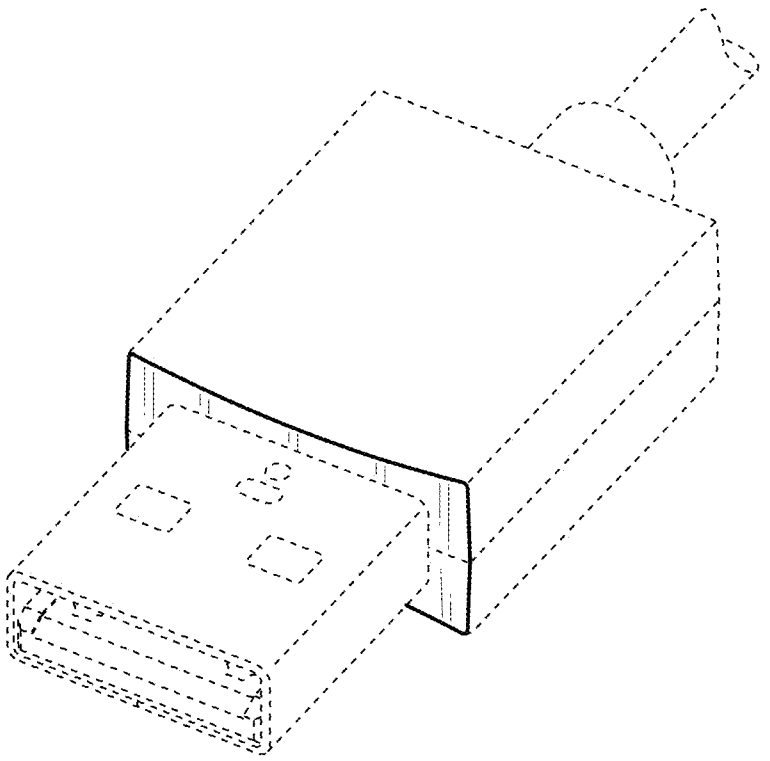

FIG. 1



FIG. 2



FIG. 3

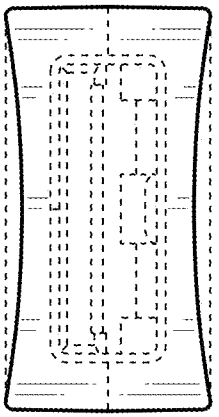

FIG. 4

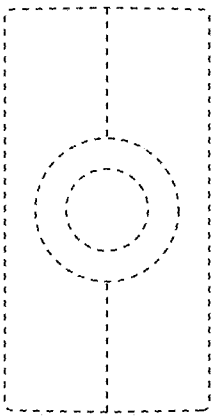

FIG. 5



FIG. 6



FIG. 7

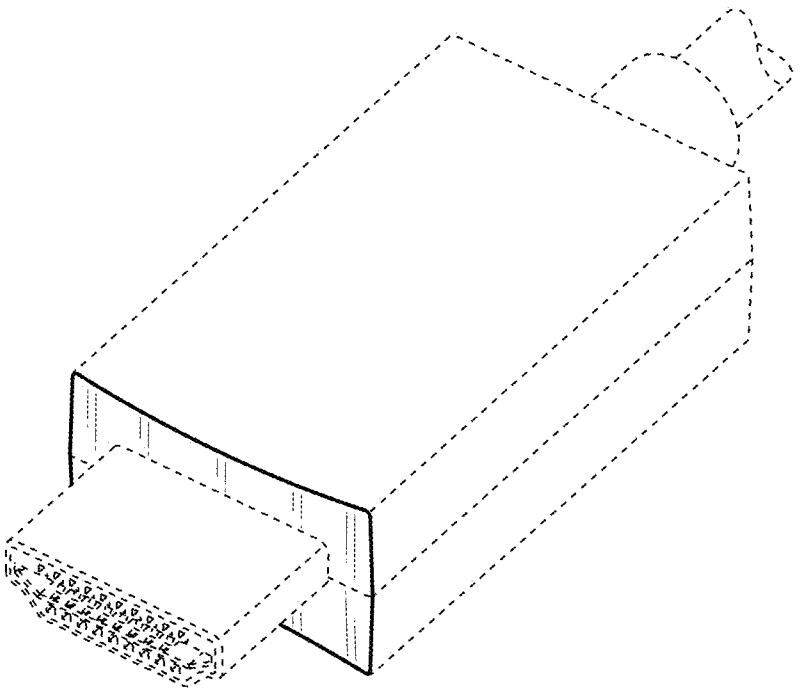

FIG. 8



FIG. 9



FIG. 10

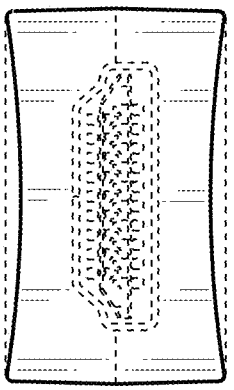

FIG. 11

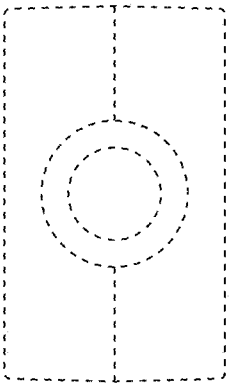

FIG. 12

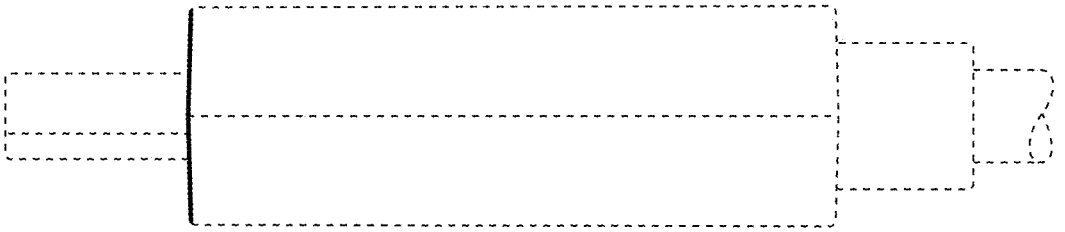

FIG. 13



FIG. 14