(12) PATENT
(19) AUSTRALIAN PATENT OFFICE

(11) Application No. AU 199883056 B2
(10) Patent No. 733953

(54) Title

Blade carrier for use in a communication plug

(51)[6] International Patent Classification(s)
H01R 023/02 H01R 013/658
H01R 013/58

(21) Application No: 199883056 (22) Application Date: 1998.09.01

(30) Priority Data

(31) Number	(32) Date	(33) Country
08/923382	1997.09.03	US

(43) Publication Date : 1999.03.18
(43) Publication Journal Date : 1999.03.18
(44) Accepted Journal Date : 2001.05.31

(71) Applicant(s)

Avaya Technology Corp.

(72) Inventor(s)

Chen-Cheih Lin; George W. Reichard Jr.; Ted E. Steele

(74) Agent/Attorney

SPRUSON and FERGUSON,GPO Box 3898,SYDNEY NSW 2001

(56) Related Art

US 5496196
US 5697815
US 4040699

ABSTRACT

BLADE CARRIER FOR USE IN A COMMUNICTION PLUG

A blade carrier assembly for use in a communication plug (12) terminating a cord carrying a plurality of conductors. The assembly includes a dielectric carrier (84) having a plurality of grooves (86) disposed on both its upper and lower surfaces for receiving a plurality of electrically conductive blades (76). One end of the blades is configured to interface with a conductor from a cord, which is an insulation displacement connector (IDC) in the preferred embodiment. The other end of the blades is configured as a jack interface end (78) for electrical communication with a jack spring (82). In a preferred embodiments, the grooves in the dielectric carrier position the conductor interface ends of the blades in a substantially circular array to conform with the general configuration of conductors in a round cable.

S & F Ref: 430462

AUSTRALIA

PATENTS ACT 1990

COMPLETE SPECIFICATION

FOR A STANDARD PATENT

ORIGINAL

AUSTRALIAN PATENT OFFICE SEC 113

Name and Address of Applicant: ~~Lucent Technologies Inc~~ ~~600 Mountain Avenue~~ ~~Murray Hill New Jersey 07974-0636~~ ~~UNITED STATES OF AMERICA~~ Avaya Technology Corp. 211 Mount Airy Road Basking Ridge New Jersey 07920 USA

Actual Inventor(s): Chen-Cheih Lin, George W. Reichard, Jr., and Ted E. Steele

Address for Service: Spruson & Ferguson, Patent Attorneys
Level 33 St Martins Tower, 31 Market Street
Sydney, New South Wales, 2000, Australia

Invention Title: Blade Carrier for Use in a Communication Plug

The following statement is a full description of this invention, including the best method of performing it known to me/us:-

BLADE CARRIER FOR USE IN A COMMUNICATION PLUG

Field of the Invention

The present invention relates generally to the field of modular communication plugs for terminating cables or conductors.

Description of Related Art

In the telecommunications industry, modular plug type connectors are commonly used to connect customer premise equipment (CPE), such as telephones or computers, to a jack in another piece of CPE, such as a modem, or in a wall terminal block. These modular plugs terminate essentially two types of cable or cordage: ribbon type cables and standard round or sheathed cables.

In ribbon type cables, the conductors running therethrough are arranged substantially in a plane and run, substantially parallel, alongside each other throughout the length of the cable. The individual conductors may have their own insulation or may be isolated from one another by channels defined in the jacket of the ribbon cable itself, with the ribbon cable providing the necessary insulation. Conversely, the conductors packaged in a standard round cable may take on a random or intended arrangement with conductors being twisted or wrapped around one another and changing relative positions throughout the cable length.

Traditional modular plugs are well suited for terminating ribbon type cables. Typically, these plugs are of a dielectric, such as plastic, structure in which a set of terminals are mounted side by side in a set of troughs or channels in the plug body such that the terminals match the configuration of the conductors in the cable connected thereto. When the plug is inserted into a jack, the terminals will electrically engage jack springs inside the jack to complete the connection.

A common problem found in these modular plugs is for the conductors to pull away or be pulled away from the terminals inside the plug structure. This can be caused by persons accidentally pulling on the cable, improperly removing the plug from a jack or merely from frequent use. To alleviate the stress on the connections between the conductors and the plug terminals, prior inventors have

included an anchoring member in the housing of the dielectric structure. In these designs, the dielectric structure, i.e., the plug, contains a chamber for receiving the cable. The cable is then secured within the chamber via pressure exerted upon the cable jacket by the anchoring member in conjunction with one or more of the chamber walls. U.S. Patent Nos. 5,186,649 and 4,002,392 to Fortner, *et al.* and Hardesty contain examples of such strain relief apparatus.

While these modular plugs have been effective in providing strain relief to ribbon type cables, standard round cables or cords pose additional strain relief problems. For example, to terminate a round cable carrying four conductor pairs with an existing modular plug requires the following steps: First, the cable or cord jacket must be stripped to access the enclosed conductors. Next, because the conductors in a conductor pair are generally twisted around one another, the twist must be removed and the conductors oriented to align with the required interface. Aligning the conductors usually involves splitting the conductors in at least one of the pairs and routing these over or under conductors from other pairs while orienting all the conductors in a side-by-side plane. Once the conductors are aligned in a plane, they may be joined to the terminals in the plug. However, the orientation process can result in various conductors of different pairs crossing over each other, thereby inducing crosstalk among the several conductor pairs.

This process of terminating a round cable introduces significant variability in connecting the conductors to the plug terminals and places additional strain on the connections between the conductors and the plug terminals. Because the individual conductors in a conductor pair are often twisted around one another and the conductor pairs themselves are often twisted around one another, the conductor configuration a technician sees when the cable is cut changes based on the longitudinal position of the cut in the cable. Thus, for each assembly, the technician must determine the orientation of the cable first and then follow the steps discussed above to translate that orientation into a side-by-side, generally planar pattern to match the configuration of the terminals in the plug. Moreover, the necessity of splitting the conductors in at least one of the pairs, which is an industry standard, presents another potential for error in making the connections to the plug terminals. In addition, orienting the conductor positions from an

essentially circular arrangement into a planar arrangement places additional stress on the conductor-terminal connections.

U. S. Patent No. 5,496,196 to Winfried Schachtebeck discloses a cable connector in which the connector terminals are arranged in a circular pattern to match more closely the arrangement of conductors held in a round cable. However, the Schachtebeck invention attempts to isolate each individual conductor and apparently requires all conductor pairs to be split before termination to the connector.

Another problem that has plagued modular plug terminated cables of any type is crosstalk between the communication channels represented by the conductor pairs. The jack springs, conductors, and the plug terminals near the jack springs are generally quite close to, and exposed to, one another providing an opportunity for electrical signals from one channel, i.e. conductor pair, to become coupled to another channel, i.e., crosstalk. Crosstalk becomes particularly acute when the conductors are carrying high frequency signals, and interferes with signal quality and overall noise performance. Furthermore, it is often difficult to ensure proper conductive contact between the jack springs and the conductors, which can also be a source of noise.

In addition, the economic aspects of the prior art necessity for the installer to separate out the twisted pairs of conductors and route them to their proper terminals in the plug are of considerable moment. Even if the installer, splicer, or other operator is accurate in the disposition of the conductors, the time consumed by him or her in achieving such accuracy is considerable. Thus, in a single work day, the time spent in properly routing the conductors can add up to a large amount of time, hence money. Where it is appreciated that thousands of such connections are made daily, involving at least hundreds of installers, it can also be appreciated that any reduction in time spent in mounting the plug can be of considerable economic importance.

Accordingly, there exists a need for a high frequency, modular plug that can terminate a standard round cable and that provides a straightforward interface between the conductors in the cable and the plug terminals, involving considerably

less assembly time than heretofore, while simultaneously providing strain relief to the cable. In addition, it is desirable that such a plug be capable of optimizing crosstalk through selective tuning. In this context, optimization means reducing crosstalk in the plug or providing a predetermined level of crosstalk to match the requirements of a jack designed to eliminate an expected crosstalk level.

Summary of the Invention

The present invention is for use in a high frequency communication plug that includes several features aimed at overcoming at least some of the deficiencies in the prior art discussed in the foregoing and, to a large extent, meets the aforementioned desiderata. In a preferred embodiment thereof, these deficiencies are overcome in a communication plug comprised of two housing components: a jack interface housing component and a strain relief housing component. The jack interface housing is designed to complement the jack type in which the plug will be inserted and has a plurality of slots for receiving the jack springs disposed in its upper surface. The strain relief housing component receives the cable carrying conductors to be terminated and is attached to the jack interface housing.

The present invention is a blade carrier confined within the two housing components when the plug is assembled. Specifically, the blade carrier has a plurality of grooves or channels disposed on both its upper and lower surfaces for receiving a plurality of electrically conductive blades. One end of each of the blades is configured to interface with a conductor from a cable. In a preferred embodiment, the conductor interface end of each of the blades is configured as an insulation displacement connector (IDC). The other end of each of the blades is configured as a jack interface end for electrical communication with a jack spring and is bifurcated to form a locating slot.

According to one aspect of the instant invention, the grooves in the blade carrier position the conductor interface ends of the blades in a substantially circular or radial array. Advantageously, the circular arrangement closely conforms to the general configuration of the conductors in a round cable thereby reducing or eliminating the need to map conductors into a linear, side-by-side arrangement, as is typical in the prior art.

For terminating cables carrying conductors arranged in pairs, the grooves in the blade carrier pair-wise position the conductor interface ends of the blades in a circular or radial array to correspond with the conductor pairs in a round cable. Rather than requiring a split of any conductor pair at the conductor interface end of the blades, the blade carrier in conjunction with the blades perform the mapping from the circular array, at the conductor interface end, to a linear, side-by-side arrangement at the jack interface end of the blades. In the prior art, the process of splitting a conductor pair across other conductors by a technician has been apt to cause electrical interference (i.e., crosstalk) between the conductors. Moreover, assembly technicians often incorrectly position conductors when they split conductor pairs thereby causing obvious signal or channel failures. With the circular to linear mapping discussed above, the instant invention provides both economic savings and increases the reliability of the communication plug, while, at the same time, minimizing the installer's contribution. It is only necessary for the installer to separate the pairs from each other, and the two conductors of each pair, and place them in the proper locating grooves of the proximal end of the strain relief housing, thereby creating a patterned radial array of conductors with which the arrayed IDC blade ends mate when the strain relief housing and the carrier are pressed together. The channels in the carrier route the blades to the linear array at the jack interface end thereof, in which array certain of the individual conductive pairs are split in accordance with the standard convention. Thus, in a linear array of eight terminals as defined by the blade ends, terminals 1 and 2, which represent pair II, are adjacent each other as are terminals 4 and 5 (pair I) and 7 and 8 (pair IV), but terminals 3 and 6 (pair III) are separated from each other by terminals 4 and 5. This splitting of pair III occurs in the carrier by means of the unique channel configurations for the routing of the blades. Thus, the installer is not called upon to split the pairs, inasmuch as such splitting is accomplished in the carrier.

Additional advantages will become apparent from a consideration of the following description and drawings:

Brief Description of the Drawings

Figure 1 is a perspective view of the high frequency communication plug according to the present invention;

Figure 2 is an exploded view of the high frequency communication plug according to the present invention illustrating the jack interface housing, the strain relief housing, the blade carrier and the tunable blades;

Figure 3 is a perspective view of the jack interface housing;

Figure 4 is a perspective view of the strain relief housing;

Figure 5a is a front elevation view of the strain relief housing showing the channels for receiving the individual conductors and the blades;

Figure 5b is a side elevation view of one side of the strain relief housing showing the position of the anchor bar;

Figure 5c is a rear elevation view of the strain relief housing showing the end where the cable or cord enters the housing;

Figure 5d is a plan view of the strain relief housing showing the top of the housing;

Figure 5e is a detailed cross-sectional view of the anchor bar in engagement with a cable or cord;

Figure 6 is a perspective view of the tunable blades as they are oriented when in the jack interface housing;

Figure 7a is a plan view of the tunable blades;

Figure 7b is a side elevation view of the tunable blades showing the electrically significant regions along with the blades' relationship to the locating bar;

Figure 7c is a front elevation view showing the conductor connecting interface ends of the blades;

Figure 8 is a perspective view of the blade carrier for routing and holding the blades;

Figure 9 is a perspective view showing the relationship between the tunable blades and the blade carrier;

Figure 10 is a perspective view from the rear of the tunable blades positioned in the blade carrier;

Figure 11 is a perspective view of the tunable blades positioned in the blade carrier;

Figure 12 is a cross-sectional elevation view of the jack spring housing; and

Figure 13 is a front elevation view of the jack spring housing of the invention.

Detailed Description

A preferred embodiment of a high frequency communication plug according to the present invention is shown in Figure 1. High frequency communication plug 12 includes two major housing components: jack interface housing 15 and strain relief housing 30, both preferably made from a suitable plastic material. Jack interface housing 15 comprises a substantially hollow shell having side walls and upper and lower walls and contains a plurality of slots 17 in one end for receiving jack springs contained in a wall terminal block or other device containing a jack interface (see Figure 3). The number of slots 17 and dimensions of jack interface housing 15 is dependent on the number of conductors to be terminated and/or connected and the shape of the jack in the terminal block. For most applications, the general shape of jack interface housing 15 remains consistent with the number of slots and the overall width thereof varies in relation to the number of conductors. To secure communication plug 12 in a jack, jack interface housing 15 includes a resilient latch 19 and latch arm 21 extending from its lower surface.

Because latch 19 is secured to jack interface housing 15 at only one end, leverage may be applied to arm 21 to raise or lower locking edges 23. When jack interface housing 15 is inserted into a jack, pressure can be applied to arm 21 for easy entry, which, when released, allows arm 21 and locking edges 23 to return to the locking position. Once jack interface housing 15 is seated within the jack, arm 21 can be released causing locking edges 23 to be held behind a plate forming the front of the jack, which is generally standard on such jacks, thereby securing the connection. Similarly, jack interface housing 15 can be released via leverage on arm 21 to free locking edges 23 from behind the jack plate so that jack interface housing 15 can be removed.

The second major housing component is strain relief housing 30, preferably of suitable plastic material. Strain relief housing 30 has a rectangular opening 36, which provides entry for a cable or cord carrying conductors to be terminated. The top surface of strain relief housing 30 includes opening 40, which is involved in providing the strain relief functionality, as will be explained more fully hereinafter. Two side apertures 25 are used for securing strain relief housing 30 to jack interface housing 15. A second pair of side apertures 26 are used for securing carrier 84 (see Figure 2) to jack interface housing 15. Both of these connections will be discussed hereinafter. For ease in removing communication plug 12 from a jack, trigger 32 extends from the lower surface of strain relief housing 30 to overlap arm 21 when the two housing components 15 and 30 are joined together, as can be seen in Figure 1. This overlap allows arm 21 to be operated via pressure on trigger 32, which in turn depresses arm 21 to the unlock position, which is more convenient for the user because of its location towards the cable end of communication plug 12. In addition to convenience, trigger 32 provides an important anti-snag feature for arm 21. It is not uncommon for many computer or communication devices to be used together. However, this can often result in a maze of cables and electrical cords. Unfortunately, arm 21 has a tendency to trap other cables or cords between itself and the plug body resulting in damage to arm 21 or breaking arm 21 off the plug altogether. However, with the overlap of arm 21, trigger 32 deters other cables or cords from lodging between either arm 21 or trigger 32 and the plug body, thereby effectively preventing potentially damaging snags.

Referring now to Figure 2, the internal components of communication plug 12 are shown. Captured between the two housing components 15 and 30 is carrier 84, which is channeled or grooved to carry a plurality of tunable blades 70. To secure carrier 84 to jack interface housing 15, carrier 84 includes a pair of catch members 87, shown best in Figure 8 (only one catch member shown), that are configured for reception in apertures 26 in jack interface housing 15. Tunable blades 70 have both an insulation displacement connection (IDC) end 72, for electrical communication with conductors from the cable, and a jack interface end 78, for electrical communication with jack springs in the jack. Tunable blades 70 are positioned in grooves 86 of blade carrier 84 such that IDC ends 72 are positioned towards strain relief housing 30 and jack interface ends 78 are positioned towards jack interface housing 15 for alignment in slots 17 of the housing 15. Figure 3 illustrates the orientation of the blades 70 when carrier 84 is inserted in housing 15.

The communication plug described herein is the subject of copending application, Serial Number 08/922,920 (docket number Ensz 6-5-15-3), by Ensz *et al.*, submitted concurrently with the instant application.

Strain Relief Housing

Strain relief housing 30 will now be described with reference primarily to Figures 4 and 5. Housing 30 is adapted to receive a cable carrying conductors to be terminated through rectangular opening 36 (see Figure 1) and through passage 34 to cable circular passage 38 (see Figure 5c). Circular passage 38 is designed to receive round cable carrying conductors arranged in a substantially circular fashion. However, by means of rectangular opening 36, a ribbon type cable can be terminated by stripping the outer jacket thereof and passing only the enclosed conductors through circular passage 38.

Surrounding circular passage 38 and extending from the face end of the housing are a plurality of projections or prongs comprising segregation prongs 46 and conductor separating prongs 48. Shown best in Figure 5a, these prongs define a plurality of conductor control channels 50 for receiving the insulated conductors from the cable. In the embodiment shown, the layout of the prongs is designed to

terminate an eight conductor cable consisting of four conductor pairs. Each conductor pair naturally dresses towards a separate corner with conductor separating prongs 48 separating one conductor from another in the same pair and segregation prongs 46 separating the conductor pairs from one another. Segregation prongs 46 are preferably larger than conductor separating prongs 48 to minimize the potential for crosstalk interference between the conductor pairs. In addition to defining conductor control channels 50, the prongs, which are bifurcated, also define IDC control channels 52 for receiving the IDC ends 72 of tunable blades 70 (see Figures 7 and 9) that make an electrical connection with the cable conductors. Tunable blades 70 and their IDC ends 72 are discussed in more detail hereinafter.

As can be seen in Figure 5a, positioning conductor pairs towards separate corners results in a substantially radial or circular arrangement. This circular design is especially advantageous for terminating round cables as the conductors are already arranged in a generally circular fashion. As discussed hereinbefore, one problem an assembler faces in terminating a round cable is mapping conductor pairs from their positions in the cable to a linear arrangement for connecting to a modular plug. The circular design of the instant invention allows a technician merely to rotate the cable until the conductors align with the desired conductor control channels 50 without having the conductors cross-over one another. Furthermore, the circular design reduces variability in terminating a cable by defining the location of the individual conductors in space via control channels 50. Each pair of wires serves a different signal channel, and are readily identifiable as by color coding so that they may be properly placed in the radial array to connect to the corresponding blades (see, for example, Figure 7a and 7c).

Another advantage of strain relief housing 30 is that none of the conductor pairs needs to be split, i.e., each connector of the pair routed to a different location, when terminating to control channels 50. As will be made clear hereinafter, tunable blades 70 and carrier 84 accomplish the translation from a circular arrangement of conductors to a linear, side-by-side arrangement of jack spring contacts. Eliminating the requirement on the part of the installer to split one of the conductor pairs and thereby create cross-overs provides for still higher reliable

connections by eliminating that mapping step. Inasmuch as strain relief housing 30 provides a conductor interface that requires minimal disturbance to the radial arrangement of the conductors from the circular cable and segregation prongs 46 are used to isolate conductor pairs from each other to the greatest extent possible, crosstalk between the conductors is held to a minimum thereby maximizing the signal to noise ratios for the conductor pairs.

Strain relief housing 30 provides strain relief for a terminated cable via an anchor bar 42. Anchor bar 42, which includes a surface 41 for engaging the cable, is initially disposed in opening or chamber 40 in the top of strain relief housing 30. As shown in Figures 5b and 5e, when anchor bar 42 is in this inoperative position, it is supported in opening 40 via hinge 43 and temporary side tabs (not shown) extending from the walls forming opening 40. When the cable is in place in passage 34 and is ready to be secured, downward force is applied by the installer or operator to anchor bar 42 such that anchor bar 42 is compressed and pivots about hinge 43 until it enters passage 34 so that surface 41 is substantially parallel with the axis defined by chamber 34 (see Figure 5e). In this position, surface 41 enters into engagement with the cable jacket so that the cable is firmly held within chamber 34, but the structural integrity of the cable is not unduly distressed. Once inside chamber 34, anchor bar 42 tends to retain its original shape and a portion thereof engages the upper surface 39 of the wall forming chamber 34, as shown in Figure 5e. Once in its operative position, anchor bar 42 is effective in preventing relative movement between the strain relief housing 30 and the cable external to the housing from affecting the cable position internal to the housing. The anchor bar as just described is the subject of U. S. Patent No. 5,186,649 to Fortner *et al.*, which is herein incorporated by reference.

Strain relief housing 30 and jack interface housing 15 are joined together by the alignment of positioning guides 56 (see Figures 4 and 5d), extending from strain relief housing 30, in complementary positioning channels 27 in jack interface housing 15 (see Figure 3). Once the two housing pieces are aligned and pressed together, attachment clips 54 snap into side apertures or locking slots 25 in jack interface housing 15 for a tight and secure fit. Separating the two housing pieces requires simultaneous inward pressure on attachment clips 54 while pulling

the two housing pieces apart. Once attachment clips 54 are free from side apertures 25, the housing pieces separate easily.

When the two pieces, strain relief housing 30 and jack interface housing 15, with carrier 84 containing the blades 70 in position in housing 15, are forced together, the wires in their channels in housing 30 are each forced into a corresponding IDC positioned to receive it, thereby completing the connection between wire and its corresponding blade 70.

Strain relief housing 30 is the subject of copending application, Serial Number 08/922,621 (docket number Chapman 6-1-5-2-14), by Chapman *et al.*, submitted concurrently with the instant application.

Tunable Blade Structure

Referring now to Figures 6 and 7a through 7c, a crosstalk assembly comprising a tunable blade structure for use in high frequency communication plug 12 is shown. The illustrated embodiment is for terminating an eight conductor cable in which the conductors 70a, 70b, 70c, 70d, 70e, 70f, 70g and 70h are arranged in four conductor pairs, I, II, III and IV. The tunable blade structure of the present invention consists of four pairs of conductive members comprising tunable blades 70. Tunable blades 70 include IDC ends 72, for electrically connecting with the conductors from the cable, as discussed in the foregoing, and spring contacting jack interface ends 78, which in the preferred embodiment are advantageously bifurcated, for establishing electrical connections with jack springs held in a jack or receptacle and forming locating slots in the ends.

Each IDC end 72 is bifurcated and comprises dual, elongated prongs 74 forming a narrow slot 76 therebetween. The tips of dual prongs 74 are beveled to facilitate reception of an insulated conductor from the cable and the inner edges of the prongs have sharp edges for cutting through the conductor insulation. IDC ends are geometrically arranged in blade carrier 84 to match the configuration of the IDC control channels 52 in strain relief housing 30 (see Figures 5a and 7c) and are so arranged by the carrier 84, as discussed hereinafter. In operation, dual prongs 74 are positioned in their corresponding IDC control channel 52 so that the

two prongs straddle a conductor held in an associated conductor control channel 50 (see Figure 5a) and cut through its insulation to establish electrical contact. Slot 76 is sufficiently narrow to ensure that the insulation of the conductor is pierced by dual prongs 74 as the conductor is received in slot 76 so that the prongs are in electrical contact with the wires or conductors. Advantageously, a highly reliable electrical connection is formed with substantially all the conductor insulation remaining in place.

As discussed above, crosstalk between conductors can become problematic for modular plugs, especially when operated at high frequencies. However, in the instant invention, tunable blades 70 can be "tuned" to optimize crosstalk that may occur by varying the inductive and capacitive coupling developed between the blades. Tunable blades 70 have three regions for adjusting the device's electrical properties as shown in Figure 7b: capacitive coupling region 92, inductive coupling region 94 and isolation region 96. Capacitive coupling region 92 is located at the jack interface end 78. In this region, each blade is formed with a plate position 90 so that the blades are formed into substantially parallel plates spaced from one another. When carrying electrical signals, these plates form capacitors causing capacitive coupling of signals between the blades thereby creating crosstalk. Similarly, because one of the conductor pairs needs to be split (usually the pair designated 70e and 70f in Figure 7a) when aligning the conductors side-by-side, the two tunable blades, 70e and 70f must cross-over the other blades (see Figures 6 and 7a), thereby creating inductive crosstalk. Each of these blades 70e and 70f is formed with a u-shaped portion, 93, 95 respectively, which forms an inductive loop in inductive coupling region 94. This inductive loop functions to generate crosstalk. Isolation region 96, in which the blades are well spaced and insulated from one another, comprises the remainder of tunable blades 70 between the two ends.

Based on the intended application, and the particular frequencies of the signals to be carried, the plug fabricator can manipulate the capacitance and inductance developed between the blades to optimize the effects of crosstalk. For example, capacitance between any pair of adjacent blades can be adjusted in capacitive coupling region 92 by changing the surface area of the blade plates 90 in

that region, changing the distance between the blade plates 90, or by changing the material separating the blade plates to an alternative material having a different dielectric constant or merely leaving the space open between the plates. In inductive coupling region 94 the length of the inductive loops can be changed as can the material separating the loops. Finally, the positioning of the capacitive coupling region 92, inductive coupling region 94, and isolation region 96 can be varied as a further adjustment to the electrical properties. These various adjustments are made during design and manufacture of the blades and the blade carrier. Thus, these components may actually be included in a family of slightly different construction depending upon the intended frequency of operation.

While it will likely be desirable in future applications to eliminate virtually all crosstalk in the communication plug, legacy systems (i.e., current jacks) require a predetermined amount of crosstalk in the plug for optimum performance. Legacy jacks are engineered to compensate for crosstalk in the communication plug; thus, a well designed plug should generate crosstalk that is complementary to that used in the jack so the combination of the two crosstalk signals cancel each other out. In addition to generating the appropriate crosstalk, the communication plug is also required to meet certain terminated open circuit (TOC) electrical characteristics as proscribed in standards set forth by the International Electrotechnical Commission (IEC). These standards effectively place limits on the capacitance developed between the blades or conductors in a plug. With these prerequisites, the high frequency communication plug according to the instant invention is particularly effective for applications involving legacy jacks. For example, instead of tuning out crosstalk, capacitive coupling region 92, inductive coupling region 94 and isolation region 96 can be adjusted to generate a predetermined amount of crosstalk based on the frequency of operation and the compensating crosstalk characteristics of the jack in which the plug will be used. Moreover, inductive coupling region 94 provides the ability to adjust the ratio of inductive and capacitive coupling so that the amount of capacitive coupling is in compliance with IEC standards. Advantageously, the communication plug according to the instant invention is both backward compatible with existing jacks and can be tuned to accommodate the requirements of future jacks or evolving electrical standards.

It has been found in practice that positioning capacitive coupling region 92 and inductive coupling region 94 closest to jack interface end 78 is the most effective because the jack is designed to counteract or compensate for the crosstalk introduced in the plug as discussed hereinbefore. Moving capacitive coupling region 92 and inductive coupling region 94 away from jack interface end 78 introduces an undesirable delay in canceling out crosstalk introduced in the plug. The degree of tuning thus available can materially reduce or adjust crosstalk, but, as discussed hereinbefore, there is dependence upon the frequency of the signals being carried by the conductors. The installer can, where desirable, vary the capacitance between two adjacent plates by drilling one or more holes in either or both of the plates. This has the effect of slightly decreasing the capacitive coupling to avoid overcompensation when seeking to eliminate crosstalk or to comply with IEC standards that limit the amount of capacitive coupling allowed in the plug.

In the blade assembly as shown in Figures 6 and 7a, it can be seen that each of the blades 70n has a capacitance plate 90, and blades 70e and 70f have u-shaped portions 93 and 95 respectively. The inductive loops formed by portions 93 and 95 generate more crosstalk than the blades without the u-shaped portions. The inductive loops are effective in generating the desired amount of crosstalk in the plug to complement counteracting crosstalk designed into a jack. This is especially important because IEC standards place limits on the amount of capacitive coupling that can be designed into the plug. Thus, the ratio of capacitive to inductive crosstalk can be adjusted as desired.

The blades 70 have been shown in one configuration for four pairs of wires to be connected thereto. It can be appreciated that the tunability of the blades having the unique properties discussed can be used to advantage in other configurations for different numbers of wire pairs.

Tunable blades 70 are the subject of copending application, Serial Number 08/922,580 (docket number Larsen 6-4-8-13), by Larsen *et al.*, filed concurrently with the instant application.

Carrier

In order that tunable blades 70 are positioned in their proper positions with respect to strain relief housing 30 in general and IDC control channels 52 in particular, carrier 84 is used as shown in Figures 8 through 11. Carrier 84 is preferably made of a suitable plastic or dielectric material, which may be different for different electrical frequencies of use. With reference to Figure 8, a plurality of grooves or channels 86 are disposed on the upper and lower (not shown) surfaces of blade carrier 84. Figure 9 shows the relationship of blades 70 to blade carrier 84 as the blades are received in grooves 86. Carrier 84 is instrumental in adjusting the electrical properties of capacitive coupling region 92, inductive coupling region 94 and isolation region 96 (see Figure 7) as discussed above. For example, the type of material blade carrier 84 is made from, the width between grooves 86, and the positioning of the capacitive coupling, inductive coupling and isolation regions with respect to each other all affect the electrical characteristics of the plug and require cooperation between blades 70 and blade carrier 84. It is envisioned that for a particular application, plug designers will develop the correct geometric design of both blades 70 and blade carrier 84 so that the desired electrical response is achieved. For example, in place of blades 70 and carrier 84, a wired lead frame structure could be used in which the wires are bent or configured in such a manner that the desired electrical characteristics (i.e., capacitance, inductance) between the wires are achieved. Regardless, of the structure or carrier used, or the type of conductor used (i.e., blade, wire), the conductors should be sufficiently isolated from one another to prevent excessive signal coupling due to operation at high frequencies.

Figures 10 and 11 provide two views of the blade-carrier assembly together. These figures provide the best illustration of the translation from a substantially circular arrangement at IDC ends 72, to a linear arrangement at jack interface end 78. It should be clear to one skilled in the art that as alternative cable or cord types come into favor, blades 70 and carrier 84 can be engineered to match the conductor arrangement within the cable or cord. Both the structural and electrical benefits of leaving the cable conductors relatively undisturbed when terminating to IDC ends 72 were discussed earlier.

A clearer understanding of the function of the grooves 86 and the routing of the blades 70 therein can be had with reference to Figure 7a and 7c which, although Figure 7a depicts the blades 70, it is equally a map of the grooves on both the upper and lower surfaces of the carrier 84 as looked at from above. The blade arrangement of Figure 7a is for use with a cable having four conductor or wire pairs--I, II, III and IV. In Figure 7c, it can be seen that the blades for pairs II and III are in grooves on the upper surface of the carrier body 84 and those for pairs I and IV are in grooves on the lower surface of the carrier body 84. Thus, the blades for pairs I and IV are spaced from pairs II and III by approximately the thickness of the body of carrier 84. Referring to Figure 7a, and treating it as a map of the grooves in carrier 84, the pair of blades 70g and 70h, which connect to wire pair IV at the connectors 72 are routed by the grooves in the lower surface of member 84 straight to their position in the planar array at the jack spring end at terminals 7 and 8. The pair of blades 70a and 70b, which connect to wire pair I, are routed by their grooves in the lower surface of member 84 to terminals 4 and 5, as shown in Figure 7a.

The pair of blades 70e and 70f, which connect to wire pair III, are routed by their grooves in the top surface of carrier body 84 to terminals 3 and 6 respectively, thus causing the terminals for pair III to straddle those for pair I, as shown. This routing results in blade 70f on the upper surface crossing over blade 70g on the lower surface, and blade 70e on the upper surface crossing over blades 70a and 70b on the lower surface. The crossing blades are, therefore, separated by the thickness of the carrier, which spacing results in less interaction between the crossing blades.

In addition, the pair of blades 70c and 70d, which correspond to pair II, are routed on the upper surface of member 84 directly to terminals 1 and 2. Such routing causes blade 70d to cross over blade 70a on the lower surface.

Thus, it can be seen that carrier 84 produces a transition of the blades from a substantially radial array to a planar array, thereby relieving the installer of the tedious process of forming the transitions himself, which requires a routing such as is shown in Figure 7a.

Locating Bar

The blades 70, when mounted in carrier 84, and when carrier 84 is in turn mounted in jack spring housing 15, have their jack interface ends 78 aligned in a substantially planar array, as best seen in Figure 10, thereby accomplishing a translation from a circular array or grouping of wires to a linear, side-by-side array of conductors. Inasmuch as the blades are placed within the grooves or channels 86 in carrier 84 but not otherwise affixed thereto, it is desirable that there be some means of ensuring that the planar array of ends 78 offers a uniform set of contacts for the jack springs, with no misalignment.

In accordance with the present invention, uniform alignment of the blades 70, and, more particularly, blade ends 78 is accomplished by means of a locating and alignment bar 28, as best seen in Figures 12 and 13. Bar 28 has a plurality of slots or ribs 101 therein, uniformly spaced apart, for receiving the ends 78 of the blades 70. More particularly, the top and bottom of the alignment notch 80 in each blade slips around the alignment bar 28 at a slot or rib 101. In this manner, the blades 70 are prevented from shifting laterally. Blades 70 are also aligned vertically, or, more properly, are prevented from becoming vertically misaligned by means of bar 28 being dimensional to slip with the alignment notches 80 of the several blades 70, in a slip fit. Thus, alignment bar 28 locates and fixes the position of each blade 70 in the array of blades, and proper electrical contact between each jack spring node 82 and its corresponding jack spring is assured.

This arrangement for locating jack spring nodes 82 is an improvement over the prior art as the precision with which the blades themselves are engineered guarantees the final blade positioning. Conversely, previous methods relied upon assembly tooling and proper assembly techniques to finalize blade positioning. For example, it is common for a blade having insulation piercing tangs to be pressed into the end portion of an insulated wire that is disposed within a trough of a plug body. This technique tends to suffer from both electrical connection failures and misalignment of the blades themselves.

The jack spring housing and locating bar 28 is the subject of copending application, Serial Number 08/922,623 (docket number Reichard 11-1), by Reichard *et al.*, submitted concurrently with the instant application.

The principles of the invention have been illustrated herein as they are applied to a communications plug. From the foregoing, it can readily be seen that the unique plug is one that minimizes operations by the installer or other user in terminating a cable, whether of the flat, ribbon type or the circular tube type. The unique strain relief housing is applied or connected to the end of the cable with a minimum of operations, the only operation being the flaring of the wires of the cable in a radial pattern, without the necessity of cross-over or the like. The blade carrier routes the tunable blades to produce a linear array of terminals at its end remote from the cable and the blades are tunable to compensate for crosstalk included in the carrier assembly. When the carrier is inserted in the jack spring housing, the locating bar ensures that the blades remain fixed in proper position, and assembly of the plug is completed by simply pressing the strain relief housing and the jack spring housing together until they latch. The latching occurs after the IDC ends of the blades have electrically connected to the arrayed wires in the strain relief housing. Thus the operator's or installer's manipulation is limited to the initial arraying of the wires in the cable in a radial or circular pattern.

In concluding the detailed description, it should be noted that it will be obvious to those skilled in the art that many variations and modifications may be made to the preferred embodiment without substantially departing from the principles of the present invention. All such variations and modifications are intended to be included herein within the scope of the present invention, as set forth in the following claims. Further, in the claims hereafter, the corresponding structures, materials, acts, and equivalents of all means or step plus function elements are intended to include any structure, material, or acts for performing the functions with other claimed elements as specifically claimed.

~~Claims~~:

The claims defining the invention are as follows:

1. A blade carrier assembly for use in a communication plug for terminating a cable having a plurality of pairs of conductors, said blade carrier assembly comprising:

a carrier member having an upper surface and a lower surface spaced therefrom and first and second ends;

a plurality of grooves in said upper surface and a plurality of grooves in said lower surface for routing conductive blades extending from said first end to said second end;

a plurality of conductive blades carried in said grooves for electrically connecting to the wires in the cable at said first end and for electrically connecting to jack springs at said second end;

said grooves orienting said blades in a substantially radial array at said first end, with each pair of blades adjacent to each other in the array being adapted to connect to a discrete conductor pair from the cable; and

said grooves orienting said blades in a planar array at said second end.

2. The blade carrier assembly as claimed in claim 1, wherein the ends of said blades at said first end each has an insulation displacement connector for connecting to the wire associated therewith in the array of wires.

3. The blade carrier assembly as claimed in claim 1, wherein the ends of said blades adjacent said second end are bifurcated, thereby forming a locating notch in the end of each of said blades.

4. The blade carrier assembly as claimed in claim 1, wherein said grooves orient at least a first pair of blades representing a conductor pair to positions in said planar array where they are separated from each other by the blades of a different pair.

5. The blade carrier assembly as claimed in claim 4, and further comprising a plurality of spaced slots at said second end for containing said planar array of blades.

6. The blade carrier assembly as claimed in claim 4, wherein the blades of said first pair are routed by said grooves to cross over at least one blade of a different pair of blades.

7. The blade carrier assembly as claimed in claim 6, wherein said blades of said first pair are in grooves in said upper surface and said at least one blade is in a groove in said lower surface.

8. The blade carrier assembly as claimed in claim 6, wherein there are a plurality of cross overs among the several blades, each blade that crosses another blade being in a groove on one of said upper and lower surfaces, and each blade that is crossed being in a groove on the other of said upper and lower surfaces.

9. A blade carrier assembly for use in a communication plug for terminating a cable carrying a plurality of conductors arranged in conductor pairs, the conductor pairs being arranged in a substantially radial array in a housing with the wires of each pair being adjacent each other, said assembly comprising:

a blade carrier member comprising a body having an upper surface and a lower surface spaced from said upper surface and first and second ends;

a first plurality of grooves on said upper surface and second plurality of grooves on said lower surface;

a plurality of conductive blade members, each blade member being carried in one of said grooves and having a wire connecting end and a jack spring connecting end;

said grooves orienting said wire connecting ends of said blades in a substantially radial pattern of pairs of blades corresponding to the radial pattern of wire pairs at said first end of said carrier members; and

said grooves orienting said jack spring connecting ends of said blades in a planar array of spaced ends of said blades at said second end of said carrier member.

10. A blade carrier assembly as claimed in claim 9, wherein at least a first pair of blades corresponding to a first wire pair is carried in grooves on said first surface of said carrier member, and at least a second pair of blades corresponding to a second wire pair is carried in grooves on said second surface of said carrier member.

11. A blade carrier assembly as claimed in claim 10, wherein at least one blade of said first pair of blades crosses over at least one blade of said second pair of blades and is spaced therefrom by approximately the spacing between said first and second surfaces of said body.

12. A blade carrier assembly as claimed in claim 10, wherein said first pair of blades is routed by said grooves to said planar array at said second end of said carrier, wherein said blades of said first pair are separated from each other by the blades of said second pair interposed therebetween.

13. A blade carrier assembly as claimed in claim 12, wherein one blade of said first pair of blades crosses over both blades of said second pair and the other blade of said first pair of blades crosses over one blade of a third pair of blades, the blades of said first pair being in grooves on said first surface and the blades of said second and third pairs being in grooves on said second surface.

14. A blade carrier assembly as claimed in claim 9, wherein said wire connecting end of each blade terminates in an insulation displacement connector.

15. A blade carrier as claimed in claim 9, wherein said jack spring connecting end of each of said blades is bifurcated to form a locating notch on said end.

16. A blade carrier assembly, substantially as hereinbefore described with reference to the accompanying drawings.

DATED this First Day of September 1998

~~Lucent Technologies Inc~~
Avaya Technology Corp.
Patent Attorneys for the Applicant

SPRUSON & FERGUSON

AUSTRALIAN PATENT OFFICE SEC 113

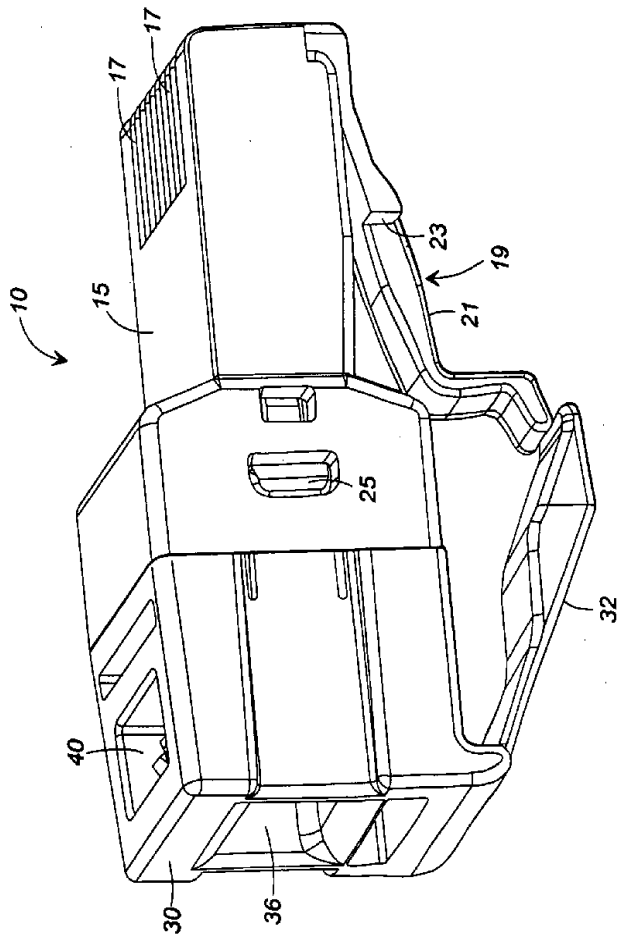

FIG. 1

83056/98

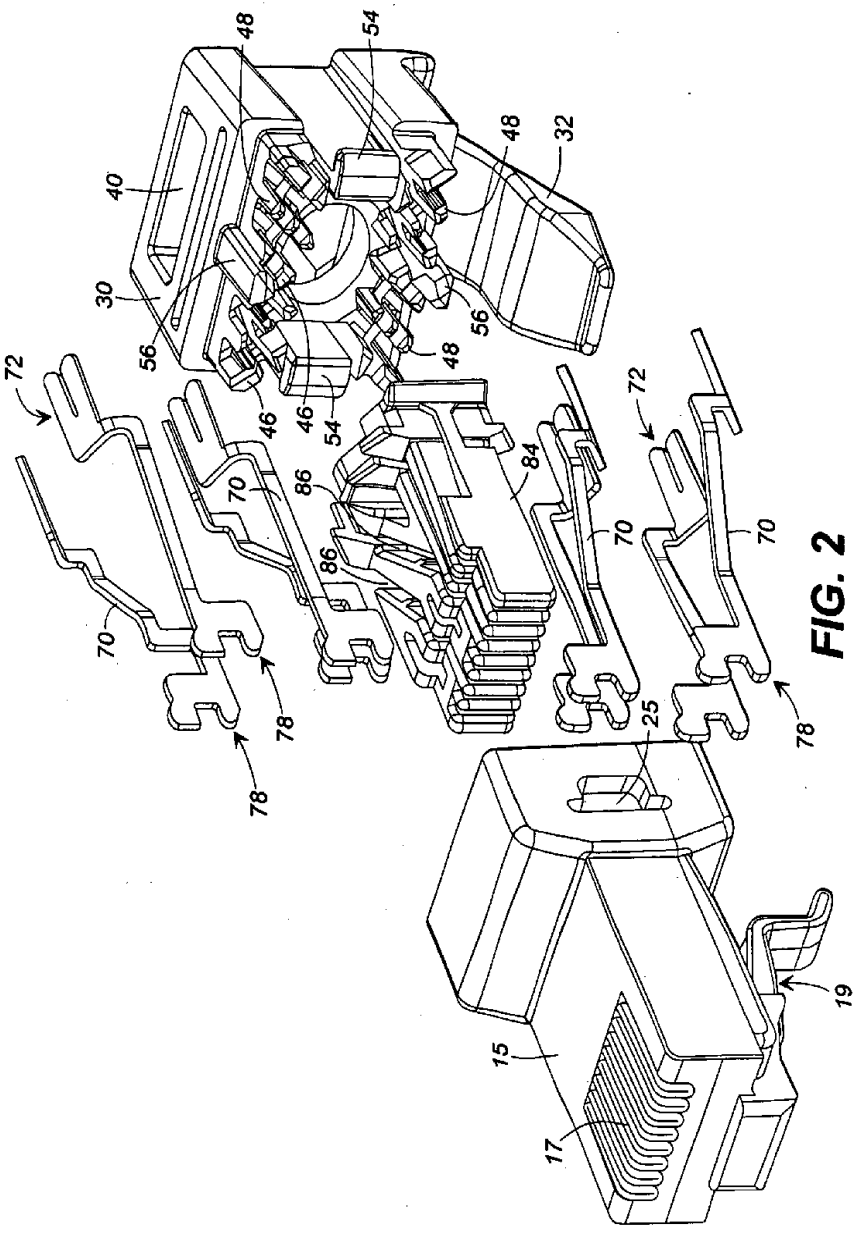

FIG. 2

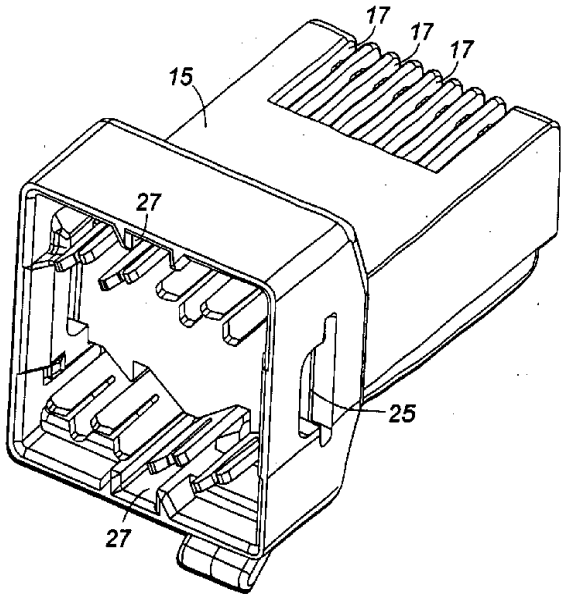
17
17
17
15
27
25
27

FIG. 3

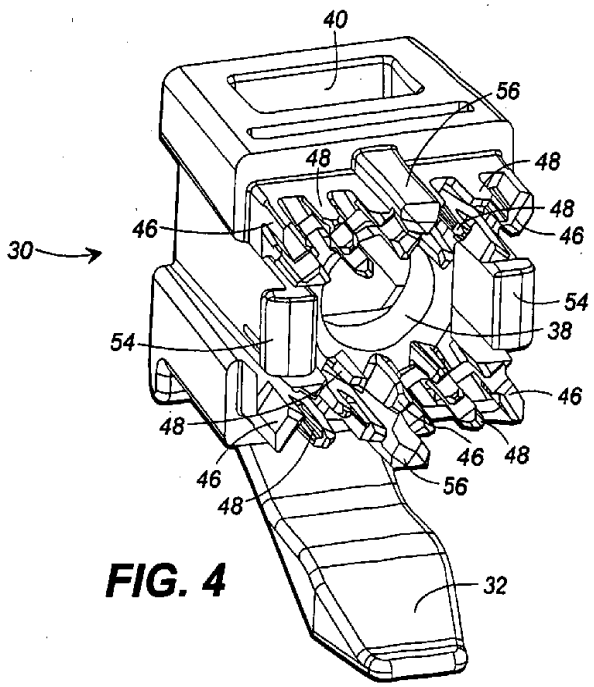
40
56
48
48
48
46
46
30
54
38
54
46
48
46
48
46
56
48
32

FIG. 4

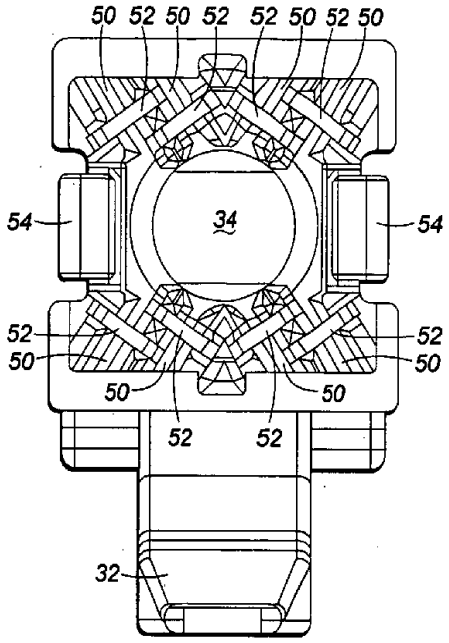
50
52
50
52
52
50
52
50
54
34
54
52
50
52
50
50
50
52
52
32

FIG. 5a

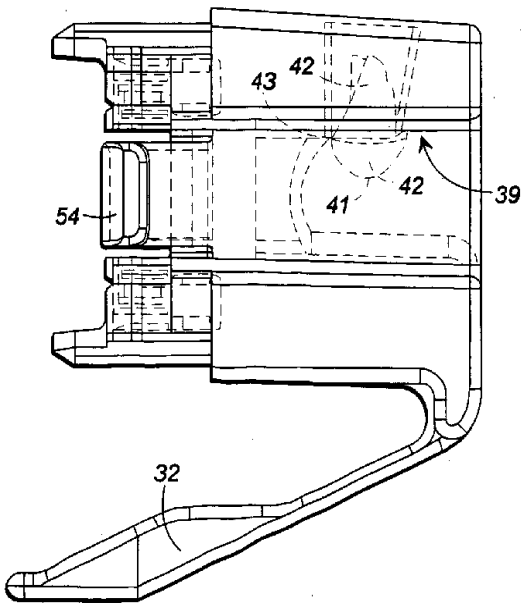
43
42
42
39
41
54
32

FIG. 5b

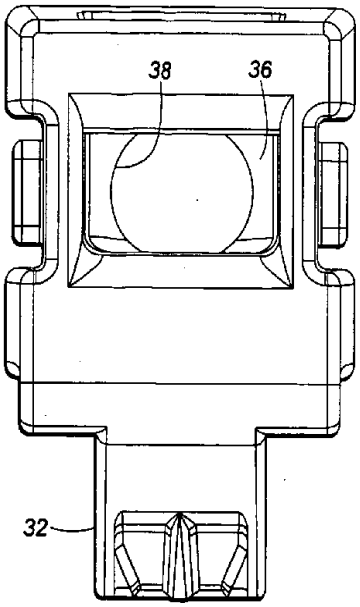

FIG. 5c

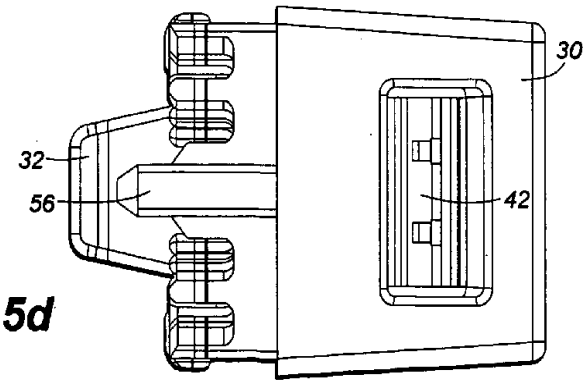

FIG. 5d

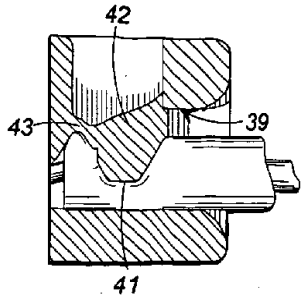

FIG. 5e

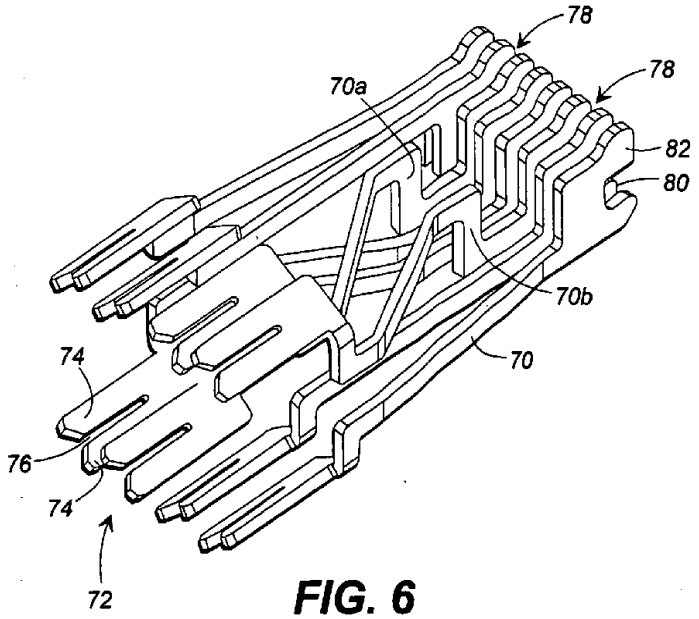

FIG. 6

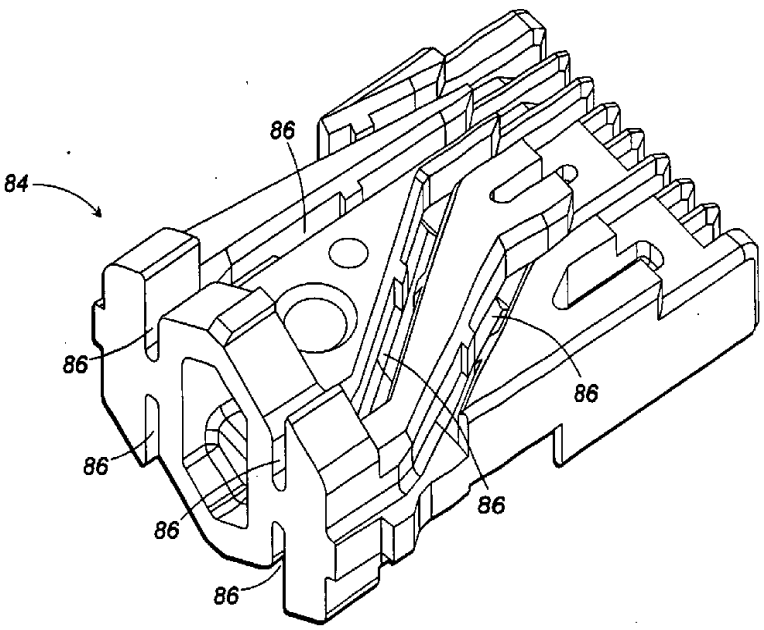

FIG. 8

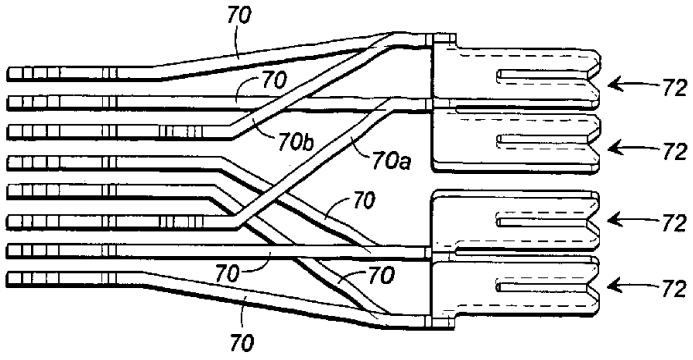

FIG. 7a

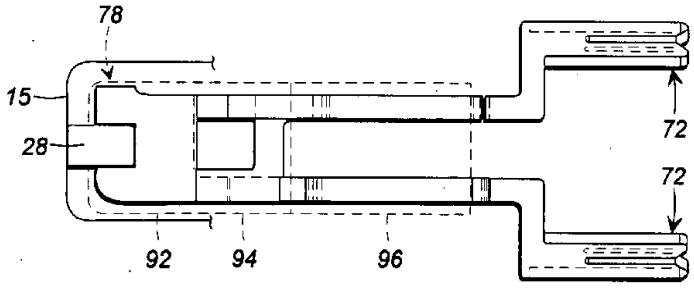

FIG. 7b

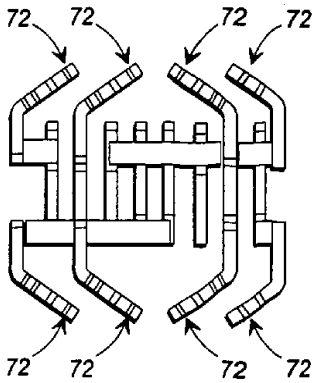

FIG. 7c

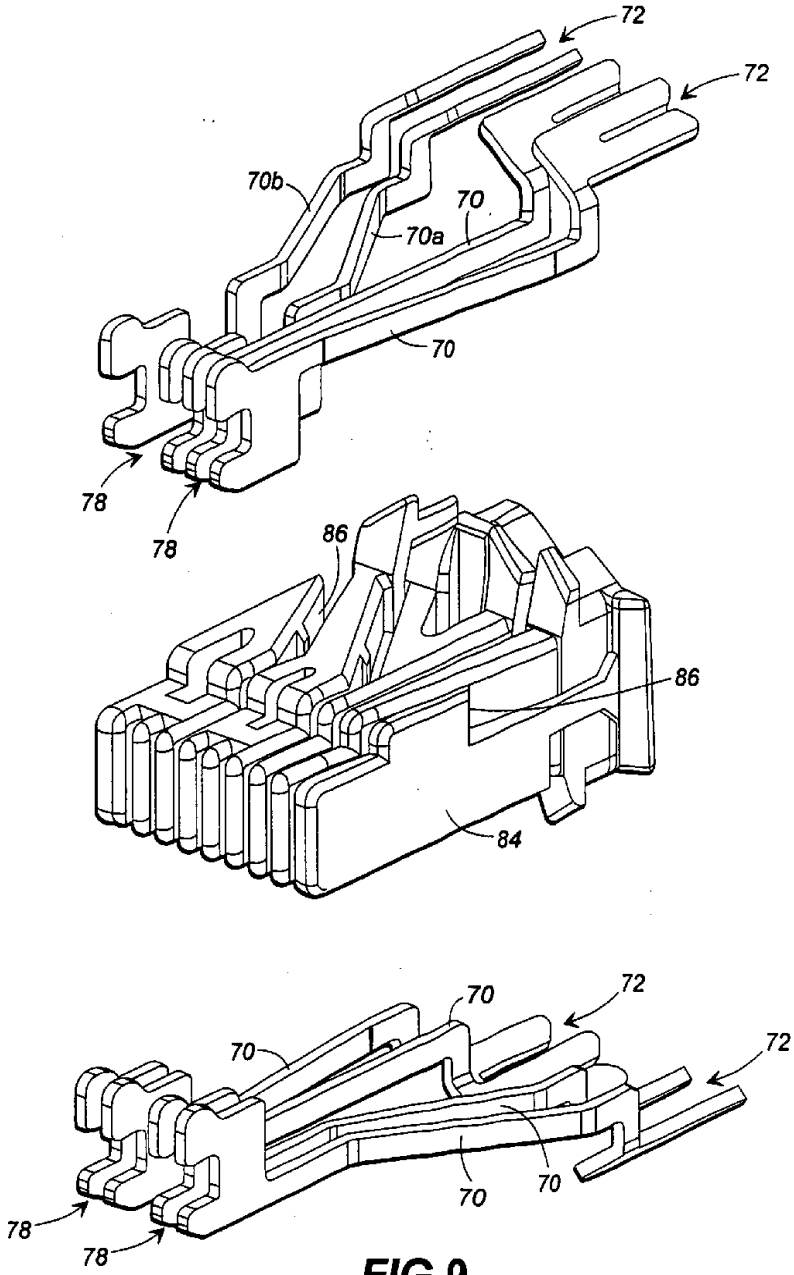

FIG.9

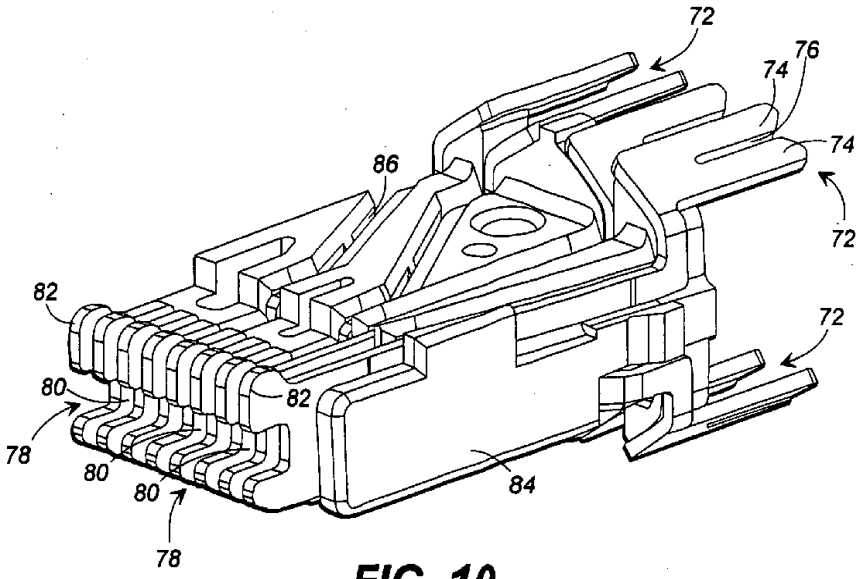
72
76
74
74
86
72
82
72
80
82
78
80
80
84
78

FIG. 10

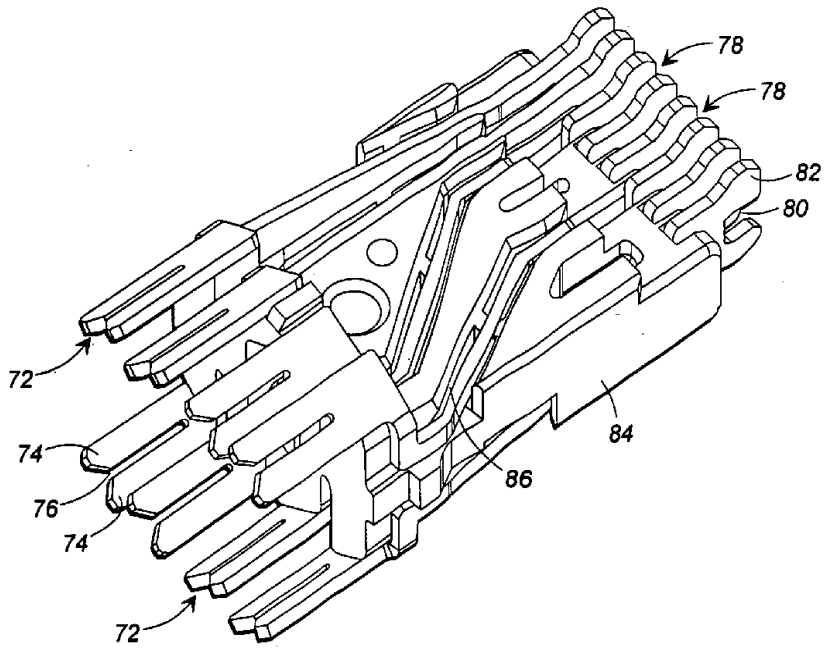
78
78
82
80
72
74
76
74
72
84
86

FIG. 11

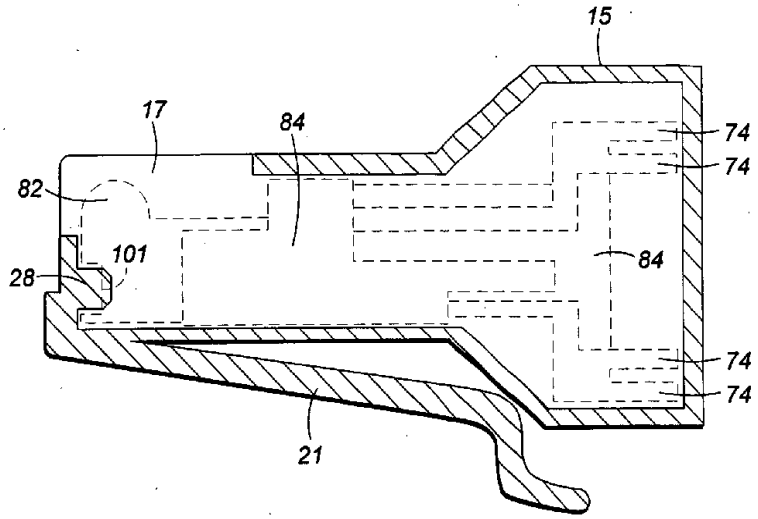

FIG. 12

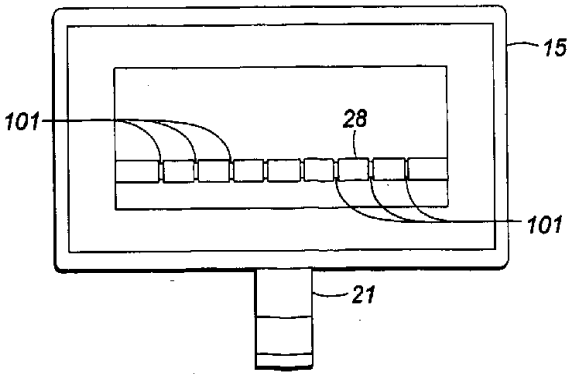

FIG. 13