J. THERIO.

FOLDING BOX OR CRATE.

APPLICATION FILED APR. 24, 1916.

1,204,611.

Patented Nov. 14, 1916.

2 SHEETS—SHEET 1.

Fig. 1

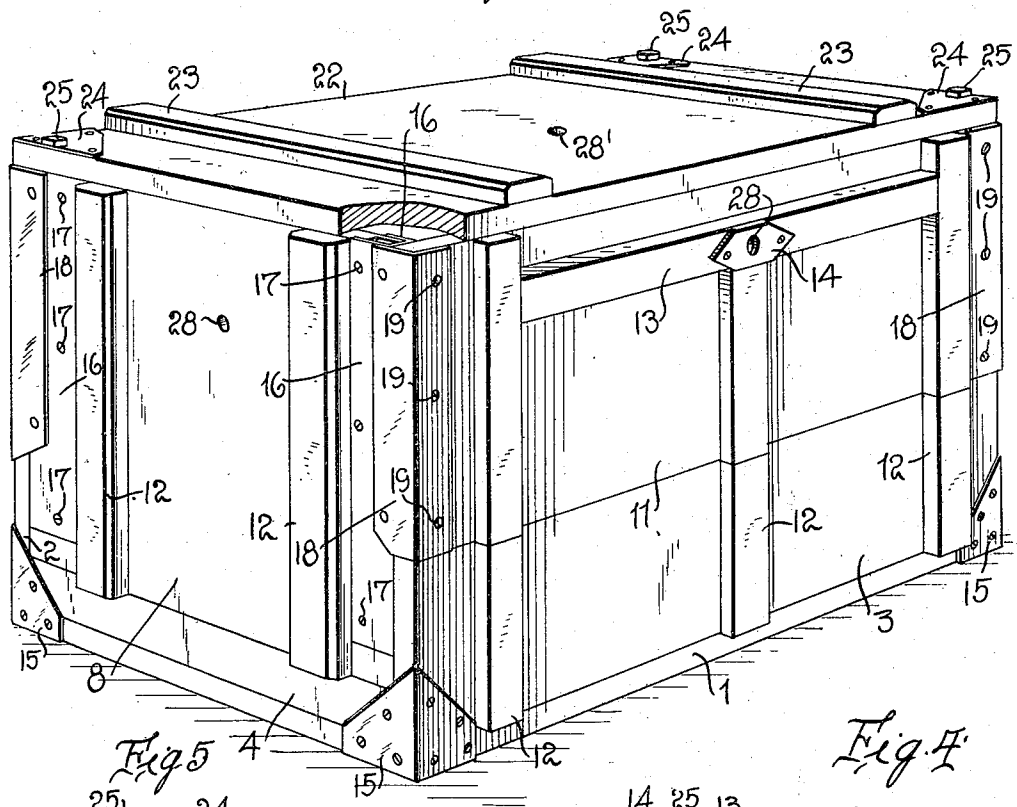

Fig. 5

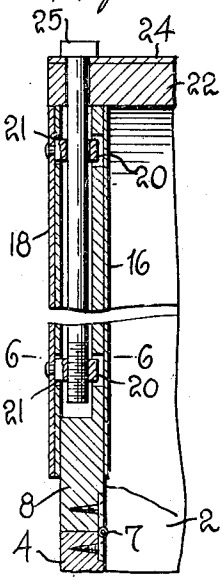

Fig. 4

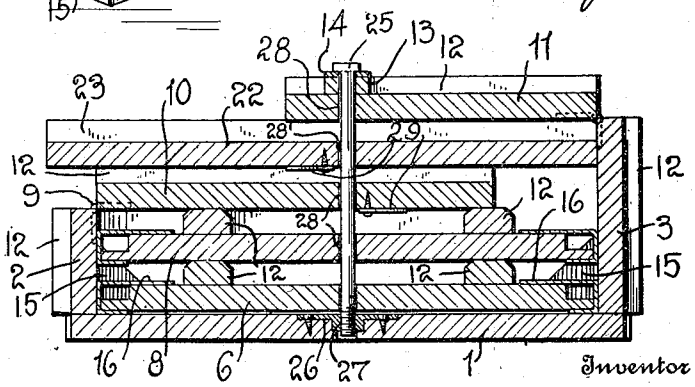

Inventor

JAMES THERIO

By Watson E. Coleman

Attorney

THE NORRIS PETERS CO., PHOTO-LITHO., WASHINGTON, D. C.

J. THERIO.

FOLDING BOX OR CRATE.

APPLICATION FILED APR. 24, 1916.

1,204,611.

Patented Nov. 14, 1916.

2 SHEETS—SHEET 2.

Fig. 3

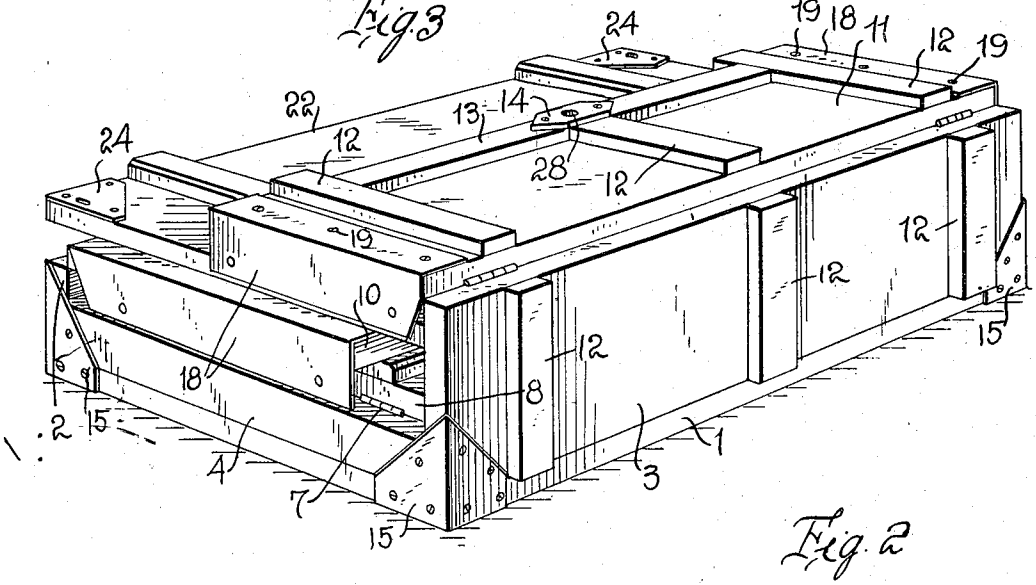

Fig. 2

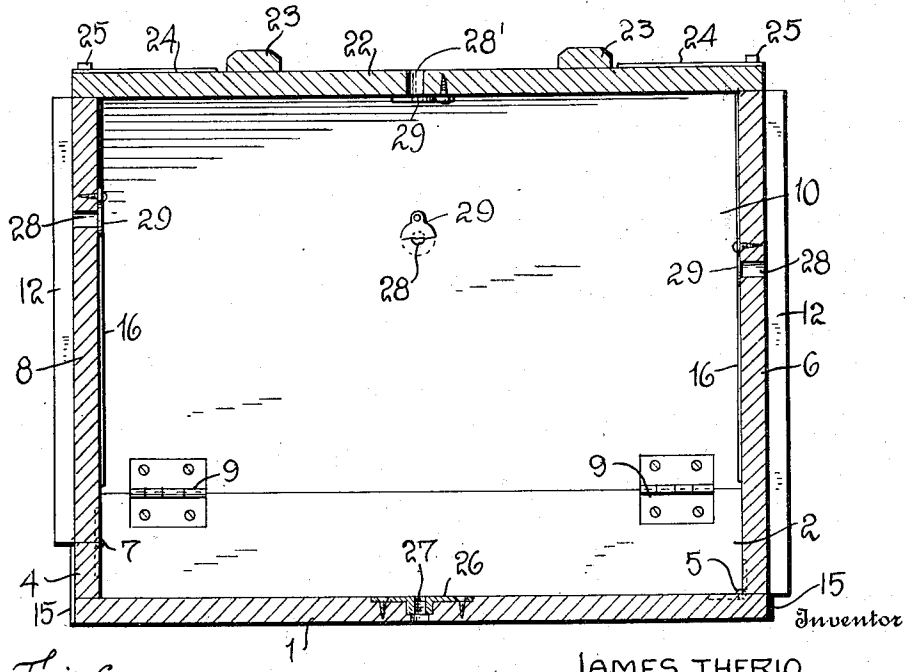

Fig. 6

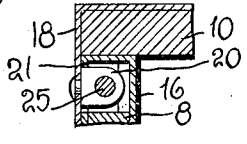

Inventor

JAMES THERIO

By Watson E. Coleman

Attorney

THE NORRIS PETERS CO., PHOTO LITHO., WASHINGTON, D. C.

UNITED STATES PATENT OFFICE.

JAMES THERIO, OF SUMMIT LAKE, WISCONSIN, ASSIGNOR OF ONE-HALF TO DANIEL ROBERT HALE, OF ANTIGO, WISCONSIN.

FOLDING BOX OR CRATE.

1,204,611. Specification of Letters Patent. Patented Nov. 14, 1916.

Application filed April 24, 1916. Serial No. 93,211.

To all whom it may concern:

Be it known that I, JAMES THERIO, a citizen of the United States, residing at Summit Lake, in the county of Langlade and State of Wisconsin, have invented certain new and useful Improvements in Folding Boxes or Crates, of which the following is a specification, reference being had to the accompanying drawings.

This invention relates to folding crates or boxes and has for its principal object to generally improve and simplify the means for holding the same either in a set-up or folded position.

Another object of the invention is to provide for the rigidity of the box when in a set-up position and to provide means to hold the same in a folded position which will prevent movement of any part of the box relative to the other parts of the same.

A further object is to provide a box or crate of this character which will be strong and durable in construction and which will be cheap to manufacture as well as being thoroughly reliable and efficient in use.

Still another object of the invention is to provide a box or crate which will take up but a minimum of space when in a folded condition.

With the foregoing and other objects in view, the invention consists in the novel features of construction, combination and arrangement of parts as will be hereinafter more fully described, illustrated in the accompanying drawings and claimed.

In the drawings, Figure 1 is a perspective view of a crate or box embodying the improvements of my invention; Fig. 2 is a longitudinal sectional view thereof; Fig. 3 is a perspective view with the parts in a folded position; Fig. 4 is a sectional view with the parts folded; Fig. 5 is a detail sectional view showing one of the fastening devices; and Fig. 6 is an enlarged fragmentary view taken substantially on the line 6—6 of Fig. 5.

Referring to the drawings by numerals wherein is illustrated the preferred embodiment of my invention, 1 designates the bottom of the improved box which has secured adjacent its longitudinal edges and extending throughout the length thereof a pair of strips 2 and 3, the latter of which is of slightly greater height than the former. Also secured to the bottom adjacent one end thereof and extending transversely of the same and abutting the inner faces of the strips 2 and 3 is a short strip 4 which is of slightly less height than the strip 2.

Hinged, as at 5, for inward folding movement upon the upper face of the bottom 1 is an end 6 which is of a width to engage the inner faces of the strips 2 and 3, the same being of any desired height as will be understood.

Hinged as at 7 to the strip 4 for inward swinging movement is a second end 8 which is of similar construction to the end 6 and which is of a height corresponding to the height of the first end.

The strip 2 has hinged thereto as at 9, for inward swinging movement, a side 10 which is of a length to extend throughout the length of the strip and abut the vertical edges of the ends 6 and 8, the same being of the same height as the ends.

Hinged to the strip 3 in a manner similar to the hinging of the side 10 to the strip 2 is a second side 11 which is also adapted for inward swinging movement, the same being of a length to extend throughout the length of the strip 3 and abut the vertical edges of the ends 6 and 8 opposite to those in engagement with the side 10. Each of the sides and ends and strips 2 and 3 are provided upon their outer faces with reinforcing strips or battens 12 as is shown, while the side 11 is provided with an additional longitudinally extending strip 13 which is provided upon its outer face with a plate 14 having an opening therein in alinement with an opening extending transversely of the strip and side for a purpose which will presently appear.

Each of the strips 2, 3 and 4 is secured to the bottom 1 in any suitable manner as by means of nails, screws or the like and is additionally rigidly held thereon by means of the angular plates 15, as is illustrated to advantage in Fig. 1 in the drawings.

A plurality of sheet metal elements 16 are provided which are of substantially U-shape in cross section and one of these elements is secured to each vertical edge of each of the ends in any suitable manner as by means of screws or like fastenings indicated at 17, these elements preferably being of a length to extend throughout the major portions of the height of the ends as is shown.

Angular sheet metal plates 18 are secured to the end edges of the sides 10 and 11 as by means of the screws 19 and a portion of each of these plates extends beyond the inner face of each of the sides so as to overlap the elements 16 when the ends and sides are in a set up position. Secured in any suitable manner to the inner faces of the overlapping ends of these plates are pairs of spaced lugs 20, one being located near the upper edge of each of the plates and one adjacent the lower edge of each plate, the lower of each of these pairs of lugs being provided with screw-threaded openings while the upper are provided with smooth openings of slightly greater diameter than the threaded opening of the lower lugs for a purpose which will likewise presently appear.

Each of the elements 16 has formed therein a pair of slots 21 which are alined with cut-out portions adjacent the vertical edges of the ends and these slots are adapted to receive the lugs 20 when the ends are swung to an upright or set-up position as is illustrated in Fig. 5 of the drawings.

A top 22 is provided which is of a size corresponding to the size of the bottom 1, the same being provided upon its upper face with reinforcing strips 23 which are similar to the strips 12. Also secured upon the upper face of the top adjacent each corner thereof are metallic plates 24 which are provided with transverse openings in alinement with similar openings in the top to permit bolts or other similar fastening elements indicated at 25 to be passed therethrough. These transverse openings in the top are so arranged that when the sides and ends of the box are in a set-up position with the lugs 20 engaged in the recesses of the ends, the same will aline with the openings in the lugs, the top being adapted for engagement with the upper edges of the ends and sides when the same are in a set-up position as will be understood. After the sides have been folded outwardly and the ends have been folded in a like manner and the lugs 20 engaged in the recesses of the ends, the top is placed upon the upper edges of the sides and ends and the bolts 25 are passed downwardly through the openings in the corners of the top through the upper of the lugs 20 and downwardly through the recesses at the vertical edges of the ends and then threaded into engagement with the threaded openings of the lower of the lugs 20, the same being drawn down so as to tightly clamp the top upon the box. By this arrangement it will be noted that the bolts coöperate with the lugs and slots in the elements 16 to lock the sides and ends against folding movement and thus retain the box rigidly in a set-up position, the plates 24 acting in the nature of washers to prevent mutilation of the outer face of the top when clamping the same upon the box. By removing the bolts it will be obvious that the top may be readily taken off of the box and also that the sides and ends will be permitted of inward folding movement. In folding the box, the end 6 is first folded inwardly so as to lie in engagement with the upper face of the bottom and the end 8 is then folded downwardly upon the outer face of the first end. The side 10 is next folded inward upon the outer face of the end 8 and the top 22 is then placed upon the outer face of this side, after which the side 11 is folded inwardly upon the outer face of the top as is shown.

Secured in any suitable manner to the upper face of the bottom 1 centrally thereof is a plate 26 which is provided with a screw-threaded opening 27. Each of the ends and sides has a transverse opening 28 extending therethrough, which openings are so arranged upon the sides and ends as to register with the threaded opening 27 when the sides and ends are in an inward folded position, the top being also provided with a centrally arranged transverse opening 28′ which is likewise adapted to be arranged in alinement with the opening 27 when the same is arranged upon the outer face of the side 10 as previously set forth. By arranging the sides and ends to be folded as previously set forth, it will be noted that the side 11 will be arranged outermost when the box is folded. Thus one of the bolts 25 may be passed through the opening in the plate 14 and through the openings in the remaining side and ends and threaded into the opening 27 of the plate 26. This will securely lock the parts of the box in a folded position as will be obvious and will effectually prevent movement of any one pair with respect to the remaining. I also find it of advantage to have coacting with the openings 28 and 28′, the pivoted plates or shutters 29 which are adapted to close said openings when the box is in extended or open adjustment, said plates or shutters 29 overlying the inner faces of the ends 7 and 8, the sides 10 and 11, and top 22. It will also be understood that if desired a shutter or plate may be employed in connection with the opening 27.

It is also to be particularly noted that when my improved crate or box is in open or extended adjustment, there is substantially no strain on the various hinges as herein embodied.

From the foregoing description taken in connection with the accompanying drawings, it is thought that the construction, operation and advantages of the improved box will be clearly understood and while I have herein shown and described the specific construction of my invention, I do not wish

to be limited thereto except for such limitations as the claims may import.

I claim:

1. A folding box or crate comprising a bottom, sides and ends hinged thereto for inward swinging movement, a top, lugs carried by the sides, elements carried by the ends, said elements having slots formed therein to receive the lugs, and bolts adapted to be passed through the top and through the lugs after the same have been arranged within the slots for the purpose set forth.

2. A folding box or crate comprising a bottom, sides and ends hinged thereto, an element carried by each of the ends, angular plates carried by each side, lugs carried by said plates, said elements having slots formed therein to receive the lugs, a top, and bolts adapted to be passed through said top and loosely through certain of said lugs after the same have been arranged within the slots and threaded into the remainder of the lugs for the purpose set forth.

3. A folding box or crate comprising a bottom having a transverse threaded opening, sides and ends hinged to said bottom for inward swinging movement, elements secured to the vertical edges of the ends, angular strips secured adjacent the ends of the sides and extending beyond the inner faces thereof, said plates being provided with lugs, the elements being provided with slots to receive the lugs, a top, said top, sides and ends having transverse openings therein to be alined with the threaded opening of the bottom when the said sides, ends and top are arranged in a folded position, and a bolt adapted to be passed through said alined openings of the sides, top and ends and threaded into the opening of the bottom, said bolt being also adapted for engagement with certain of the lugs to retain the ends in a set-up position, substantially as described.

In testimony whereof I hereunto affix my signature in the presence of two witnesses.

JAMES THERIO.

Witnesses:
DAN HALE,
LILLIAN VAN DUSER.

Copies of this patent may be obtained for five cents each, by addressing the "Commissioner of Patents, Washington, D. C."