June 8, 1926. 1,587,855

E. T. REDDING

METAL EXPANDING MACHINE

Filed July 30, 1921 2 Sheets-Sheet 1

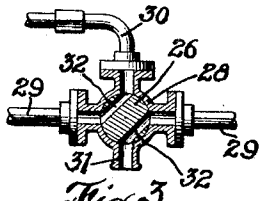

Fig. 3.

Fig. 1.

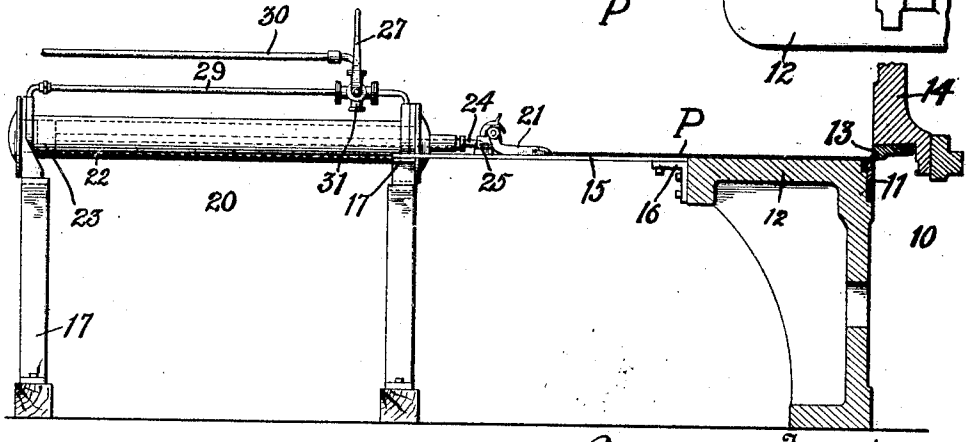

Fig. 2.

Inventor
Edward T. Redding
By his Attorneys
Hynnestvedt & Lechner

June 8, 1926.

E. T. REDDING

1,587,855

METAL EXPANDING MACHINE

Filed July 30, 1921

2 Sheets-Sheet 2

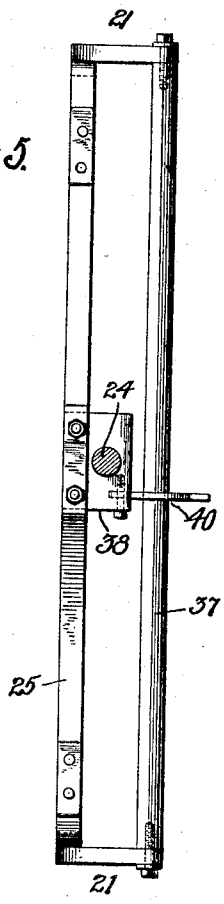

Fig. 5.

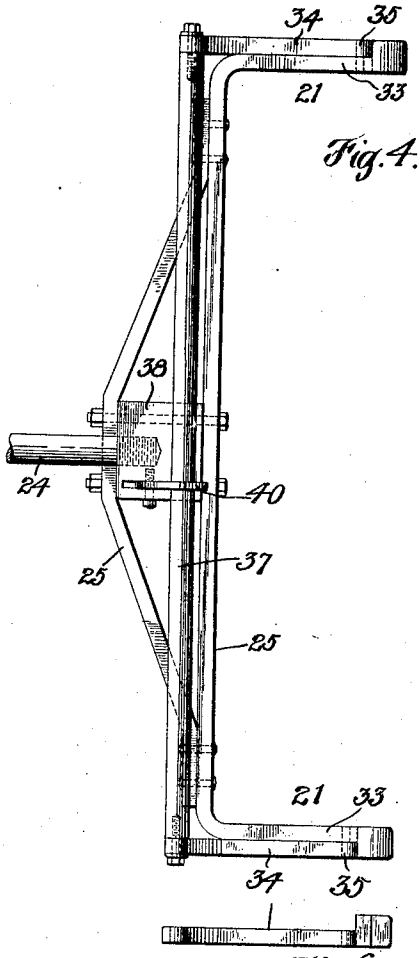

Fig. 4.

Fig. 6.

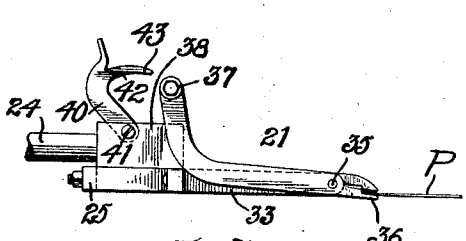

Fig. 7.

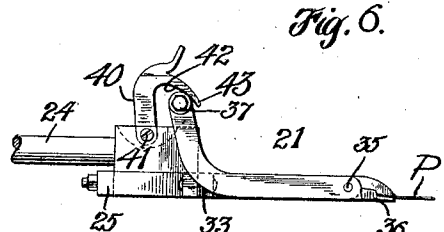

Fig. 8.

Inventor
Edward T. Redding
By his Attorneys
Synnestvedt & Lechner

Patented June 8, 1926. 1,587,855

UNITED STATES PATENT OFFICE.

EDWARD T. REDDING, OF SWISSVALE, PENNSYLVANIA, ASSIGNOR TO CONSOLIDATED EXPANDED METAL COMPANIES, A CORPORATION OF PENNSYLVANIA.

METAL-EXPANDING MACHINE.

Application filed July 30, 1921. Serial No. 488,570.

My invention relates to metal expanding machines and the like such as are used in making expanded metal mesh or lathing, and more especially to the feeding of sheet material to the shearing or expanding mechanism of such machines. I aim to facilitate this feeding in of the material, and to make it more accurate and more readily controlled, and also to minimize the labor required. How these and other advantages can be attained through my invention will appear from my description hereinafter of the best embodiment of the invention at present known to me.

In the drawings, Fig. 1 is a plan view illustrating the feeding of sheet material to a metal shearing and expanding machine in accordance with my invention, only a portion of the machine, comprising the essential parts of its shearing and expanding mechanism, being shown.

Fig. 2 is a corresponding side elevation, certain parts of the machine appearing in section.

Fig. 3 is a fragmentary detail view, on a larger scale, showing a cross-section through the feed control valve and its casing.

Fig. 4 is a plan view of the gripper device shown in Figs. 1 and 2, on a larger scale.

Fig. 5 is a rear view of the gripper device,—i. e., from the left of Fig. 4.

Fig. 6 is a plan view of one of the pincer members of the grippers, detached.

Fig. 7 is a side elevation of the gripper device, open, with a sheet or plate edge between its jaws; and

Fig. 8 is a similar view of the device tightened upon the sheet to grip it securely.

The shearing and expanding machine here illustrated has a shearing and expanding mechanism 10 comprising a fixed shearing edge or knife 11, mounted in the rear corner of a horizontal feed table 12 adjacent said mechanism, and a vertically movable series of shearing knives 13, mounted at the lower front corner of a movable press head 14. At the far side of the table 12 from the mechanism 10 are feed ways 15 adapted to cooperate with the table in supporting the sheet material operated on,—these ways being attached to brackets 16 on the table at their forward ends, and to the supporting framework 17 of the motor feed mechanism 20 at their rear ends. The mechanism 20 is adapted to engage the sheet material P at its rear edge and advance it to the mechanism 10 over the supporting means 15, 12.

The motor feed mechanism 20 comprises a gripping device or set of grippers 21, by means of which the sheet P may be gripped at suitably separated points of its rear edge, and a fluid motor including a pressure cylinder 22 with a double acting piston 23 therein which is connected by a piston-rod 24 to the head or yoke 25 that carries the grippers 21, 21. Motive fluid under pressure is supplied to the cylinder 22 under control of a rotary plug valve 26 with a manual operating lever 27. This valve 26 is mounted in a casing 28 having at opposite sides connections 29, 29 to the opposite ends of the cylinder 22, and having fluid supply and exhaust connections 30, 31 above and beneath. In the valve body 26 are ports 32, 32 so arranged that with the valve in the position shown (Fig. 3), the fluid is admitted to the left-hand end of the cylinder 22 and exhausted from the right-hand end, to advance the plate P across the feed table 12 to the mechanism 10. When the valve 26 is in a position 90° counter-clockwise from the position shown, the admission and exhaust of fluid and the consequent actuation of the grippers 21 is reversed to retract them; while with the valve in a middle position, both ends of the cylinder 22 are cut off from admission and exhaust, so that the piston 23 and the grippers are virtually locked in position by the liquid thus imprisoned.

Referring, now, to Figs. 4 to 8, it will be seen that each of the grippers 21 comprises a fixed pincer member 33 formed by the bent end of one of the yoke bars and a coacting movable pincer member 34 pivoted thereto at 35. The broad, flat gripping jaw of the movable member 34 has a shoulder 36 for engaging the rear edge of the plate P, by way of a stop to assure its occupying a definite position in the jaws. The rear ends of the pincers 34 are rigidly attached to a cross bar 37. On the yoke block 38 (into which the piston rod 24 is screwed fast) a locking hook 40 is pivoted at 41, as a means of securing the grippers 21 fast upon the sheet or plate P. The arc-shaped inner locking edge 42 of this hook 40 gradually diminishes in radius back from its front

end 43, so as to draw the grippers 21 tighter and tighter as it is pushed on over the bar 37. This variation is so relatively slight, however, that the friction of the edge 42 on the bar 37 suffices to hold it fast against slipping off. Since the locking device 40 draws on the transverse members 25, 37 that connect corresponding gripping jaws or pincers 33, 34 of the two sets at an intermediate point in their length, the pincers will effectually grip the sheet P at correspondingly separated points.

It will be seen that the grippers 21 rest directly on the ways 15, which thus serve to support the rear edge of the sheet P during its advance.

The feed mechanism operates simply and effectively and securely holds the sheet during the shearing operations, it being understood in this last regard that the reciprocating member 14 is also shiftable laterally back and forth transversely of the table 12 to shear the half-diamonds from the blank in a manner well understood in this art. By the substitution of this mechanical feed I find that I am enabled to greatly cut down the labor, in which connection it will be seen that in manual operation the pushing forward of the long blank and holding it during shearing present considerable difficulties and are exacting physically.

What I claim is:

1. A motor feed mechanism for a sheet metal shearing and expanding machine comprising a head with separated grippers thereon for grasping the sheet at its following edge; ways for supporting and guiding said grippers; and a motor cylinder with piston connected to said head to advance the sheet to the shearing and expanding mechanism of the machine.

2. A motor feed mechanism for a sheet metal shearing and expanding machine comprising a head carrying suitably separated sets of pivoted gripper members for grasping the sheet at its following edge, transverse members connecting corresponding grippers of the sets; means for drawing said transverse members together at an intermediate point in their length, so as to cause the separated sets of grippers to grasp a sheet at corresponding points; and a motor for actuating one of said transverse members to advance the sheet or retract the grippers.

In testimony whereof, I have hereunto signed my name.

EDWARD T. REDDING.