Oct. 4, 1927. 1,643,996

W. RAYMOND

COOLING WATER CONTROLLING MEANS FOR COMPRESSORS

Filed Oct. 7, 1926

Fig. 1.

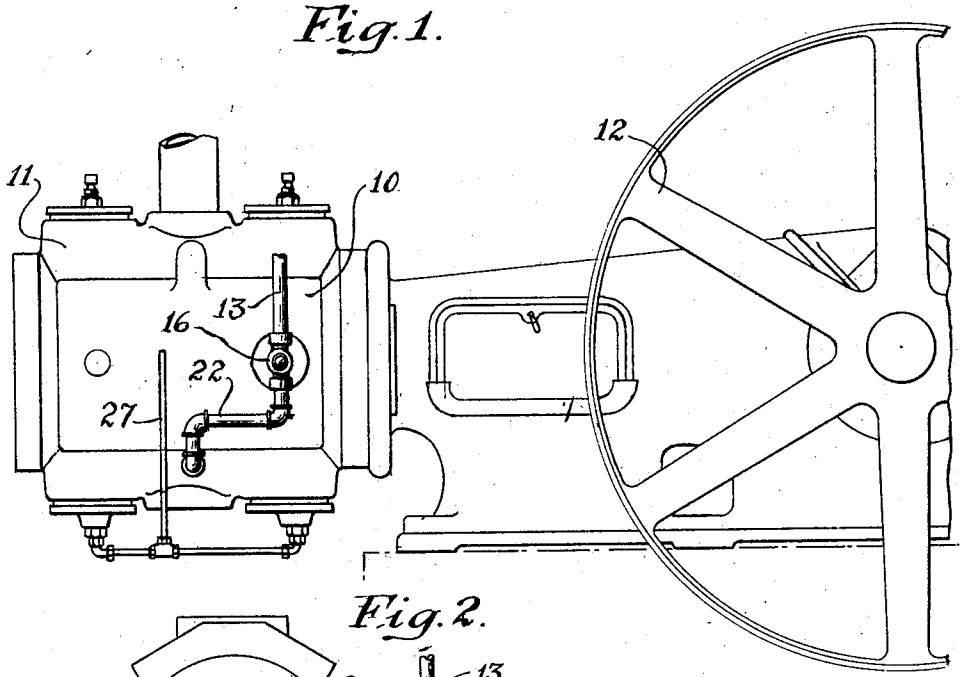

Fig. 2.

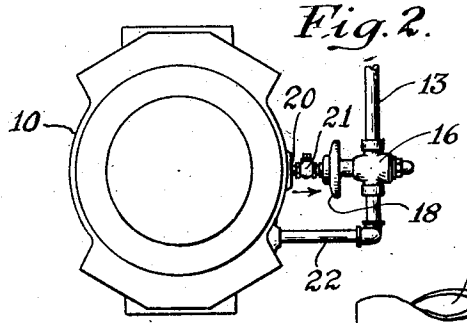

Fig. 3.

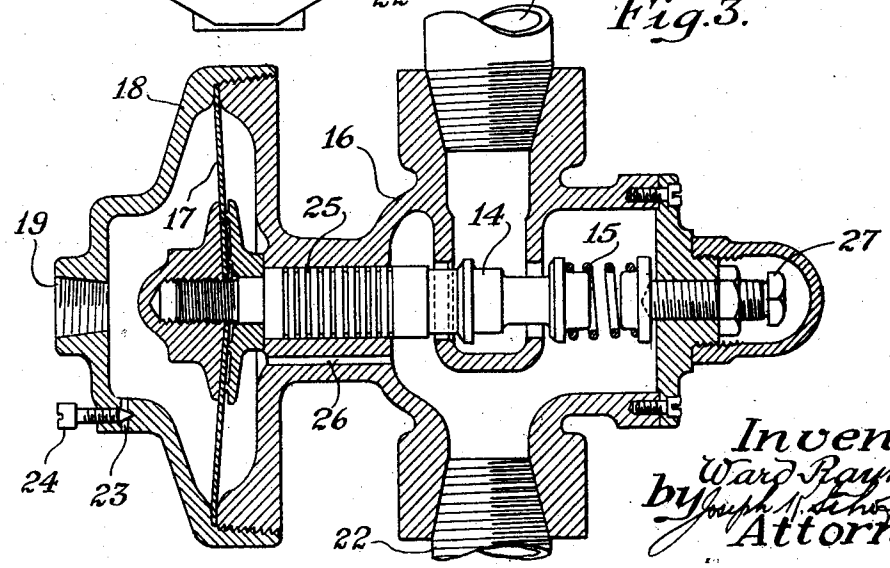

Inventor
Ward Raymond
by Joseph L. Schofield
Attorney

Patented Oct. 4, 1927. 1,643,996

UNITED STATES PATENT OFFICE.

WARD RAYMOND, OF EASTON, PENNSYLVANIA, ASSIGNOR TO PENNSYLVANIA PUMP & COMPRESSOR COMPANY, OF EASTON, PENNSYLVANIA, A CORPORATION OF PENNSYLVANIA.

COOLING-WATER-CONTROLLING MEANS FOR COMPRESSORS.

Application filed October 7, 1926. Serial No. 140,087.

This invention relates to water valves for compressors and in particular to a valve adapted to control the supply of cooling water to the jacket of a compressor.

An object of the present invention is to provide a cooling water supplying means particularly adapted for intermittently operated compressors, so that water may be constantly supplied while the compressor is operating and automatically shut off when the compressor is temporarily inoperative.

Another object of the present invention is to provide a water supply controlling valve operated by the pressure of air or other fluid within the cylinder and adapted to act through a check valve upon a diaphragm movement of which opens and closes the water valve.

Another object of the invention is to operate the water supplying valve by pressure from within the compressor cylinder and supplied to the controlling means through the indicator opening of the compressor cylinder so that no additional opening will be required to be made.

Another object of the invention is to normally hold the water controlling valve closed by spring means so long as no pressure is being built up within the cylinder, the tension of the spring being adjustable.

With these and other objects in view my invention consists in the features of construction and operation set forth in the following specification and illustrated in the accompanying drawings.

In the accompanying drawing annexed hereto and forming a part of this specification, I have shown my invention embodied in a constantly driven compressor adapted to be intermittently loaded and unloaded in accordance with the demands upon the compressor, but it will be understood that the invention can be otherwise embodied and that the drawing is not to be construed as defining or limiting the scope of the invention, the claims appended to this specification being relied upon for that purpose.

In the drawing:

Fig. 1 is a side view of a complete compressor provided with the present invention;

Fig. 2 is an end view of the same, the flywheel and main bearings not being shown; and

Fig. 3 is a cross-sectional view on an enlarged scale through the improved water controlling valve and operating means therefor.

In the above mentioned drawing, I have shown but one embodiment of the invention which is now deemed preferable, but it is to be understood that changes and modifications may be made within the scope of the appended claims without departing from the spirit of the invention.

Briefly, and in its broadest aspect, my invention comprises the following principal parts: First, a compressor cylinder having an opening extending through the cylinder wall into the cylinder adjacent an end thereof; second, a water jacket surrounding the cylinder and adapted to be supplied with cooling water; third, a valve adapted to control the admission of water to the jacket; fourth, a diaphragm suitably mounted adjacent the valve and attached thereto so that movement of the diaphragm will move the valve to its open and shut position; fifth, means to admit fluid being compressed to one side of the diaphragm; sixth, a check valve in said means preventing fluid from returning to the cylinder from the diaphragm; and seventh, a spring normally forcing the diaphragm and valve in one direction.

Referring more in detail to the figures of the drawing I provide a compressor having a cylinder 10 with a jacket 11 surrounding it through which cooling water may be circulated. As the form of cylinder, the water jacket and valve mechanism for the compressor may be of any usual or standard types, it is not thought that these parts will require further description. The invention is designed primarily for compressors adapted to be intermittently loaded and unloaded, but maintained constantly in operation. The compressor may therefore be driven from the flywheel 12 by any convenient constantly operated means.

As above stated, the primary purpose of the invention is to economize cooling water by promptly shutting off the circulation of water when the compressor is unloaded and

no fluid is being compressed within the cylinder 10. Within the conduits 13 for supplying the cooling water a valve 14 is inserted which is maintained open while the compressor is operating to compress fluid and adapted to be closed by a spring 15 as soon as the compressor is unloaded and continues to operate idly. To move the valve 14, which as shown is of the balanced type, within its casing 16 to an open position as shown in Fig. 3, the valve 14 is extended and has fixed thereto a flexible diaphragm 17. The diaphragm 17 is mounted within a casing 18 and is held in place therein at its periphery. As shown in Fig. 3 the casing 18 is formed of two parts threaded together and engages the periphery of the diaphragm 17 between them. At its center the diaphragm 17 is attached to the extended portion of the valve 14.

One side of the diaphragm 17 is subjected to the maximum pressures developed within the compressor cylinder 10 during operation. For this purpose an opening 19 is provided within the casing 18 through which pressure of the compressed fluid may be admitted to one side of the diaphragm 17. Preferably, and as shown in Figs. 1 and 2 of the drawing, the pressure to the diaphragm 17 is supplied from the cylinder 10 through the indicator opening 20. Fitted into this opening which enters the cylinder 10 adjacent one end is a nipple to which is fitted a check valve 21. This check valve may be of any standard or usual form and is positioned to permit fluid to pass in the direction indicated by the arrow in Fig. 2, but is adapted to close against fluid passing in the opposite direction. Directly connected to this check valve 21 by means of a pipe nipple is the casing 18. It will be seen, therefore, from the above description that during normal operation of the compressor the pressure built up within the cylinder 10 will cause fluid to pass through the check valve 21 and press against one side of the diaphragm 17, thus forcing the central portion of the diaphragm 17 in a direction to open the valve 14. With the valve 14 in its open position water may pass from the conduit 13 through the valve casing 16 and into the conduits 22 from which it may enter the jacket 11 of the cylinder 10. As soon as the compressor is unloaded by a usual means, as by supplying receiver pressure to conduit 27 to render the intake valves inoperative, the pressure within the casing 18 may be exhausted through the leak port 23, the opening through which may be varied by the needle valve 24. The valve 14 is then closed by the action of spring 15, thus shutting off the supply of water very promptly.

Preferably, and as shown in Fig. 3, the part extended from the valve 14 is guided within the casing 16 and is formed with a plurality of annular grooves 25 forming oil retaining spaces. Also the casing 16 is provided with a conduit 26 extending between the spaces occupied by the valve 14 and the diaphragm 17 so that there will be no tendency for a pressure to be built up on the side of the diaphragm opposite that to which pressure from the cylinder 10 is admitted. As soon as the compressor is unloaded and pressure is released from against the diaphragm 17 of the valve 14 closes due to the force of the spring 15, thus shutting off the supply of cooling water. To adjust the pressure of spring 15 an adjusting screw 27 is provided. Promptly upon the compressor again operating normally, the pressure at the end of a compressing stroke of the compressor causes the compressed fluid to pass through the opening 20 through the check valve 21 and again move the diaphragm 17 to open the valve 14. Cooling water is therefore supplied to the cylinder jacket at all times during the normal operation of the compressor, but as soon as the compressing operation is stopped, the supply of circulating water is discontinued. As long as no compression of fluid takes place within the cylinder, whether the compressor continues to idle or not, no circulating or cooling water is supplied to the jacket.

I claim as my invention:

1. Water controlling means for compressors comprising in combination a compressor cylinder having an opening through the wall thereof, a check valve connected to the cylinder at said opening, permitting compressed fluid to pass from said cylinder but not enter said cylinder, a valve casing connected directly to said check valve, a valve within said casing, a movable member attached to said valve whereby movement of said movable member moves said valve, and water supplying conduits opened and closed by movement of said valve and movable member.

2. Water controlling means for compressors comprising in combination a cylinder having a water jacket, a water supplying conduit for said jacket, a valve in said conduit, a movable member connected to said valve whereby movement of said movable member will move said valve, means connecting one side of said movable member to the interior of said cylinder adjacent one end whereby fluid pressure within said cylinder may be admitted directly to one side of said movable member, a check valve in said connecting means preventing retrograde movement of fluid, and a spring normally forcing said valve toward its closed position.

3. Water controlling means for compressors comprising in combination a cylinder having a water jacket, a water supplying conduit for said jacket, a valve in said con-

duit, a movable member connected to said valve whereby movement of said movable member will move said valve, means connecting one side of said movable member to the interior of said cylinder adjacent one end whereby fluid pressure within said cylinder may be admitted directly to one side of said movable member, a check valve in said connecting means preventing retrograde movement of fluid, a spring normally forcing said valve toward its closed position, and means to slowly exhaust fluid from said valve casing adjacent said check valve.

In testimony whereof, I hereto affix my signature.

WARD RAYMOND.