Feb. 28, 1961 F. G. CLARK 2,973,421

HEATING MEANS FOR CLOTH DRILLS

Filed May 6, 1959 2 Sheets-Sheet 1

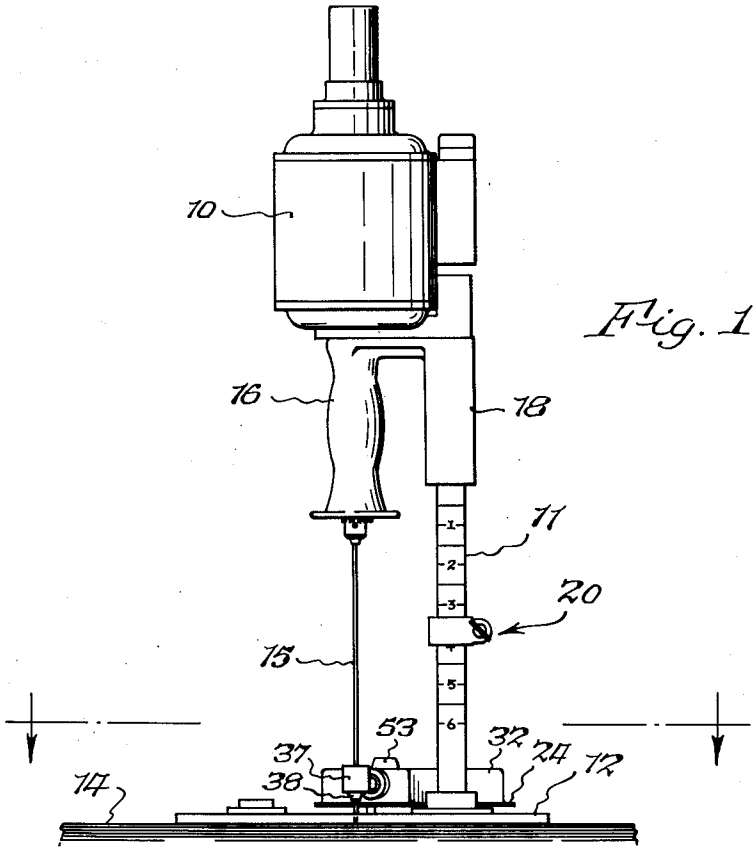

Fig. 1.

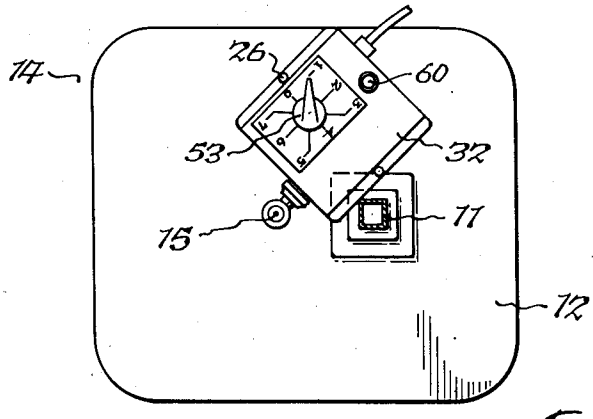

Fig. 2.

INVENTOR
Frederick G. Clark
BY Parker & Prahmon
ATTORNEYS

Feb. 28, 1961 F. G. CLARK 2,973,421

HEATING MEANS FOR CLOTH DRILLS

Filed May 6, 1959 2 Sheets-Sheet 2

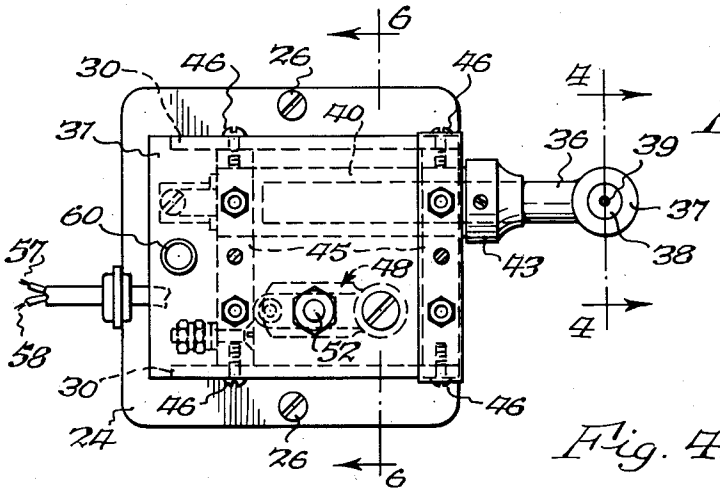

Fig. 3.

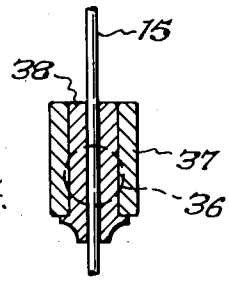

Fig. 4.

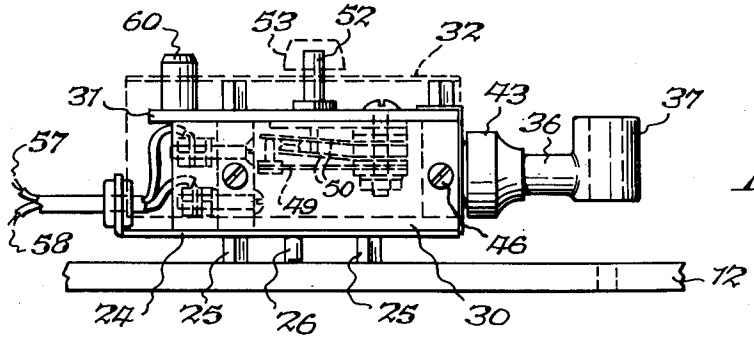

Fig. 5.

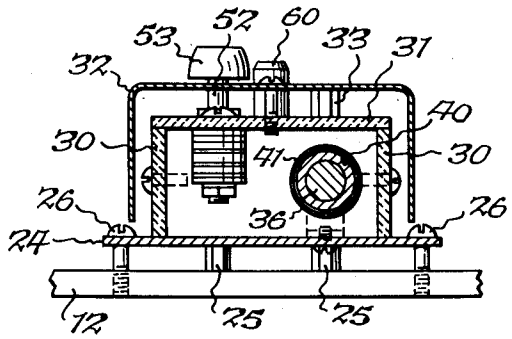

Fig. 6.

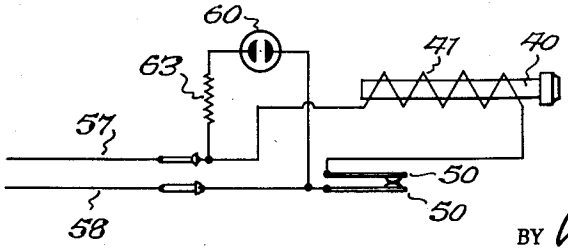

Fig. 7.

INVENTOR

Frederick G. Clark

BY Parker & Prochnow

ATTORNEY

United States Patent Office 2,973,421
Patented Feb. 28, 1961

2,973,421

HEATING MEANS FOR CLOTH DRILLS

Frederick G. Clark, Buffalo, N.Y., assignor to Eastman Machine Company, Buffalo, N.Y.

Filed May 6, 1959, Ser. No. 811,442

4 Claims. (Cl. 219—19)

This invention relates to improvements in cloth drills and particularly to means for heating the fabric penetrating needle of the cloth drill in order to produce holes in the material being drilled which will be more clearly visible when the layers of the material are separated.

Cloth drills for providing holes in a lay of cloth to indicate the location of pockets, buttonholes, seams, notches and the like in the several sheets of the lay have been commonly used, the drill generally consisting of an electric motor driving a boring needle for penetrating the layers or piles of cloth or other sheet material. With many types of material the hole drilled in this manner will be clearly visible after the layers of material have been separated, but certain, loosely woven fabrics have a tendency to close the hole after it has been formed. It has been found however that if a hot drill is used for forming these holes, the holes will remain open so as to be clearly visible when the layers of material are separated.

It is one of the objects of this invention to provide a cloth drill with improved means for heating the boring needle or drill bit.

It is also an object to provide a heating device of this type which can be applied to cloth drills as heretofore constructed and which avoids as much as possible obstructing the operator's view of the material to be drilled or the pattern.

In the accompanying drawings:

Fig. 1 is an elevation of a cloth drill provided with heating means embodying this invention.

Fig. 2 is a sectional plan view thereof on line 2—2, Fig. 1.

Fig. 3 is a top plan view of my improved heating device with the cover thereof removed.

Fig. 4 is a sectional elevation thereof on line 4—4, Fig. 3.

Fig. 5 is a side elevation thereof.

Fig. 6 is a transverse, sectional elevation thereof on line 6—6, Fig. 3.

Fig. 7 is a diagrammatic view of an electrical circuit which may be used in connection with my improved heating means.

A cloth drill is shown in the accompanying drawings merely to illustrate the use of my improved heating device and does not of itself constitute a part of this invention. The drill shown includes an electric motor **10** mounted on a standard or column extending upwardly from a base **12** which may be placed on top of the stack or lay of material, such as indicated at **14**, Fig. 1. The motor drives a boring needle **15** suitably connected with the armature of the motor. The drill is also provided with a handle **16** by means of which the drill may be moved about and by means of which the needle may be forced into the material. The motor **10** is mounted in fixed position on the standard **11**. The motor is provided with a hollow shaft having a key, and a spindle with a keyway is arranged to slide vertically within the hollow shaft. The needle **15** is suitably coupled to the

spindle and consequently may move up and down relatively to the motor. The lower end of the spindle is mounted against lengthwise movement in a ball bearing that is journalled in the handle, so that by moving the handle up and down, similar motion is imparted to the needle while the motor remains stationary. The handle is connected with the tube or sleeve **18** which is slidable along the standard **11** while the needle is being forced through the material by downward pressure on the handle **16**. The standard **11** may be provided with any desired clamping member **20** thereon which may be adjusted vertically on the standard to limit the extent of downward movement of the needle and consequently the depth to which the needle may be moved downwardly below the supporting base **12**. My improved heating device may, however, be used with cloth drills of other suitable constructions.

This heater may be suitably supported on the base **12** of the drill and includes a housing in which a heating element together with control means for the same is arranged. This housing, as shown by way of example in the drawings, includes a base plate **24** mounted in spaced relation to the base **12** of the drill, for example by downwardly extending projections or feet **25**, and the base plate **24** is preferably secured in fixed relation to the base of the drill in any suitable manner, for example, by means of screws **26** passing through holes in the base plate **24** and into threaded holes in the base **12** of the drill. Any other means for securing the housing or container of the heating element in spaced relation to the drill may be employed.

The housing for the heating element also includes side walls **30** and a top wall **31** which are preferably made of a suitable heat insulating material, and a removable cover member **32** is mounted in spaced relation to the top plate **31** of the housing by means of posts or other spacing members **33**.

The heating of the needle is preferably effected by means of a heat-conducting arm **36** terminating at its outer end in a substantially vertical, cylindrical member **37** having an aperture therein formed to receive a bushing **38** having a central aperture **39** through which the boring needle **15** may pass. The other end of the heat-conducting arm **36** extends into the housing of the heating element and into proximity to a heating element **40** arranged in the housing. This heating element may be of any suitable construction, that shown being of tubular form including a metal sleeve or bushing **40** into which the heating arm **36** fits. On the exterior of this sleeve is wound a heating wire **41** to heat the bushing **40** and thus in turn heat the arm **36**. The heating element may have a part **43** on the exterior of the housing to which the heating arm **36** may be secured in correct relation to the needle **15**. Consequently, when the heating element becomes heated by the electrical heating conductors surrounding the metal sleeve **40**, the heat will be rapidly conducted to the heating arm **36** which is preferably made of a material such as copper which readily conducts heat. The heat is conducted to the cylindrical part **37** of the arm and thence to the bushing **38** through which the needle extends. It is, of course, most important that the lower end portion of the needle be heated since this part extends downwardly throughout the lay of material to the bottom thereof. During the greater portion of the time that an operator works with the drill, the needle will be in its uppermost or inoperative position in which the penetrating end of the needle is in close proximity to the bushing **38** of the heating arm.

The heating element may be supported within the housing in any suitable manner, such for example as by end walls or supporting members **45** extending transversely with reference to the heating element and held in

place on the housing by screws **46** or the like. The flow of electric current to the heating element may be controlled by means of a thermostat **48** of any suitable construction, that shown including a bimetallic member **49**, Fig. 5, which controls the flow of current through a pair of switch members **50**, one of which is movable relatively to the other to make and break a circuit. The operation of the thermostat may be controlled by means of an adjustable controlling member **52** adjustable by means of a knob **53** arranged on the exterior of the housing above the cover **32**. This thermostat and the control device are also of well known construction and consequently need not be herein described in detail. The thermostatic device however is positioned in a desired spaced relation to the heating element **41** so that heat from the heating element is transmitted to the thermostatic element through air within the heat insulating housing of the control device. By thus positioning the thermostatic element at a distance relatively to the heating element, there will be a delay in the action of the thermostatic element which will correspond approximately to the delay resulting from the transfer of heat through the arm **36**, cylindrical part **37** and bushing **38** to the needle.

Heating current is supplied to the heating element through a pair of conductors **57** and **58** and a pilot light **60** is preferably included in the circuit to show the operator whether the supply of current to the heating device is "on" or "off."

The electrical circuits of the heating device are diagrammatically shown in Fig. 7, in which the current from the conductor **58** goes to the contacts **50** controlled by the thermostatic element and when the contacts are in engagement, current passes from one of these contacts to the heating coil **41** extending about the sleeve **40** into which the arm **36** extends. The pilot light **60** is connected across the line through a limiting resistor **63**.

The construction described has the advantages that it can be easily applied to a cloth drilling machine and by arranging the heating element on the base of the drill at a side of the needle and by conducting the heat to the needle through an arm of relatively small dimensions, the heating device interferes to the minimum extent with the ability of the user to see the pattern according to which holes are to be drilled into the fabric or other material.

It will be understood that various changes in the details, materials and arrangements of parts, which have been herein described and illustrated in order to explain the nature of the invention, may be made by those skilled in the art, within the principle and scope of the invention, as expressed in the appended claims.

I claim:

1. A heating device for a cloth drill having a rotary cloth penetrating needle and a base through and below which the needle passes, said heating device including a heating element mounted on said base in spaced relation to said needle, and an arm of heat conducting material having one end portion thereof arranged in position to be heated by said heating element and having the other end thereof provided with an aperture through which the needle extends to conduct heat from said heating element to said needle when the needle is in retarded non-operating position.

2. A heating device for a cloth drill having a rotary cloth penetrating needle and a base through and below which the needle passes, said heating device including a heating element mounted on said base in spaced relation to said needle, an arm of heat conducting material having one end portion thereof arranged in position to be heated by said heating element and having the other end thereof extending in close proximity to said needle to conduct heat from said heating element to said needle, and a housing of heat insulating material arranged about said heating element and out of which said arm extends to said needle.

3. A heating device for a cloth drill having a rotary cloth penetrating needle and a base through and below which the needle passes, said heating device including a heating element mounted in spaced relation to said needle, and an arm of heat conducting material having one end portion thereof arranged in position to be heated by said heating element and having the other end thereof provided with an aperture through which the needle extends to conduct heat from said heating element to said needle, said heating element including electrical conductors arranged to supply heat to said arm, and a thermostatic device for controlling the temperature of said arm by controlling the amount of electricity passing to said heating element, said thermostatic device being arranged in spaced relation to said heating element and separated therefrom by an air gap to delay the action of said thermostat in accordance with the delay in the transmission of heat from said heating element to said needle.

4. A heating device for a cloth drill having a rotary cloth penetrating needle and a base through and below which the needle passes, an arm of heat conducting material having an aperture through which said needle extends, an electric heating element arranged in spaced relation to said needle for heating said arm, said heating element including a cylindrical member of heat conducting material extending about said arm, and a heating coil wound about said cylindrical member for heating the same.

References Cited in the file of this patent

UNITED STATES PATENTS

2,374,706	Saslaw	May 1, 1945
2,526,888	Marik	Oct. 24, 1950
2,558,354	Gottscho	June 26, 1951
2,580,092	Herbert et al.	Dec. 25, 1951
2,620,428	De Green	Dec. 2, 1952
2,727,128	Jaye	Dec. 13, 1955