June 23, 1959 A. L. W. WILLIAMS ET AL 2,892,107

CELLULAR CERAMIC ELECTROMECHANICAL TRANSDUCERS

Original Filed Dec. 21, 1953 2 Sheets-Sheet 1

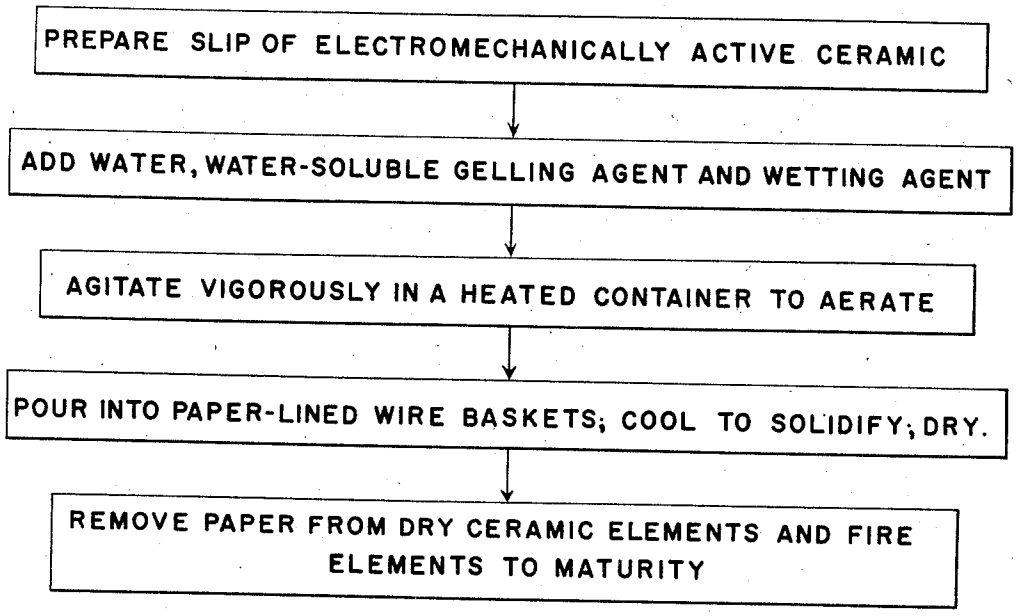

FIG. 1a

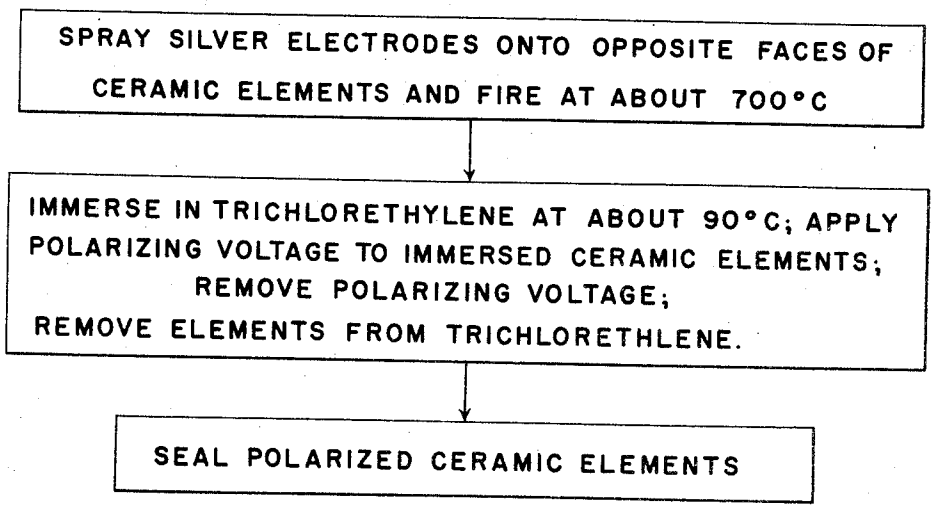

FIG. 1b

INVENTOR
A.L.W. WILLIAMS
CHARLES K. GRAVLEY
BY
Francis R. Masselle
ATTORNEY

June 23, 1959 A. L. W. WILLIAMS ET AL 2,892,107

CELLULAR CERAMIC ELECTROMECHANICAL TRANSDUCERS

Original Filed Dec. 21, 1953

2 Sheets-Sheet 2

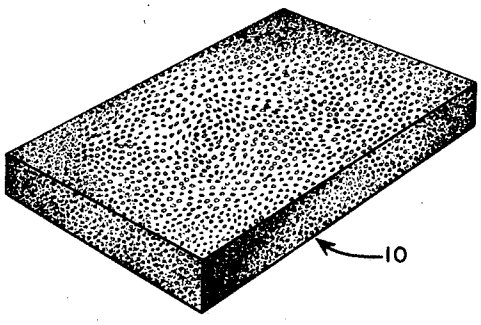

FIG. 2

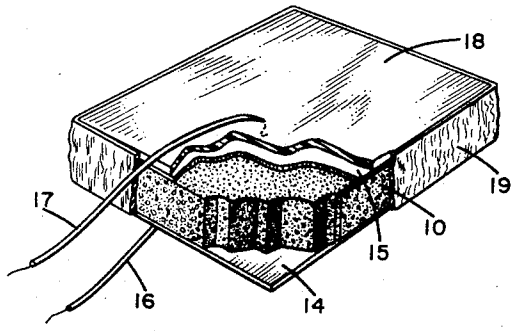

FIG. 3

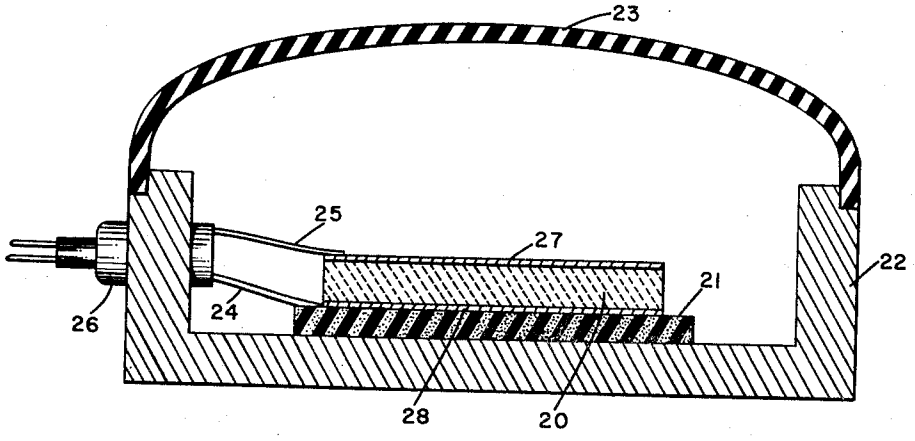

FIG. 4

INVENTOR
A. L. W. WILLIAMS
CHARLES K. GRAVLEY
BY Francis H. Masselle
ATTORNEY

United States Patent Office 2,892,107 Patented June 23, 1959

2,892,107

CELLULAR CERAMIC ELECTROMECHANICAL TRANSDUCERS

Alfred L. W. Williams, Cleveland, and Charles K. Gravley, Willoughby, Ohio, assignors to Clevite Corporation, Cleveland, Ohio, a corporation of Ohio

Continuation of abandoned application Serial No. 399,282, December 21, 1953. This application July 25, 1957, Serial No. 674,205

8 Claims. (Cl. 310—8.0)

This invention relates to electromechanical transducers, transducer materials and elements.

The term "piezoelectric" is used herein as meaning and synonymous to, "electromechanically responsive," i.e., capable of converting applied electrical energy to mechanical energy or applied mechanical energy to electrical energy. In other words, these terms are employed herein without distinction as to whether the conversion (or response) is linear or non-linear.

The present invention is concerned primarily with the improvement of piezoelectric elements, i.e., electromechanical transducers, composed of electromechanically responsive ferroelectric polycrystalline ceramic materials which are capable of accepting and retaining electrostatic polarization. Examples of such transducers are disclosed in United States Letters Patent No. 2,486,560 to R. B. Gray and No. 2,708,244 to B. Jaffe.

The aforementioned patent to Gray discloses transducer elements formed of barium titanate ceramics while the Jaffe patent relates to transducers composed of ceramic solid solutions of lead zirconate and lead titanate. These two are, most likely, the best and most widely used ferroelectric, polycrystalline ceramic transducer materials known at the present time and will be used as illustrative examples in describing the present invention; however, it will be appreciated as this description proceeds that the basic inventive principles disclosed can be applied to any of the presently known or henceforce discovered electromechanically responsive materials which lend themselves to the performance of the method steps of the invention. Insofar as is known, only monocrystalline piezoelectric materials such as quartz, Rochelle salt, ammonium dihydrogen phosphate, tourmaline and the like would not be satisfactory.

A particularly important aspect of the present invention is in connection with underwater electroacoustic transducers, in which electrical energy applied to the transducer causes it to radiate acoustic energy into the water or an acoustic signal transmitted through the water actuates the transducer to produce an electrical response.

It is well known that a prime requisite of underwater electroacoustic transducers for efficient operation is a good impedance match of the transducer with water. This applies also to ultrasonic transducers, such as are used for cleaning, sonic irridation, etc., which operate in fluid transmission mediums other than water.

The impedance matching of transducers to transmission mediums has long been a serious problem in the art. Many of the piezoelectric transducing materials and elements heretofore available have a characteristic density and mechanical compliance—and, therefore, a fixed acoustic impedance. This acoustic impedance usually is much higher than that of water or the other transmission fluid involved. This is particularly true of the polycrystalline ferroelectric ceramics. For example, the normal specific acoustic impedances of lead zirconate titanate and barium titanate ceramics are in the range from about 20 to 30×10^6 (kg./m.^{3}) (m./sec.) as compared

to 1.5×10^6 for water. Some monocrystalline transducer materials, e.g., ammonium dihydrogen phosphate ($NH_4H_2PO_4$) have relatively low acoustic impedance which are a comparatively good match to water but these materials suffer from other disadvantages: they are limited in size and, therefore, are not suitable for low frequency resonant operation unless mass-loading is resorted to; they are relatively more expensive to produce than polycrystalline materials and are not susceptible of being formed and shaped by ceramic techniques; and, for generating highly directional signals, large heavy arrays of monocrystalline elements must be used because of their individual size limitations.

Due to the inherent shortcomings of monocrystalline transducer materials and elements, the trend in recent years has been toward polycrystalline materials such as the ferroelectric ceramics mentioned hereinabove. Heretofore, the problem of impedance matching thus encountered has been attacked by resort to various impedance transformation means. Such impedance matching expedients, however, obviously are undesirable in that they add weight, bulk, complexity and cost to the transducer.

These difficulties and problems are overcome by the present invention which contemplates an electromechanical transducer comprising a macroscopically porous or spongoid body of electromechanically responsive ferroelectric ceramic material. Due to the fact that the ceramic material is macroscopically porous, its density is less and its compliance greater than conventional material; thus it has a lower characteristic impedance which is a much better match to water and most other common transmission mediums.

It is a general object of the invention to provide electromechanical transducers, transducer elements, and materials which overcome at least one of the problems of the prior art.

It is another general object of the invention to provide a novel ferroelectric ceramic element of low density which is capable of a substantial electromechanical response.

Still another object of the invention is the provision of a novel transducer element capable of satisfying the practical requirements for underwater transducer operation.

A further object of the invention is the provision of an electromechanical transducer element of spongiform ferroelectric ceramic material which, because of its porous structure, has a reduced mechanical characteristic impedance, which has a reduced elastic coupling between its parallel and lateral modes, and which is capable of an effective electromechanical response over a wider frequency bandwidth.

A further object of the present invention is to provide more readily machinable ferroelectric ceramic material adapted for use in electromechanical transducers.

A still further object of the present invention is to provide a novel transducer element of ferroelectric ceramic material which has improved piezoelectric activity in its parallel mode, as compared with prior art elements of this general type.

Further objects and advantages of the invention as well as the specific details of construction and mode of operation of the transducer element and the preferred manner of making it will be apparent from the following description taken in conjunction with the subjoined claims and annexed drawings, in which,

Figure 1(*a*) is a flow diagram of the preferred process of making cellular ceramic transducer materials and elements in accordance with the present invention;

Figure 1(*b*) is a flow diagram of further process steps for completing the fabrication of transducers according to one embodiment of the invention;

Figure 2 is a perspective view of a cellular ceramic element produced in accordance with the steps in Fig. 1(*a*);

Figure 3 is a perspective view of a finished cellular ceramic element produced in accordance with the process diagrammed in Figs. 1(*a*) and 1(*b*); and

Figure 4 is a longitudinal section through an electro-acoustic transducer for underwater operation which incorporates a ceramic piezoelectric element according to the present invention.

The method for manufacturing the transducers contemplated by the present invention comprises two phases: (1) the fabrication of the ceramic body or material and (2) the completion of the transducer.

The flow diagram in Figure 1(*a*) illustrates broadly the steps involved in the first phase of the method. Thus, a slip is prepared of the raw ingredients or precursors of a polarizable ferroelectric ceramic. To this slip is added water, a gelling agent and a wetting agent. The slip is beaten with a food mixer in a heated container to aerate it and then pored into paper-lined molds to cool, solidify and dry. The dried elements are removed from the molds and fired to ceramic maturity.

The following examples illustrate the application of the invention to specific ferroelectric ceramics, viz., barium titanate and lead zirconate titanate.

Example I

In practicing the method outlined in Figure 1(*a*) with barium titanate, the first step is to prepare a slip containing, on a weight basis, barium titanate powder, about 20% or more water, 1½ P.V.A. 70–05 (polyvinyl alcohol) (another water-soluble binder such as gelatin could also be used), and 1% Marasperse C.B. (a dispersing agent which is a sodium salt of ligno-sulfonic acid). To this standard $BaTiO_3$ slip is added water, Igapal (a wetting agent), 2% triethanolamine (added primarily for the purposes of promoting dispersion and plasticizing the binder so that the resultant elements dry without cracking), and enough of the water-soluble gelling agents ammonium pentaborate and Congo red that the resultant elements are stiff at room temperature.

This mixture is a relatively thick gel at this point and is put into a container and heated to a temperature of about 55° C. After heating it converts to a somewhat viscous liquid. The heated liquid mixture then is vigorously agitated to entrain bubbles of air or other ambient gaseous medium. The aeration may be accomplished conveniently by whipping the mixture with a conventional motor-driven food mixer, such as a "Sunbeam Mixmaster." Sufficient aeration usually requires whipping for eight minutes or more. Use of this method of agitation gives satisfactory results with the entrained gas bubbles dispersed more or less uniformly throughout the mixture. It is pointed out that, in most cases, the whipping would be carried out in an ordinary atmosphere; however, this could be done in an enclosure filled with some other gas and it is to be understood that the terms "aerated," "air bubbles," and the like are used loosely throughout this description and the appended claims are intended to encompass gases other than air.

The density of the finished $BaTiO_3$ elements produced by the process is determined by the amount of water in the $BaTiO_3$ mixture, the amount of wetting agent therein, and its temperature during the beating operation.

After being aerated in the manner just described, the foamed $BaTiO_3$ dispersion is poured into paper-lined, open mesh wire baskets, where the $BaTiO_3$ is cooled down to room temperature so that it solidifies. Then it is dried thoroughly, which may take from one to three days at room temperature and ordinary atmospheric conditions. After having been dried, the $BaTiO_3$ elements, throughout their bulk, have macroscopic pores, interstices or crevices formed by air bubbles; these elements have a bulk density of the order of one-fourth of the theoretical density of barium titanate or the maximum density obtainable as a practical matter in fired barium titanate ceramic.

The paper is removed from the dried $BaTiO_3$ elements and these elements are then fired to maturity in substantially the standard manner of conventional dense $BaTiO_3$ elements, except that in the present process the firing is carried on at a temperature from about 50° C. to 80° C. higher than for firing the ordinary dense $BaTiO_3$ elements. Accordingly, therefore, in this firing step a temperature within the range from about 1380° C. to 1450° C. is maintained.

Example II

In a manner very similar to that described in Example I, the method was applied to lead titanate zirconate having the formula $Pb_{.94}Sr_{.06}(Ti_{0.53}Zr_{0.47})O_3$. The composition of a suitable slip of lead zirconate titanate is as follows:

$Pb(Zr,Ti)O_3$ powder	grams	9050
Marasperse	do	140
NH_4OH (Conc. sol.)	cc	40
Water	cc	1600

To 3000 grams of the above slip is added:

P.V.A. 71–30 (10% so.)	grams	200
Congo red	do	2
Igapal	cc	5
Water	cc	300

The mixture is treated in accordance with the method steps described in Example I. However, the firing temperature is adjusted to the material and for lead zirconate titanate ceramic is about 1250–1300° C.

Referring now to Figure 1(*b*), after firing the ceramic elements to maturity, they are machined to size by sanding or sawing, and then are electroded by spraying silver paint onto the opposite major faces of the elements. Preferably the spray is directed at an acute angle to these faces so that the electrode material does not penetrate substantially into the interstices of the elements beyond the outer faces thereof. The electrode paint is then fired onto the elements at about 700° C. in the usual manner commonly practiced with dense ceramic elements.

Following the electroding operation, the elements are immersed in trichlorethylene at a temperature of about 90° to 100° C. and a relatively high D.C. polarizing voltage applied across electrodes, for example, 15 kv. per inch of thickness.

Finally, foil electrodes having lead-in conductors connected thereto are secured to the electroded faces of the ceramic element and the element is sealed against moisture by applying a thermosetting resin to its exposed edges, as well as to the foil electrodes, if desired.

The transducer element produced by the foregoing process is of spongiform structure throughout containing separate macroscopic interstices or crevices filled with air (or other gaseous medium). Because of its cellulated, sponge-like construction the transducer element has a bulk density which is much lower than the density of barium titanate. Depending upon the amount of water added before stirring and the temperature during stirring, spongoid barium titanate may have a density within the range from about 0.5 to 3.0, with 1.4 being a typical value, as compared with a density of about 5.7 for solid barium titanate ceramic. Spongoid lead zirconate titanate material may have a bulk density within the range from about 1.0 to 4.5 with 2.5 being a typical value, as compared with a density of about 7.5 for solid lead titanate zirconate ceramic. Because of the lower density of the spongoid ceramic materials, and because of the higher compliance of the elements due to their cellulated structure, the mechanical (acoustic) characteristic impedance of the spongoid ceramic elements is much lower than for dense ceramic elements, this mechanical impedance being equal to $\sqrt{\text{density}/\text{compliance}}$. As a result, the spongoid elements have a good impedance match with water, which

makes them very good transducer elements for underwater operation.

The spongiform transducer elements of the present invention have been found to operate effectively over a much wider frequency band width around resonance than has been possible with transducers employing dense ceramic elements. Consequently, the transducer elements of the present invention are capable of a rapid response to signals which start and end abruptly. Thus, transducers incorporating such elements are particularly well adapted for echo-ranging using pulse techniques, and other applications where a short time constant is vital.

In addition, the cellular ceramic material of the present invention has been found to be considerably easier to machine into a transducer element of the desired configuration, such as by cutting with a hack-saw or sanding, than is the dense piezoelectric ceramic.

The following table represents a comparison of data on typical samples of dense, substantially pure, permanently polarized barium titanate and a modified form of lead zirconate titanate with representative samples of the same materials produced in accordance with the above-described process:

	$BaTiO_3$		$Pb,Sr(Zr,Ti)O_3$*	
	Porous	Dense	Porous	Dense
K	300	1,700	200	1,100
Y^E ($\times 10^9$)	8	110	5.0	63
d_{33} ($\times 10^{-12}$)	185	190	230	235
g_{33}	50–70	12.6	130	24
d_{31}	20	75	26	97
Density (gms./cc.)	1.3	5.7	2.5	7.5
k_{33}	.33	.46	.37	.63
Frequency Constant (parallel mode)	1,150	2,600	745	1,970

*$Pb_{0.94}Sr_{0.06}(Zr_{0.53}Ti_{0.47})O_3$.

In the foregoing table: K is the relative dielectric constant or permittivity with respect to the absolute dielectric constant of free space; Y^E is the short-circuited Young's modulus in the parallel direction, a ratio of stress to strain, expressed in newtons per square meter; d_{33} is the piezoelectric coefficient relating the parallel strain to the applied electric field, expressed in meters per volt; d_{31} is the corresponding piezoelectric coefficient in the lateral mode; g_{33} is the piezoelectric coefficient, expressed in volt millimeters per newton, which indicates the open circuit electric field strength of the ceramic element for a given mechanical stress in the parallel mode; k_{33} is the coefficient of electromechanical coupling in the parallel mode, which is defined as the ratio of the square root of the mechanical output to the square root of the electrical input; and the frequency constant, expressed in kilocycle millimeters, indicates the resonant frequency in kilocycles for a ceramic element 1 mm. thick, this resonant frequency varying inversely with the thickness of the element. The parallel, or 33, mode refers to mechanical strain in the same direction as the electric field applied to the ceramic element; in the case of an electroacoustic transducer element of the expander type, it relates to the acoustic radiation from either electroded face of the element. The lateral, or 31, mode refers to mechanical strain perpendicular to the applied electric field; in an electroacoustic transducer element of the expander type, it relates to acoustic radiation from any of the non-electroded faces of a rectangular element.

It will be apparent to those skilled in the art to which this invention pertains that the present transducer element has a reduced elastic cross coupling, as a consequence of its cellular structure.

From a comparison of the d_{31} coefficients for the respective ceramics in the above table it will be apparent that there is comparatively little direct piezoelectric excitation of lateral mode in the cellular sponge-like ceramic of the present invention. For this reason, when the porous ceramic is operated in the 33 (parallel) mode, radiating acoustic energy from only one electroded face, there is relatively little energy radiated from the element transverse to this direction. Accordingly, the radiated acoustic energy is highly directive and by proper design a substantially single lobe pattern may be obtained, which is particularly desirable in certain underwater applications. In the past, because of the relatively high elastic cross coupling in dense ceramic elements, it was not possible to operate such elements in the 33 mode where directivity was an important consideration, except by providing a number of elements of that type each elongated in the parallel mode direction and each having a relatively small radiating face area and arranged in mosaic arrays which were difficult and expensive to construct for operation in the desired manner. With the cellular ceramic element of the present invention, by proper design good directivity may be obtained with an electroacoustic transduced employing a single ceramic element having a relatively large radiating face area which radiates energy in the 33, or parallel mode. A further important consideration worth noting is that any ceramic element used for electromechanical transducer purposes has optimum efficiency when operated in its 33 mode; that is, for a given electrical energy input maximum mechanical output is obtained by operating in this mode. Thus, in the present invention, a ceramic transducer element of simple and inexpensive configuration may be operated in its most efficient mode (the 33 mode), without resulting in lack of directivity or substantial interference between the parallel and lateral modes.

Figure 2 illustrates an unelectroded, cellular ferroelectric ceramic element **10** produced by the first five steps of the process described in detail above and outlined in Fig. 1. This element is here shown as rectangular in configuration and in a typical instance may be about 4 inches long, by 2 inches wide by about ½ inch thick. As indicated in the drawing, the element is of cellular construction, having separated macroscopic air holes or interstices throughout.

Figure 3 illustrates this cellular ceramic element after it has been electroded and sealed in accordance with the concluding steps in the described process. The interstices throughout the porous ceramic body are filled with air. The opposite major faces of the element are coated with sprayed-on silver paint against which are secured the foil electrodes **14** and **15**, which may be of brass, or gold-coated silver, or other suitable material. The lead-in conductors **16** and **17** have intimate contact with the respective foil electrodes. It is intended to radiate acoustic energy from the major face on the body contacted by electrode **14**, but not from the other major face at which electrode **15** is located. A coating **18** of suitable plastic is applied to the outer face of foil electrode **15**. Actually there is a thin layer of air between this electrode **15** and the plastic coating and the net effect of this arrangement is to decouple this foil electrode **15** from the surrounding medium, so that no acoustic energy is radiated from this major face of the ceramic element. This, of course, does not interfere with the acoustic radiation from the face on the ceramic element contacted by electrode **14**. The moisture-proofing of the ceramic transducer element is completed by sealing its edges with a thermosetting resin **19**.

In Figure 4, there is shown an underwater transducer employing a transducer element generally similar to that shown in Fig. 3. The ceramic element **20** is identical in all respects to that of Fig. 3, except that the plastic coating on the one electroded face is omitted. Instead, this face, which is contacted by a foil electrode **28**, is mounted on a sponge rubber pad **21**, which is full of air holes which act effectively to decouple this face of the ceramic element. The other major face on the ceramic body **20** is contacted by a foil electrode **27**, and it is intended to radiate acoustic energy from this face. The mounting

pad **21** is mounted on an open-ended housing base **22** across whose open end there extends a rubber cap **23**. The interior of the housing is filled with oil. The lead-in conductors **24**, **25** for the electrodes on the opposite faces of the ceramic element extend into the housing through a fluid-tight seal **26**.

In the operation of the transducer for transmitting acoustic energy, a voltage of a predetermined frequency is applied across the electrodes **27**, **28** on the ceramic element **20**, causing acoustic energy to be radiated from the electroded face at **27** of the ceramic element. This acoustic energy is transmitted through the oil and the rubber cap **23** into the water with very little energy loss therein since both the oil and rubber have a very good impedance match with water.

Conversely, if the transducer is operated as a receiver, then acoustic energy transmitted through the water passes through the rubber cap **23** and the oil in the housing and impinges upon the electroded face at **27** on the ceramic element **20**, causing the latter to produce a voltage across the electrodes **27**, **28** which is representative of the acoustic signal received.

In the foregoing description, the material of which the transducer element is composed has been specified as being substantially pure polycrystalline barium titanate or lead zirconate titanate. However, it is to be understood that within the purview of the present invention, transducer elements may be fabricated of other ferroelectric ceramic materials which, when polarized, have a substantial electromechanical response, particularly a piezoelectric response. By the term "polarized," as used herein is meant either permanently polarized or else subjected to a temporary polarizing voltage at the time it is operated so as to render it capable of an electromechanical response, particularly a piezoelectric response. As an example of other suitable ceramic material, the ceramic may consist of a mixture of barium titanate and a small percentage (such as 2% to 3½%) of zirconia (ZrO_2), or barium titanate and a small percentage of barium zirconate ($BaZrO_3$) as disclosed and claimed in U.S. Patent No. 2,708,243 to E. J. Brajer. Alternatively, other mixtures of barium titanate, or piezoelectric ceramic materials other than barium titanate, may be used. Additional examples of suitable materials are given in copending applications Serial No. 527,720 filed August 11, 1955, and Serial Nos. 550,868 and 550,869 filed December 5, 1955.

Insofar as the transducer element itself is concerned, without departing from the purview of this invention it may be made by processes other than that described herein, so long as it has the low density, cellular structure which renders it capable of accomplishing the purposes of this invention.

Therefore, while there have been disclosed in the foregoing description a specific presently preferred manner of practicing the process of the present invention and a specific preferred embodiment of the ceramic transducer element itself, it is to be understood that various modifications, omissions and refinements which depart from the disclosed embodiments of the process and product of the present invention may be adopted without departing from the spirit and scope of this invention.

This application is a continuation of Serial No. 399,282 filed December 21, 1953, and subsequently abandoned.

We claim:

1. An electromechanical transducer element comprising a body of spongoid structure formed with macroscopic interstices throughout, said body consisting essentially of ferroelectric ceramic material capable of a substantial electromechanical response.

2. An electromechanical transducer element in the for of a fired spongoid body consisting of polycrystalline ferroelectric ceramic material capable of a substantial piezoelectric response having a substantially lower bulk density than theoretical density of said material.

3. An electromechancial transducer element comprising a body of polarizable ferroelectric material of macroscopic porosity.

4. An electromechanical transducer element according to claim 3, wherein said material is composed primarily of barium titanate.

5. An electromechanical transducer element according to claim 3, wherein said material is composed primarily of lead zirconate titanate.

6. An electromechanical transducer element comprising an aerated body consisting primarily of polycrystalline ferroelectric ceramic material permanently polarized in one direction and of spongiform structure throughout, the bulk density of said body being substantially lower than the theoretical density of said ceramic material, and electrodes in intimate contact with a pair of opposite faces on the body.

7. An electromechanical transducer element according to claim 6 wherein said pair of faces extend perpendicular to the direction of polarization.

8. An electromechanical transducer element in the form of a fired macroscopically porous ceramic body consisting primarily of a polarizable ferroelectric ceramic material selected from the group consisting of barium titanate and lead zirconate titanate and having a density within the range from about 0.5 to 4.0 grams per cc.

References Cited in the file of this patent

UNITED STATES PATENTS

1,963,030	Powell	June 12, 1934
1,968,052	Norton	July 31, 1934
1,998,686	Parsons	Apr. 23, 1935
2,235,881	France	Mar. 25, 1941
2,497,108	Williams	Aug. 14, 1950
2,554,327	Gravley	May 22, 1951
2,625,663	Howatt	Jan. 13, 1953
2,691,738	Matlhias	Oct. 12, 1954
2,708,244	Jaffe	May 10, 1955
2,759,241	Strum	Aug. 21, 1956
2,787,520	Meiners	Apr. 2, 1957