(No Model.) 2 Sheets—Sheet 1.

A. SCHNOOR.

SAW SETTING MACHINE.

No. 363,854. Patented May 31, 1887.

FIG. 1.

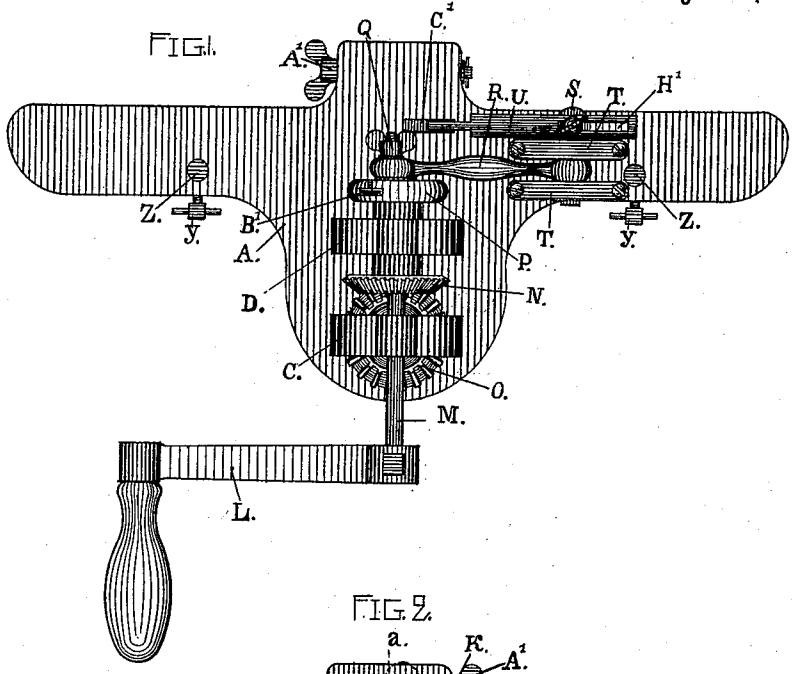

FIG. 2.

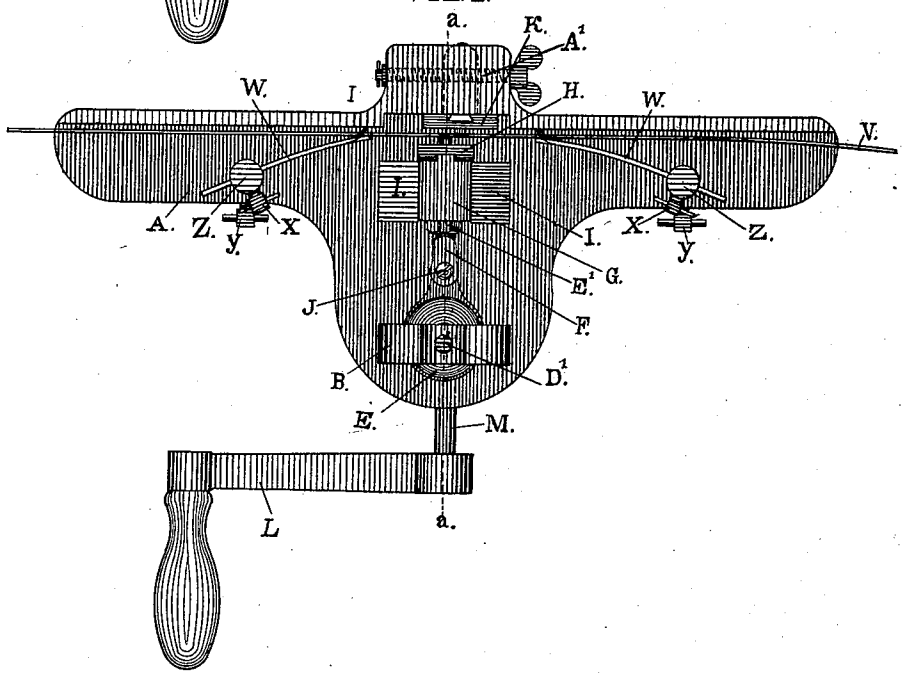

ATTEST,
John H. Redstone
Albert E. Redstone.

INVENTOR,
August Schnoor.

N. PETERS. Photo-Lithographer, Washington, D. C.

(No Model.)

2 Sheets—Sheet 2.

A. SCHNOOR.

SAW SETTING MACHINE.

No. 363,854. Patented May 31, 1887.

FIG. 3.

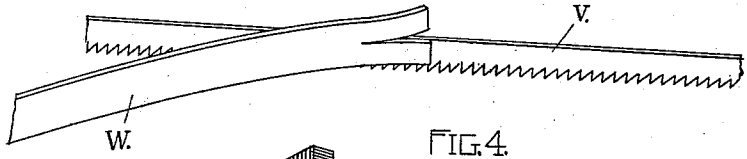

FIG. 4.

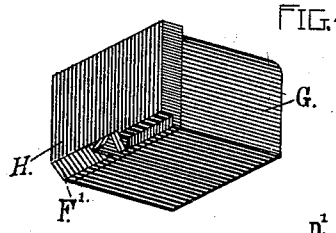

FIG. 5.

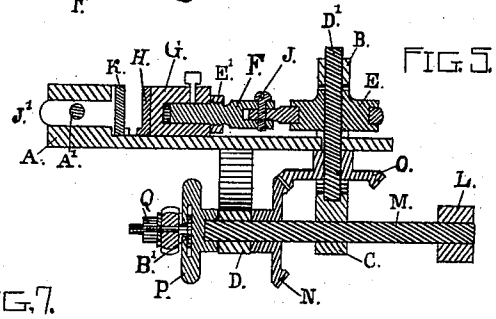

FIG. 7.

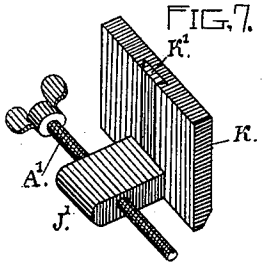

FIG. 6.

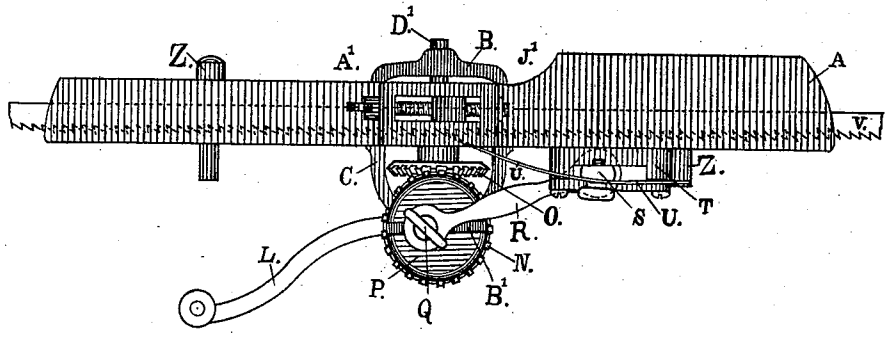

ATTEST,
John H. Redstone
Albert E. Redstone,

INVENTOR,
August Schnoor.

N. PETERS, Photo-Lithographer, Washington, D. C.

UNITED STATES PATENT OFFICE.

AUGUST SCHNOOR, OF OAKLAND, CALIFORNIA.

SAW-SETTING MACHINE.

SPECIFICATION forming part of Letters Patent No. 363,854, dated May 31, 1887.

Application filed February 5, 1886. Serial No. 190,904. (No model.)

To all whom it may concern:

Be it known that I, AUGUST SCHNOOR, a citizen of the United States, residing at Oakland, in the county of Alameda and State of California, have invented a new and useful Saw-Setting Machine, of which the following is a specification.

My invention relates to improvements in machines for setting saws; and it consists in the construction, combination, and arrangement of certain devices for regulating the feed and setting the teeth, which will be understood by reference to the accompanying drawings.

Figure 1 is an under plan view. Fig. 2 is a top plan view. Fig. 3 is a perspective view showing a broken part of a band saw and the adjustable saw-guide springs. Fig. 4 is a perspective view of the set block and die. Fig. 5 is a cross-section of Fig. 2, cut vertically through the dotted line *a a*. Fig. 6 is a rear elevation; and Fig. 7 is a detail perspective view of the brace-die, the adjusting-screw, and the support J.

A represents the bed-frame or main frame of the machine.

B, C, and D represent the frame to support the gearing.

E represents the setting-cam.

F represents the front setting-die-holder stem; G, the setting-die holder; H, the front die; I, the die-holder guide-block; J, the joint of the die-holder stem; K, the back die; L, the crank; M, the main shaft; N and O, the miter gear; P, the slotted crank face-plate; Q, the wrist-pin and set-screw; R, the connecting-rod; S, the cross-head; T T, the side guides; U, the feed-tongue for feeding the saw through the machine; V, the saw; W W, the adjustable saw-guide and holding-springs; X X, the adjustable saw-guide-spring set-screws; Y Y, the guide-spring-post set-screws; Z Z, the adjustable saw-guide post; A′, the adjusting screw for the back die-block; B′, the slot in the crank face-plate, to allow the adjustment of the wrist-pin Q to regulate the length of stroke to suit the size of the saw-teeth. C′ represents the slot for the feed-spring U to pass through.

The following is the construction of the same: I generally cast the machine of any suitable metal castings and malleable metal. The frames B and C support the main shaft M, to which the miter-wheel N and the crank-pin face-plate P are attached. The pitman or connecting rod R is attached by the crank-pin Q in the slot B′, in which it is moved for adjusting the feed to the size of the saw-tooth. The feed-tongue U is attached to the cross-head S, and passes through the slot C′ to engage with the teeth of the saw V. The miter-wheel N gears with the miter-wheel O, which is upon the shaft D′, to which the cam or eccentric E is attached for the purpose of giving motion to the die-holder G and the die H. The die H has the recess F′ to receive the saw-tooth as it is bent over in setting by the die K, and the die K has a corresponding recess to receive the tooth as it is set by the die H. The die K has a dovetailed slot, K′, to receive a dovetailed standard which projects from a base, J, and passing through said support is the adjusting-screw A′. The faces of the dies H and K are designed to come together upon the saw, thus preventing any wrinkling or bending of the saw in setting.

The following is the operation of my improved saw-setting machine: The saw is placed in the same with the teeth down, as shown in the plan view, Fig. 2, and in the side elevation, Fig. 6. The adjusting guide-springs W and W are then placed so as to hold the saw down to a bearing, and the set-screws X X and Y Y are set fast, thus guiding the saw as it is fed along by the feed-tongue U. The crank L is then revolved, revolving the wheel N and crank face-plate P. The crank face-plate P imparts a reciprocating motion to the feed-tongue U by means of the pitman or connecting rod R and the cross-head S. At each revolution of the same the feed-tongue U is drawn back over two teeth of the saw and carries the saw forward with two teeth to be set. At the same time the wheel O, being of the same size as the wheel N, is revolved by the same, and the eccentric E, being set to alternate at the proper time, forces the die H against the saw V, bringing dies H and K together upon the same and setting the two teeth, as will be readily understood.

The same machine may be employed to set other saws, although it is best adapted to setting a band-saw, a broken part of which is shown, referred to by the letter V in Figs. 2,

3, and 6. The feed-tongue U is adjusted upon the cross-head S by means of the slot H′, so as to adapt the saw-teeth to the position of the saw-setting dies H and K. The nut E′ is designed as a set-nut for the die-holder, as it is adjusted upon the die-holder stem F to adapt the die to the thickness of the saw to be set. The die K has the adjusting-slot K′.

I do not confine myself to any exact size or form in constructing the parts of the machine described, as they may be varied in these particulars without changing the principle of the invention; but,

Having thus described my invention, what I claim, and desire to secure by Letters Patent, is—

1. The feed-tongue U, to operate through the slot C′, and having the adjusting-slot H′, to allow the adjustment of the same upon the cross-head S, in combination with the cross-head S, the guides T T, the connecting-rod R, the face-plate P, having the adjusting slot B′, and wrist or crank pin Q for the purpose of feeding the saw V to the teeth-setting die, constructed and operated substantially as and for the purposes set forth.

2. The combination of the dies H and K with adjustable stem J′, adjusting-screw A′, the die-holder G, guides I, die-holder stem F, joint J, nut E′, and eccentric or cam E, for the purpose of holding, adjusting, and operating the dies in setting the teeth of a saw, constructed and operated substantially as and for the purposes set forth.

3. The adjustable spring saw-guides W W for the purpose of guiding and holding the saw in position, constructed and operated substantially as and for the purposes set forth.

4. The feed-tongue U, cross-head S, guides T T, pitman R, face-plate P, having the slot B′ and wrist Q, in combination with the adjustable die K, with slot K′ and stem J′, the die H, die-holder G, the stem F, set-nut E′, joint J, the cam or eccentric E, the shaft M, the miter-wheels N and O, the set-screw A′, and slot C′, for the purpose of feeding and setting a saw, constructed and operated substantially as and for the purposes set forth.

AUGUST SCHNOOR.

Witnesses:
WILLIAM S. O'BRIEN,
A. C. LAWSON.