677781

AUSTRALIA

Patents Act 1990

P/00/008 : Section 29

NOTICE OF ENTITLEMENT

We **TRUSTEES OF THE UNIVERSITY OF PENNSYLVANIA** of 3700 Market Street, Suite 300, Philadelphia, Pennsylvania, 19104, United States of America being the Nominated Person in respect of Application No. 42226/93 state the following :

1. TRUSTEES OF THE UNIVERSITY OF PENNSYLVANIA is the Nominated Person in respect of the application

2. The actual inventors of the invention, the subject of the application are:

   KRICKA, Larry J. and WILDING Peter.

3. The Nominated Person is entitled to the grant of a patent in respect of the application because the said Nominated Person derived title to the invention from the actual inventors by assignment.

4. The Nominated Person is entitled to claim priority from the applications listed in the declaration under Article 8 of the PCT because the Nominated Person is the assignee of the applicant in respect of the applications listed in the declaration under Article 8 of the PCT, and because the applications were the first applications made in a Convention country in respect of the invention.

Dated this 18th day of February, 1997.

Mark Roberts

a member of the firm of
DAVIES COLLISON CAVE
for and on behalf of
the applicant(s).

AU9342226

(12) PATENT ABRIDGMENT (11) Document No. AU-B-42226/93
(19) AUSTRALIAN PATENT OFFICE (10) Acceptance No. 677781

(54) Title
MICROFABRICATED SPERM HANDLING DEVICES

International Patent Classification(s)
(51)[5] C12M 003/00 B01L 003/00 C12M 001/34

(21) Application No. : 42226/93 (22) Application Date : 29.04.93

(87) PCT Publication Number : WO93/22421

(30) Priority Data

(31) Number	(32) Date	(33) Country
877536	01.05.92	US UNITED STATES OF AMERICA
877661	01.05.92	US UNITED STATES OF AMERICA
877662	01.05.92	US UNITED STATES OF AMERICA
877701	01.05.92	US UNITED STATES OF AMERICA
877702	01.05.92	US UNITED STATES OF AMERICA

(43) Publication Date : 29.11.93

(44) Publication Date of Accepted Application : 08.05.97

(71) Applicant(s)
TRUSTEES OF THE UNIVERSITY OF PENNSYLVANIA

(72) Inventor(s)
LARRY J KRICKA; PETER WILDING

(74) Attorney or Agent
DAVIES COLLISON CAVE , GPO Box 3876, SYDNEY NSW 2001

(56) Prior Art Documents
AU 42225/93 B01L
AU 42227/93 C12M

(57)

FIGURE 1 is a magnified plan view of device 10 according to the invention that comprises substrate 14 microfabricated with ports 16, mesoscale flow channel 20, and a fractally bifurcating system of flow channels 40.

CLAIM

1. A device for in vitro fertilisation, the device comprising:
a solid substrate microfabricated to define:
an egg nesting chamber;
a sperm inlet port; and
an elongate channel containing a sperm medium, at least a portion of said channel having a cross-sectional dimension of about 0.1 to 500μm, and said channel communicating between said egg nesting chamber and said sperm inlet port, which permits competitive sperm migration from said inlet port to said nesting chamber for egg fertilisation.

OPI DATE 29/11/93 APPLN. ID 42226/93
AOJP DATE 10/02/94 PCT NUMBER PCT/US93/04017

AU9342226

INTERNATIONAL APPLICATION PUBLISHED UNDER THE PATENT COOPERATION TREATY (PCT)

(51) International Patent Classification 5 :
C12M 3/00, B01L 3/00
C12M 1/34

A1

(11) International Publication Number: WO 93/22421

(43) International Publication Date: 11 November 1993 (11.11.93)

(21) International Application Number: PCT/US93/04017

(22) International Filing Date: 29 April 1993 (29.04.93)

(30) Priority data:

877,536	1 May 1992 (01.05.92)	US
877,661	1 May 1992 (01.05.92)	US
877,662	1 May 1992 (01.05.92)	US
877,701	1 May 1992 (01.05.92)	US
877,702	1 May 1992 (01.05.92)	US

(71) Applicant: TRUSTEES OF THE UNIVERSITY OF PENNSYLVANIA [US/US]; 3700 Market Street, Suite 300, Philadelphia, PA 19104 (US).

(72) Inventors: KRICKA, Larry, J. ; 886 Nathan Hale Road, Berwyn, PA 19312 (US). WILDING, Peter ; 208 Darby Road, Paoli, PA 19301 (US).

(74) Agent: PITCHER, Edmund, R.; Testa, Hurwitz & Thibeault, Exchange Place, 53 State Street, Boston, MA 02109 (US).

(81) Designated States: AU, CA, JP, European patent (AT, BE, CH, DE, DK, ES, FR, GB, GR, IE, IT, LU, MC, NL, PT, SE).

Published
With international search report.
Before the expiration of the time limit for amending the claims and to be republished in the event of the receipt of amendments.

677781

(54) Title: MICROFABRICATED SPERM HANDLING DEVICES

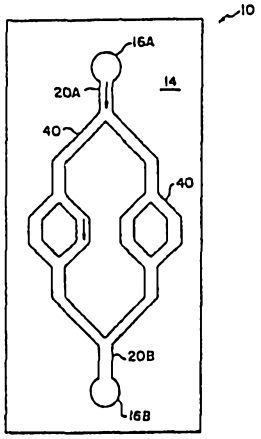

(57) Abstract

Disclosed are devices and methods for the clinical analysis of a sperm sample. The devices comprise a solid substrate, typically on the order of a few millimeters thick and approximately 0.2 to 2.0 centimeters square, microfabricated to define a sample inlet port (16A) and a mesoscale flow channel (20, 40) extending from the inlet port (16A). In one embodiment, a sperm sample is applied to the inlet port (16A), and the competitive migration of the sperm sample through the mesoscale flow channel (20, 40) is detected to serve as an indicator of sperm motility. In another embodiment, the substrate of the device is microfabricated with a sperm inlet port (16A), an egg nesting chamber (16B), and an elongate mesoscale flow channel (20, 40) communicating between the egg nesting chamber (16B) and the inlet port (16A). In this embodiment, a sperm sample is applied to the inlet port, and the sperm in the sample is permitted to competitively migrate from the inlet port (16A) through the channel (20, 40) to the egg nesting chamber (16B), where *in vitro* fertilization occurs. The devices of the invention may be used in a wide range of applications in the analysis of a sperm sample, including the analysis of sperm morphology or motility, to assess sperm binding properties, and for *in vitro* fertilization.

MESOSCALE SPERM HANDLING DEVICES

Background of the Invention

This invention relates generally to methods and apparatus for conducting analyses. More particularly, the invention relates to the design and construction of small, typically single-use, modules capable of rapidly analyzing microvolumes of a fluid sample.

In recent decades the art has developed a very large number of protocols, test kits, and cartridges for conducting analyses on biological samples for various diagnostic and monitoring purposes. Immunoassays, agglutination assays, and analyses based on polymerase chain reaction, various ligand-receptor interactions, and differential migration of species in a complex sample all have been used to determine the presence or concentration of various biological compounds or contaminants, or the presence of particular cell types.

Recently, small, disposable devices have been developed for handling biological samples and for conducting certain clinical tests. Shoji et al. reported the use of a miniature blood gas analyzer fabricated on a silicon wafer. Shoji et al., Sensors and Actuators, 15:101-107 (1988). Sato et al. reported a cell fusion technique using micromechanical silicon devices. Sato et al., Sensors and Actuators, A21-A23:948-953 (1990). Ciba Corning Diagnostics Corp. (USA) has manufactured a microprocessor-controlled laser photometer for detecting blood clotting.

AUSTRALIAN PATENT OFFICE

AMENDED SHEET

Micromachining technology originated in the microelectronics industry. Angell et al., Scientific American, 248:44-55 (1983). Micromachining technology has enabled the manufacture of microengineered devices having structural elements with minimal dimensions ranging from tens of microns (the dimensions of biological cells) to nanometers (the dimensions of some biological macromolecules). This scale is referred to herein as "mesoscale". Most experiments involving mesoscale structures have involved studies of micromechanics, i.e., mechanical motion and flow properties. The potential capability of mesoscale structures has not been exploited fully in the life sciences.

Brunette (Exper. Cell Res., 167:203-217 (1986) and 164:11-26 (1986)) studied the behavior of fibroblasts and epithelial cells in grooves in silicon, titanium-coated polymers and the like. McCartney et al. (Cancer Res., 41:3046-3051 (1981)) examined the behavior of tumor cells in grooved plastic substrates. LaCelle (Blood Cells, 12:179-189 (1986)) studied leukocyte and erythrocyte flow in microcapillaries to gain insight into microcirculation. Hung and Weissman reported a study of fluid dynamics in micromachined channels, but did not produce data associated with an analytic device. Hung et al., Med. and Biol. Engineering, 9:237-245 (1971); and Weissman et al., Am. Inst. Chem. Eng. J., 17:25-30 (1971). Columbus et al. utilized a sandwich composed of two orthogonally orientated v-grooved embossed sheets in the control of capillary flow of biological fluids to discrete ion-selective electrodes in an experimental multi-channel test device. Columbus et al., Clin. Chem., 33:1531-1537 (1987). Masuda et al. and Washizu et al. have reported

AUSTRALIAN PATENT OFFICE

AMENDED SHEET

the use of a fluid flow chamber for the manipulation of cells (e.g. cell fusion). Masuda et al., Proceedings IEEE/IAS Meeting, pp. 1549-1553 (1987); and Washizu et al., Proceedings IEEE/IAS Meeting pp. 1735-1740 (1988). The art has not fully explored the potential of using mesoscale devices for the analyses of biological fluids and detection of microorganisms.

The current analytical techniques utilized for the detection of microorganisms and cells are rarely automated, invariably employ visual and/or chemical methods to identify the strain or sub-species, and are inherently slow procedures. There is a need for convenient and rapid systems for clinical assays. There is particularly a growing need for standardized procedures for the analysis of semen, capable of providing reliable and rapid results, which may be used in the assessment of male infertility, and for a range of other applications including in vitro fertilization (IVF), artificial insemination by donor semen (AID) and forensic medicine. The World Health Organization, WHO Laboratory Manual for the Examination of Human Semen and Semen-Cervical Mucus Interaction, Cambridge University Press, Cambridge, U.K. (1987). The evaluation of male infertility through the analysis of semen involves a range of tests including the assessment of sperm count, motility, morphology, hormone levels, sperm antibodies, sperm cervical mucus interaction and sperm biochemistry. Wang et al., American Association for Clinical Chemistry, Endo. 10:9-15 (1992). There is a need for systems capable of conducting a range of rapid and reliable analyses of a sperm sample.



An object of the invention is to provide analytical systems that can analyze microvolumes of a sperm sample and produce analytical results rapidly. Another object is to provide easily mass produced, disposable, small (e.g., less than 1 cc in volume) devices having mesoscale functional elements capable of rapid, automated analyses of sperm, in a range of applications. It is a further object of the invention to provide a family of such devices that individually can be used to implement a range of rapid tests, e.g., tests for sperm motility, and morphology. Another object is to provide a family of devices for conducting an *in vitro* fertilization in one device using microvolumes of sample.

AUSTRALIAN PATENT OFFICE

Summary of the Invention

The invention provides methods and apparatus for sperm handling. The devices may be used in a range of applications including sperm motility and morphology testing and in vitro fertilisation. In one embodiment, the invention provides a device comprising a solid substrate, typically on the order of a few millimeters thick and approximately a 0.2 to 2.0 centimeters square, microfabricated to define a sample inlet port and a mesoscale channel system.

According to one embodiment of the present invention there is provided a device for in vitro fertilisation, the device comprising:

a solid substrate microfabricated to define:

an egg nesting chamber;

a sperm inlet port ; and

an elongate channel containing a sperm medium, at least a portion of said channel having a cross-sectional dimension of about 0.1 to 500 μm, and said channel communicating between said egg nesting chamber and said sperm inlet port, which permits competitive sperm migration from said inlet port to said nesting chamber for egg fertilisation.

In another embodiment, the substrate may comprise a sperm inlet port and a mesoscale channel, extending from the inlet port. In this embodiment, sperm may be applied to the inlet port, and the extent of migration of the sperm through the channel can serve as an indicator of sperm motility or morphology. The term "mesoscale" is used herein to define flow passages having cross-sectional dimensions on the order of approximately 0.1 μm to 500 μm, with preferred widths on the order of 2.0 to 300 μm, more preferably 3 to 100 μm. For many applications, channels of 5 - 50 μm widths will be useful. Chambers in the substrates often will have larger dimensions, e.g., a few millimeters. Preferred depths of channels and chambers are on the order of 0.1 to 100 μm, typically 2 - 50 μm.

In one embodiment, the mesoscale channel of the device may comprise a fractal region, comprising bifurcations leading to plural secondary channels, to enhance the detection or competitive migration of the sperm sample. The fractal region may comprise, equal numbers of bifurcations and junctions disposed serially along the direction of sperm migration. In one embodiment, the branching channels in the fractal region progressively decrease in cross-sectional area at each bifurcation and increase at each junction. The use of a mesoscale fractal flow channel is disclosed in USSN 07/877,701 filed May 1, 1992 (corresponding to PCT WO 93/22054, published November 11, 1993), the disclosure of which is incorporated herein by reference. The devices and methods of the invention may be used to implement a variety of automated, sensitive and rapid, contaminant-free tests including clinical analyses of sperm properties and for rapid in vitro fertilization.

Generally, as disclosed herein, the solid substrate comprises a chip containing the mesoscale channel and other functional elements. The channels and elements may be designed and microfabricated from silicon and other solid substrates using established micromachining methods. The chambers and channels in the devices may be microfabricated on the surface of the substrate, and then a cover, e.g., a transparent glass cover, may be adhered, e.g., anodically bonded over the surface. The devices typically are designed on a scale suitable to analyze microvolumes (<10 μL) of sample, introduced into the flow system through an inlet port defined, e.g., by a hole communicating with the flow system through the substrate or cover slip. The volume of the mesoscale channels and chambers typically will be

AUSTRALIAN PATENT OFFICE

<5 μL, and the volumes of individual channels, chambers, or other functional elements are often less than 1 μL, e.g., in the nanoliter or even picoliter range. Assays can be conducted rapidly and after an assay is complete, the devices can be discarded.

The chips may be used with an appliance which contains a nesting site for holding the chip, and which mates one or more input ports on the chip with one or more flow lines in the appliance. Before or after a sperm sample is applied to the inlet port of the substrate, the chip may be placed in the appliance, and a pump, e.g., in the appliance, can be actuated to introduce a buffer or other fluid to hydraulically fill the channels and chambers or to force the sperm sample or other fluid components into (or out of) the flow system. Alternatively, sperm may be injected into the chip by the appliance. A sperm sample or other fluid component also may enter the channel system simply by capillary action through an inlet port.

The fluid contents of the channels and chambers of the devices may be observed optically, either visually or by machine, through a translucent window, such as a transparent cover over the channel system, or through a translucent section of the substrate itself. Thus, the devices permit the optical detection, e.g., of sperm migration in a channel, or in another embodiment, egg fertilization in an egg nesting chamber. The appliance may comprise means for viewing the contents of the device such as an optical viewing system, such as a microscope or a camera.

In another embodiment, the substrate of the device may include a sperm inlet port, a mesoscale channel extending from the inlet port, and a mesoscale detection chamber in fluid communication with the flow channel. The mesoscale detection chamber is provided with a binding moiety capable of binding with a preselected component of a sperm sample. The detection chamber may be provided, e.g., with a binding moiety capable of detectably binding to a sperm antibody or hormone, to enable the detection of a specific sperm component.

The use of a detection region allows a range of binding assays to be performed on a sperm sample. The use of a mesoscale detection chamber is disclosed in USSN 07/877,702, filed May 1, 1992 (corresponding to PCT WO 93/22053, published November 11, 1993).

Some of the features and benefits of devices constructed in accordance with the teachings disclosed herein are summarized in Table 1. A device may include two or more separated systems, e.g., fed by a common inlet port, to implement a plurality of assays. The device may also comprise a control system so that data from the sample region and the control region may be detected and compared. The devices can be used to implement a range of rapid clinical tests for the analysis of a sperm sample. The devices may be utilized, e.g., for the detection of the motility or morphology of a sperm sample or to test the presence of sperm antibodies or hormones, or to test the interaction of sperm with cervical mucus, or other assays used in infertility testing. In addition, the devices may be utilized to test the interaction of a

sperm sample with other reagents such as spermicides. The invention provides methods and devices for use in a wide range of possible assays. Assays may be completed rapidly, and at the conclusion of the assay the chip can be discarded, which advantageously prevents contamination between samples, entombs potentially biologically hazardous material, and provides an inexpensive, microsample analysis.

TABLE 1

Feature	Benefit
Flexibility	No limits to the number of chip designs or applications available.
Reproducible	Allows reliable, standardized, mass production of chips.
Low Cost Production	Allows competitive pricing with existing systems. Disposable nature for single-use processes.
Small Size	No bulky instrumentation required. Lends itself to portable units and systems designed for use in non-conventional lab environments. Minimal storage and shipping costs.
Microscale	Minimal sample and reagent volumes required. Reduces reagent costs, especially for more expensive, specialized test procedures. Allows simplified instrumentation schemes.

Sterility	Chips can be sterilized for use in microbiological assays and other procedures requiring clean environments.
Sealed System	Minimizes biohazards. Ensures process integrity.
Multiple Circuit Capabilities	Can perform multiple processes or analyses on a single chip. Allows panel assays.
Multiple Detector Capabilities	Expands capabilities for assay and process monitoring to virtually any system. Allows broad range of applications.
Reuseable Chips	Reduces per process cost to the user for certain applications.

Brief Description of the Drawings

FIGURE 1 is a magnified plan view of device 10 according to the invention that comprises substrate 14 microfabricated with ports 16, mesoscale flow channel 20, and a fractally bifurcating system of flow channels 40.

FIGURE 2 is a longitudinal cross sectional view of the device shown in Figure 1.

FIGURE 3 is a perspective view of the device of Figure 1.

FIGURE 4 is a schematic cross sectional view of an analytical device 10 nested within an appliance 50, which is used to support the device 10 and to deliver and receive sample fluids to and from device 10.

FIGURE 5 is a schematic plan view of a substrate 14 microfabricated with a fractally bifurcating system of flow channels 40 symmetrically disposed on the substrate, and tapering to a narrower diameter towards the center of the fractal system.

FIGURE 6 is a schematic plan view of device 10 that includes substrate 14 microfabricated with a fractally bifurcating system of flow channels 40, provided with beads 42 to enhance flow restriction and agglomeration in the fractal.

FIGURE 7 is a magnified plan view of a device 10 which includes a sperm chamber 22C and an egg nesting chamber 22D which are connected by the fractal flow system 40.

FIGURE 8 is a cross sectional perspective view of flow channel 20 on an inert substrate 14, with protrusions 122 extending from a wall of the flow channel, which serve as a barrier to the migration of sperm.

FIGURE 9 is a schematic plan view of a multitest apparatus constructed in accordance with the invention.

FIGURE 10 is a schematic plan view of an analytical device fabricated with a pair of fractally bifurcating flow channels 40.

FIGURE 11 is a schematic perspective view of an apparatus 60 used in combination with device 10 for viewing the contents of device 10.

FIGURE 12 is a schematic cross sectional view of the apparatus 60 of Figure 11.

FIGURE 13, 14 and 15 illustrate top plan views of magnified different embodiments of a mesoscale filter 24 microfabricated in a flow channel 20 in an analytical device 10.

Like reference characters in the respective drawn figures indicate corresponding parts.

Detailed Description

The invention provides methods and apparatus for sperm handling, which may be utilized in a range of applications including sperm motility and morphology testing and in vitro fertilization. The invention provides a device comprising a solid substrate, typically on the order of a few millimeters thick and approximately 0.2 to 2.0 centimeters square, microfabricated to define a sperm inlet port and a mesoscale flow system extending from the inlet port. In one embodiment, a sperm sample is applied to the inlet port and the extent of migration of the sperm through the channel can serve as an indication of, e.g., the motility or morphology of the sperm sample. In another embodiment, the substrate may further include an egg nesting chamber, and an elongate channel of mesoscale cross sectional dimension, communicating between the egg nesting chamber and the sperm inlet port. In operation, a sperm sample is applied to the inlet port, and sperm in the sample then migrate competitively through the channel to the egg chamber, where fertilization of the egg occurs.

Analytical devices having mesoscale flow systems can be designed and fabricated in large quantities from a solid substrate material. They can be sterilized easily. Silicon is a preferred substrate material because of the well-developed technology permitting its precise and efficient fabrication, but other materials may be used including cast or molded polymers including polytetrafluoroethylenes. The sample inlet and other ports, the mesoscale flow system, including the flow channel(s) and other functional elements, may be

fabricated inexpensively in large quantities from a silicon substrate by any of a variety of micromachining methods known to those skilled in the art. The micromachining methods available include film deposition processes such as spin coating and chemical vapor deposition, laser fabrication or photolithographic techniques such as UV or X-ray processes, or etching methods which may be performed by either wet chemical processes or plasma processes. (See, e.g., Manz et al., Trends in Analytical Chemistry, 10: 144-149 (1991)).

Flow channels of varying widths and depths can be fabricated with mesoscale dimensions for use in analyzing a sperm sample. The silicon substrate containing a fabricated mesoscale flow channel may be covered and sealed, e.g., anodically bonded, with a thin glass cover. Other clear or opaque cover materials may be used. Alternatively, two silicon substrates can be sandwiched, or a silicon substrate can be sandwiched between two glass covers. The use of a transparent cover results in a window which facilitates dynamic viewing of the channel contents, and allows optical probing of the mesoscale flow system either visually or by machine. Other fabrication approaches may be used.

The capacity of the devices is very small and therefore the amount of sample fluid required for an analysis is low. For example, in a 1 cm x 1 cm silicon substrate, having on its surface an array of 500 grooves which are 10 microns wide x 10 microns deep x 1 cm (10^4 microns) long, the volume of each groove is 10^{-3} μL and the total volume of the 500

AUSTRALIAN PATENT OFFICE

grooves is 0.5 μL. The low volume of the mesoscale flow systems allows assays to be performed on very small amounts of a liquid sample (<5 μL). The mesoscale devices may be microfabricated with microliter volumes, or alternatively nanoliter volumes or less, which advantageously limits the amount of sample, buffer or other fluids required for an analysis. Thus, an important consequence and advantage of employing flow channels having mesoscale dimensions is that very small scale analyses can be performed.

In one embodiment, illustrated schematically in Figures 1, 2 and 3, the device 10 may be utilized for a rapid assay of, e.g., the motility or morphology of a sperm sample. Device 10 includes a silicon substrate 14 microfabricated with ports 16, primary sample channel 20A, and a fractal system of channels 40. The ports may be microfabricated with mesoscale or larger dimensions. The fractal region 40 in this case comprises equal numbers of bifurcations and junctions, disposed serially through the fractal region, leading to a third channel 20B. The substrate 14 is covered with a clear glass or plastic window 12 to form an enclosing wall of the channels. In operation, after hydraulically filling all channels with an appropriate liquid medium, e.g., cervical mucus or a buffer, a sperm sample is applied at inlet port 16A. Sperm in the sample migrate into flow channel 20A, and then through the fractal region 40 towards channel 20B and port 16B. The extent of progress of a sperm sample through the fractal path 40 can serve as an indicator of sperm motility and morphology. The flow of a sperm sample may be detected optically, e.g., with a

microscope, either visually or by machine, through the transparent cover over the flow system, or through a transparent region of the substrate itself.

In another embodiment, the fractal system 40 may be microfabricated on a silicon substrate with reduced dimensions at each bifurcation, providing sequentially narrower flow channels, as illustrated schematically in Figure 5. Figure 5 shows device 10, which comprises substrate 14 microfabricated with fractal flow channels 40, which have a reduced cross-sectional area relative to the primary flow channel 20A and the third flow channel 20B. In operation, sperm in a sample enter device 10 through inlet port 16A and channel 20A, and migrate through the fractal region 40 towards channel 20B and port 16B. The fractal region 40 provides an extensive network suitable for the competitive migration of a sperm sample. The fractal system may be microfabricated with a more complex series of bifurcations, as illustrated schematically in device 10 in Figure 10, which includes a pair of fractally bifurcating channels 40A and 40B. The fractal channel network 40A is constructed with sequentially narrower channels towards the center of the fractal, thereby enhancing sensitivity to sperm migration.

The analytical devices containing the mesoscale channel system can be used in combination with an appliance for delivering and receiving fluids to and from the devices, such as appliance 50 shown schematically in Figure 4, which incorporates a nesting site 58 for holding the device 10, and for registering ports, e.g., ports 16 on the device 10, with a flow line 56 in the appliance. The appliance also includes

pump 52 which may be used to inject or receive sample fluids into or from device 10. Alternatively, the sample may be injected into the device, or may enter the flow system simply by capillary action. Devices such as valves and other mechanical sensors for detecting sample fluid in the devices can be fabricated directly on the silicon substrate and can be mass-produced according to well established technologies. Angell et al., Scientific American, 248:44-55 (1983). Alternatively, sensors such as optical detectors and other detection means may be provided in the appliance utilized in combination with the device.

In one embodiment, the analytical devices also may be utilized in combination with an appliance for viewing the contents of the devices. The appliance may comprise a microscope for viewing the contents of the chambers and channels in the devices. In another embodiment, a camera may be included in the appliance, as illustrated in the appliance 60 shown schematically in Figures 11 and 12. The appliance 60 is provided with a housing 62, a viewing screen 64 and a slot 66 for inserting a chip into the appliance. As shown in cross section in Figure 12, the appliance 60 may also include a video camera 68, an optical system 70, and a tilt mechanism 72 for holding device 10, and allowing the placement and angle of device 10 to be adjusted manually. The optical system 70 may include a lens system for magnifying the channel contents, as well as a light source. The video camera 68 and screen 64 allow sample fluids to be monitored visually, and optionally to be recorded using the appliance.

In another embodiment, the substrate may be disposed, e.g., in an appliance, at an angle with respect to a horizontal plane, to provide an incline for the travel of a sperm sample, to further enhance the detection of motility. In another embodiment, the sperm flow channel may comprise protrusions 122, illustrated in Figure 8, to provide a barrier for competitive migration of sperm.

The devices may be microfabricated with a mesoscale flow channel that includes a detection region for detecting a component of a sperm sample, such as sperm antibodies or hormones. The detection region may comprise a binding moiety, capable of binding to a predetermined component of the sperm sample. The binding moiety, such as an antigen binding protein, may be immobilized on the surface of the flow channels, or on a solid phase reactant such as a bead. The binding moiety in the detection region may be introduced into the detection region in solution, or alternatively, may be immobilized on the surface of the mesoscale flow channels by, e.g., physical absorption onto the channel surfaces, or by chemical activation of the surface and subsequent attachment of biomolecules to the activated surface. Techniques available in the art may be utilized for the chemical activation of silaceous channel surfaces, and for the subsequent attachment of a binding moiety to the surfaces. (See, e.g., Haller in: Solid Phase Biochemistry, W.H. Scouten, Ed., John Wiley, New York, pp 535-597 (1983); and Mandenius et al., Anal. Biochem., 137:106-114 (1984), and Anal. Biochem., 170:68-72 (1988)). The use of a binding moiety for assays in a mesoscale detection chamber, as well as techniques for providing the binding moiety in

the detection chamber, are disclosed in the copending related application, USSN 07/877,702, filed May 1, 1992 (corresponding to PCT WO93/22053, published November 11, 1993). The detection chamber may be utilized in a range of binding assays, e.g., to assay the interaction of a sperm sample with cervical mucus, to test the efficacy of spermicides, to assay for the presence of antibodies or contaminants in the sample, or to conduct sperm counts.

In one embodiment, the binding moiety may be immobilized on a particle capable of inducing detectable agglomeration of a component of a sperm sample in a fractal mesoscale flow system. As illustrated in device 10, shown schematically in Figure 6, particles 42, coated with binding protein specific for a given analyte in the sperm sample, may be provided in the fractal region 40 to promote analyte-induced agglomeration of fluid in the fractal region. Agglomeration in the fractal region may be detected optically through a window, e.g., disposed over the fractal region, or, e.g., by detecting pressure or conductivity changes of the sample fluid.

In another embodiment, the devices of the invention may be utilized to conduct an in vitro fertilization. One embodiment of an in vitro fertilization device is shown in Figure 7. Device 10 in Figure 7 includes a sperm chamber 22C and an egg nesting chamber 22D, connected by a mesoscale fractal channel system 40. The device includes a clear cover 12, which is disposed over the fractal region and partly across the top of chambers 22C and 22D, leaving an open port at the top of the chambers. Alternatively, the cover 12 may extend over the entirety of the surface (not shown),

AUSTRALIAN PATENT OFFICE

and define holes disposed over the chamber 22C and 22D, which permit introduction of sperm and egg, but discourage evaporation. In operation, a sperm sample is applied to chamber 22C, e.g., through the top of the chamber. An egg is placed in the nesting chamber 22D. The flow system including chambers 22C and 22D, channels 20 and the fractal region 40, are provided with a buffer including, e.g., mammalian tubal fluid. The flow system also can include the buffer chambers 22B and 22A, in fluid communication with the flow system, which are filled with buffer to alleviate the potentially destructive effects of fluid loss from evaporation or dehydration from within the substrate. Competitive migration of the sperm sample from chamber 22C occurs through the fractal region 40 to the egg nesting chamber 22D where fertilization of the egg occurs. Fertilization can be determined, e.g., optically, either visually or by machine, by observing early stages of egg cell division. The device may be utilized in combination with an appliance mated to ports in the device for the addition or withdrawal of fluid components from the device. The appliance may include, e.g., means, such as a pump or syringe, for hydraulically expelling a fertilized egg from the device subsequent to fertilization, e.g., directly into a host uterus, e.g., by forcing saline or other liquid through the channels.

The mesoscale channel system may be microfabricated with a a filter for filtering sperm sample components. The filter may be microfabricated in the flow system between the sperm inlet port and the egg nesting region to enable the filtration of the sample. Filters which may be microfabricated in the flow system include the

filters 24 shown in Figures 13, 14 and 15. In the device 10, the Filter 24 is microfabricated between the flow channels 20A and 20B allowing sample fluid in channel 20A to pass through the filter 24. The filtrate exits through the filter 24 into channel 20B. Filter 24 comprises mesoscale flow channels of reduced diameter in comparison with channel 20A - 20B, microfabricated with depths and widths on the order of 0.1 to 20 μm. In contrast, the flow channels 20A and 20B have widths on the order of a maximum of approximately 500 μm and more typically 100 μm. Other filter means may be utilized, such as the posts 122 extending from a wall of the flow channel 20 shown in Figure 8.

The devices may be used to implement a variety of automated, sensitive and rapid clinical analyses of a sperm sample. The devices can be used in a range of applications including fertility tests of a sperm sample, tests of sperm binding properties, in vitro fertilization, and forensic analyses. In order to enhance the accuracy of an assay, the substrate may be fabricated to include a control region in the flow system, e.g., a region which is identical in geometry to the test region, but does not include binding moieties. Sample fluid is directed to both the analytical and control regions to allow the comparison of the regions. The devices also may comprise a plurality of mesoscale flow systems to enable a plurality of assays to be conducted on a sperm sample. At the conclusion of the assay the devices typically are discarded. The use of disposable devices eliminates contamination among samples. The sample at all times can remain entombed, and the low volume simplifies waste disposal.

The invention will be understood further from the following nonlimiting examples.

Example 1

Sperm motility is tested in the chip 10 shown schematically in Figure 5. A sample of semen (<2μL) is placed on a glass microscope slide, and the chip 10 is placed on top of the semen sample such that the port 16A is positioned on the semen sample. The progress of individual spermatozoa into port 16A, through channel 20A and fractal region 40 is monitored using a microscope. The experimental results may be compared with results previously established for a healthy sperm sample to provide a test of sperm motility.

Example 2

A channel containing a barrier 122 with 7μm gaps (illustrated in cross section in Figure 8) is filled with HTF-BSA medium and a semen sample applied at the entry hole. The progression of the sperm through the barrier serves as an indicator of sperm motility.

Example 3

Sperm functions are tested on the microfabricated solid substrate 14 shown in Figure 9. A sperm sample is added to the inlet port 16A and then flows through the mesoscale flow channel 20 to the detection chambers 40A, 40B and 40C. Fractal detection chamber 40A provides a test for leucocytes and comprises immobilized antibody to common leukocyte antigen. Fractal detection chamber 40B provides a test for sperm antibodies and contains immobilized antibody to human IgG, IgA or IgM. Fractal detection chamber 40C provides a test for acrosome reaction and contains

fluorescein labeled lectin. Flow restriction due to agglutination in the chambers may be detected, e.g., by optical detection through a glass cover disposed over the substrate. After the assay is complete, the device is discarded.

Example 4

A chip of the type illustrated in Fig. 7, defining an egg nesting chamber and a sperm inlet port, connected by a mesoscale channel, was washed with ultra-pure water and then filled with HTF-BSA. Eggs and semen were harvested from appropriate donors. A single egg was transferred to the egg nesting chamber using a micropipette, and a sample of semen was applied to the sperm inlet port using a micropipette. This entire procedure was conducted under a laminar flow hood and the application of the egg and semen was confirmed visually using a microscope. Progression (and selection of sperm) through the flow channel connecting the sperm inlet port and the egg nesting chamber containing the egg was confirmed visually. The chip was placed in a moist environment to minimize evaporation from the chip, and then incubated at 37°C for several hours. Fertilization of the egg was confirmed by visual inspection. Implantation of the fertilized egg was achieved by expelling the entire contents of the chip. Additionally, the chip contains a reservoir of HTF-BSA in connection with the chambers and flow channel in order to compensate for any evaporation from the chip.

Example 5

Experiments were performed in mesoscale flow channels testing the sperm motility of human semen samples. In a sperm motility test, microchannels (80 μm wide, 20 μm deep, and 10 mm long) in a glass-silicon chip were filled with Human Tubal Fluid (HTF) medium (Irvine Scientific, Santa Ana, CA) containing 0.5% BSA (HTF-BSA). A sample of semen ($<2\mu$L) was placed on a glass microscope slide and the chip placed on top of the semen sample such that the entrance to the channel was positioned on the semen sample. The progress of individual spermatozoa into the channel and along its length to the exit hole was monitored using a microscope, and recorded using a TV camera and video recorder. Sperm were observed traversing the entire length of the channel and could be seen accumulating in the exit hole. Migration of sperm was also demonstrated in channels of 40, 100, and 120 μm depths.

Sperm motility in fractal channels also was determined, by examining the distance the sperm travelled along the fractal flow path. The above experiment was repeated using a fractal channel (40 μm wide, 20 μm deep) filled with HTF-BSA medium. Sperm were observed migrating through the tortuous fractal pathway (a total of 10 right angle turns, e.g., the device of Figure 10) from the entry to the center of the channel. The experiment was repeated using a fractal channel which was 20 μm deep, but which was reduced in width at each bifurcation (40, 30, 25, 20, and 10 μm) and then increased in width (20, 25, 30, 40 μm). Again sperm migrated to the center of the fractal channel.

The bi-directional motility of a sperm sample was also examined. A channel (60 and 80 μm wide, 20 μm deep) and fractal channels were filled with HTF-BSA medium and semen introduced simultaneously via the holes at each end of the channel. Sperm were observed migrating towards the center of the channel (or fractal channel) and eventually passing as they migrated towards the hole at the opposite end of the channel.

An inclined channel experiment was also performed on a sperm sample. A channel (60 μm wide, 20 μm deep) was filled with HTF-BSA medium and a sample of sperm applied to the inlet hole. The inlet and outlet holes were sealed with adhesive tape. The chip was inclined at 45° for different periods of time and then the progression of the sperm up the channel determined visually. Sperm were found to migrate efficiently up the inclined channel and could be seen in the exit hole at the top of the channel.

Example 6

An experiment testing different spermicides using a mesoscale flow system was conducted. A chip comprising two chambers (5.2 mm long, 750 μm wide, 1.5 mm deep) each linked at each end to an entry hole by a channel (3.25 mm long, 100 μm wide, 20 μm deep) was used for the simultaneous testing of the spermicidal activity of nonoxynol-9 and C13-G (Biosyn, Inc., PA). The four channels were filled with HTF-BSA solution (channel #1, control), 0.005% (channel #2), 0.0125% (channel #3), and 0.05% (channel #4) nonoxynol-9 (or C13-G), respectively. A sample of semen was placed in each chamber and the progress of sperm into the adjoining

channels monitored using the microscope. The number of sperm observed in the channels was in the following order of decreasing sperm count: channel #1> #2> #3> #4. Most sperm were seen in the control channel, and none were seen in channel #4 which contained nonoxynol-9 or C13G at the optimum concentration for spermicidal action.

Example 7

A morphological examination of motile sperm was conducted in a mesoscale flow system. A chip comprising two chambers (5.2 mm long, 750 μm wide, 1.5 mm deep) each linked at each end to an entry hole by a channel (3.25 mm long, 100 μm wide, 20 μm deep) was used. The channels were filled with HTF-BSA solution and a semen sample applied to the central chamber. The chip was placed in a moist environment for 10 minutes. The surface solution from the holes at each end of the chip was removed and placed on a glass microscope slide (previously washed with ethanol). The slide was dried at 40°C then stained using Wright Giemsa stain (Curtin Matheson Scientific, Inc., Houston, TX). The sperm which had migrated from the central chamber to the end of the channel and into the hole had a normal morphological appearance.

Example 8

The interaction of a sperm sample with cervical mucus in a mesoscale flow system was tested in a chip comprising two chambers (5.2 mm long, 750 μm wide, 1.5 mm deep) each linked at each end to an entry hole by a channel (3.25 mm long, 100 μm wide, 20 μm deep). The

channels were filled with HTF-BSA solution and a cervical mucus sample (collected at approximately day 14 of the patient's menstrual cycle) placed in each of the central chambers. Sperm did not migrate into the cervical mucus and those that penetrated died, as anticipated because cervical mucus is known to be hostile to sperm at this time during the menstrual cycle. Moghissi et al., Am. J. Obstet. Gynecol., 114:405 (1972).

Example 9

A test of the interaction of hyaluronic acid with a sperm sample was conducted to assess the cervical interaction of a sperm sample. The test was conducted in a chip comprising two chambers (5.2 mm long, 750 μm wide, 1.5 mm deep) each linked at each end to an entry hole by mesoscale flow Channels #1, #2, #3 and #4 (3.25 mm long, 100 μm wide, 20 μm deep). Channel #1 was a control channel. Channels were filled with HTF-BSA solution and solutions of hyaluronic acid (Sigma) in HTF-BSA (channels #2, #3, #4, 5 mg/mL, 2.5 mg/mL, and 1.3 mg/mL, respectively). A semen sample was placed in each of the central chambers. Sperm did not migrate into channel #2, containing 5 mg/mL hyaluronic acid, but the extent of migration increased as the concentration of hyaluronic acid decreased in channels #3 and #4.

Example 10

An immunobead test for the presence of IgG antibodies in a sperm sample was conducted. Immunobeads (BioRAD, Richmond, CA), microbeads coated with an antibody to human IgG, were diluted to 1 mg/mL

in HTF-BSA solution (Irvine Scientific, Santa Ana, CA). A microchannel (250 μm wide, 20 μm deep, and 10 mm long) in a glass-silicon chip was filled with a sample of the immunobead solution and a semen sample (ca 1.2 μL) was applied to the channel entry. Agglutination of sperm by the immunobeads due to the presence of antibodies in the sperm sample was observed in the channel. As a control, the experiment was performed on a glass microscope slide using larger volumes of the immunobead reagent and semen sample, and this was also positive (agglutination observed).

AUSTRALIAN PATENT OFFICE

The claims defining the present invention are as follows:

1. A device for in vitro fertilisation, the device comprising:
a solid substrate microfabricated to define:
an egg nesting chamber;
a sperm inlet port; and
an elongate channel containing a sperm medium, at least a portion of said channel having a cross-sectional dimension of about 0.1 to 500μm, and said channel communicating between said egg nesting chamber and said sperm inlet port, which permits competitive sperm migration from said inlet port to said nesting chamber for egg fertilisation.

2. The device of claim 1, wherein said channel comprises a branching structure.

3. The device of claim 1 or claim 2, wherein said device includes a plurality of said mesoscale channels.

4. The device of claim 3, wherein each of said channels are of equal length.

5. The device of any one of claims 1 to 4 wherein said elongate channel comprises a primary channel and a fractal region comprising bifurcations leading to plural secondary channels.

6. The device of claim 5 wherein said secondary channels in said fractal region have a reduced cross-sectional area relative to said primary channel.

7. The device of any one of the preceding claims wherein said sperm medium is selected from the group consisting of mammalian tubal fluid, cervical mucus, and a buffer.

8. The device of any one of the preceding claims wherein said elongate channel is tortuous.

DATED this 6th day of March 1997

TRUSTEES OF THE UNIVERSITY OF PENNSYLVANIA
By Its Patent Attorneys
DAVIES COLLISON CAVE

AUSTRALIAN PATENT OFFICE

9. The device of any one of the preceding claims, further comprising means for expelling an egg in said nesting chamber from said substrate.

10. The device of claim 9, wherein said means for expelling comprises hydraulic expulsion means.

11. The device of any one of the preceding claims, further comprising means defining an optical path through said device to said egg nesting chamber, to permit visual observation of said egg.

12. The device of any one of the preceding claims, wherein said solid substrate is microfabricated to define a sperm deposit reservoir in communication with said inlet port.

13. The device of any one of the preceding claims, further comprising filter means disposed between said inlet port and said nesting chamber.

14. The device of any one of the preceding claims, further comprising a reservoir of buffer, in fluid communication with said channel, for diminishing dehydration withing said substrate.

15. A device for analysing a sperm sample, comprising:

a solid substrate microfabricated to define:

a sperm sample inlet port; and

a mesoscale channel system comprising:

a tortuous channel, in communication with said inlet port, and containing a sperm medium, at least a portion of said tortuous channel having a cross-sectional dimension of about 0.1 to 500 μm; and

means for detecting the migration of the sperm through said system.

16. The device of claim 15, wherein said channel system comprises a primary channel, in communication with said inlet port, and bifurcations leading to plural secondary channels.

17. The device of claim 16, wherein said secondary channels have a reduced cross-sectional area relative to the primary channel.

18. The device of any one of claims 15 to 17, wherein a channel in said substrate is disposed at an angle with respect to a horizontal plane.

19. The device of any one of the preceding claims, wherein said solid substrate comprises microfabricated silicon.

20. The device of any one of the preceding claims, further comprising an appliance for use in combination with said substrate, said appliance comprising:

means for holding said substrate;

fluid input means interfitting with an inlet port on said substrate; and

pump means for delivering fluid to a channel in said substrate when it is held in said holding means.

21. The device of any one of the preceding claims, further comprising an appliance for use in combination with said substrate, said appliance comprising:

means for holding said substrate; and

optical means for viewing the contents of said mesoscale channel system in said substrate.

22. The device of claim 21, wherein said optical means comprises magnifying optics and a video camera, and wherein said appliance further comprises:

a tilt mechanism for manually adjusting the angle and location of the device; and

a video screen for viewing the contents of said channel system.

23. The device of any one of the preceding claims wherein, within at least a portion of a said channel, the channel width and channel depth each are between 0.1 μm and 500 μm.

24. The device of claim 23 wherein the channel width in said portion is between 2.0 and 300 μm.

25. The device of claim 23 or claim 24 wherein the channel depth in said portion is between 0.1 and 100 μm.

26. A method for the in vitro fertilisation of an egg comprising:

(i) providing a device including a solid substrate microfabricated to define:

an egg nesting chamber;

a sperm inlet port; and

an elongate channel, at least a portion of said channel having a cross-sectional dimension of about 0.1 and 500 μm, and said channel containing a sperm medium and communicating between said egg nesting chamber and said sperm inlet port, which permits competitive sperm migration from said inlet port to said nesting chamber for egg fertiiisation;

(ii) placing an egg in said nesting chamber;

(iii) applying a sperm sample to said inlet port; and

(iv) allowing said sperm to competitively migrate from said inlet port through said channel to said egg in said nesting chamber.

27. The method of claim 26, wherein said elongate channel comprises a branching channel; and

wherein, in step (iv), said sperm sample is allowed to competitively migrate through said branching channel.

28. The method of claim 27, wherein said branching channel comprises a fractal region; and

wherein, in step (iv), said sperm sample is allowed to competitively migrate through said fractal region.

29. The method of any one of claims 26 to 28 further comprising:

(v) expelling said egg from said chamber with expulsion means.

30. The method of claim 29, wherein said expulsion means comprises a hydraulic expulsion means; and

wherein, in step (v), said egg is expelled from said chamber in said substrate with said hydraulic expulsion means.

31. The method of claim 29 or claim 30 further comprising:

visually observing said egg chamber to determine, prior to step (v), the fertilisation of said egg in said chamber.

32. A method for analysing a sperm sample, comprising:

(i) providing a device including:

a solid substrate microfabricated to define:

a sperm sample inlet port; and

a mesoscale channel system, containing a sperm medium, and comprising a primary channel extending from said inlet port, at least a portion of said primary channel having a cross-sectional dimension of about 0.1 to 500 μm;

(ii) applying a sperm sample to said inlet port; and

(iii) detecting the migration of sperm from said inlet port through said channel.

33. The method of any one of claims 26 to 31 wherein at least a portion of said elongate channel comprises a tortuous channel.

34. The method of claim 32 wherein at least a portion of said mesoscale channel system comprises a tortuous channel.

FIG. 1

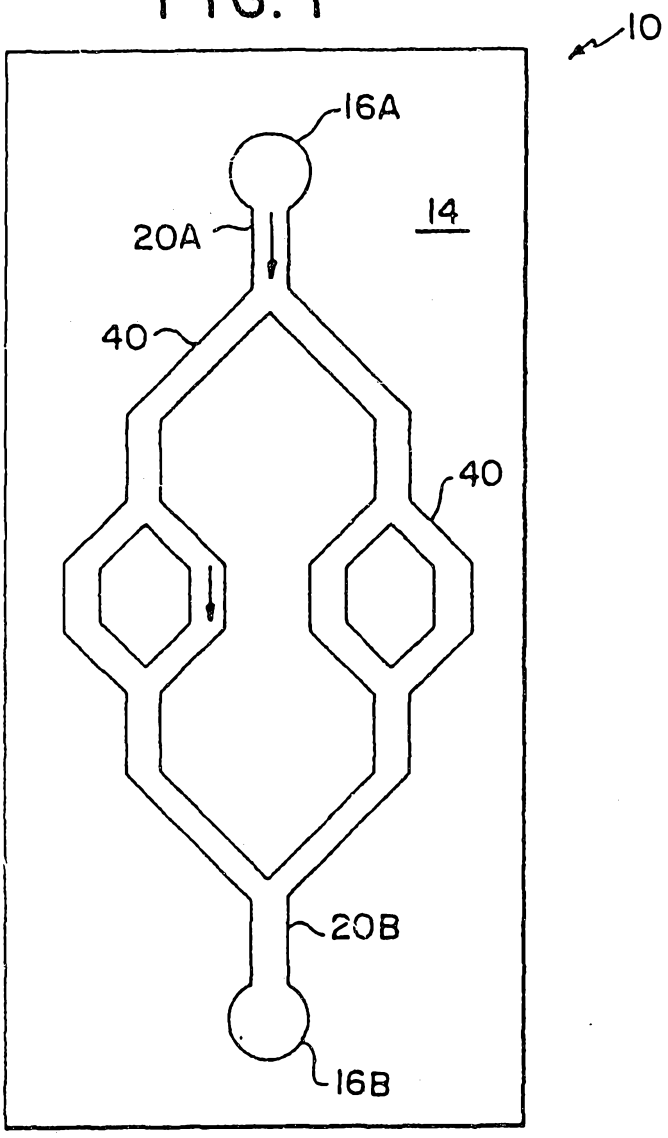

FIG. 2

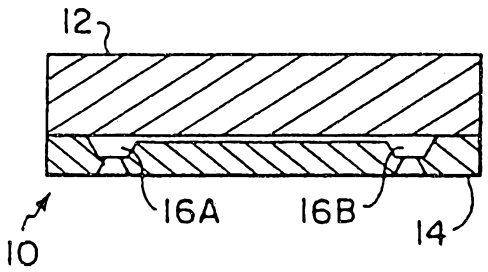

FIG. 3

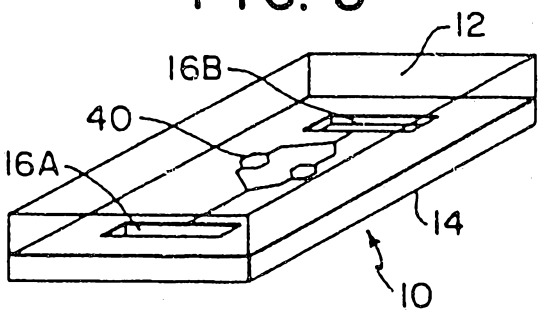

FIG. 4

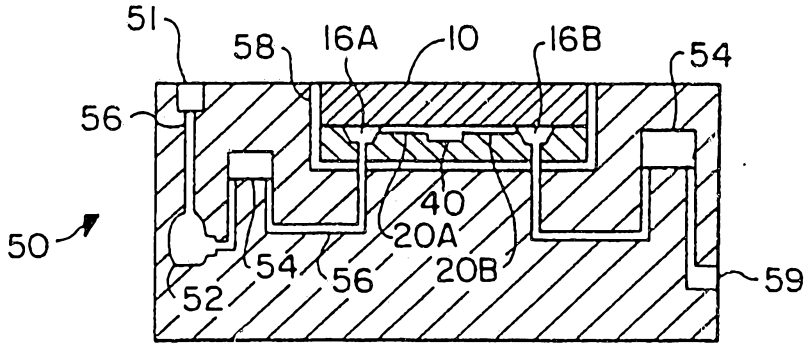

FIG. 5

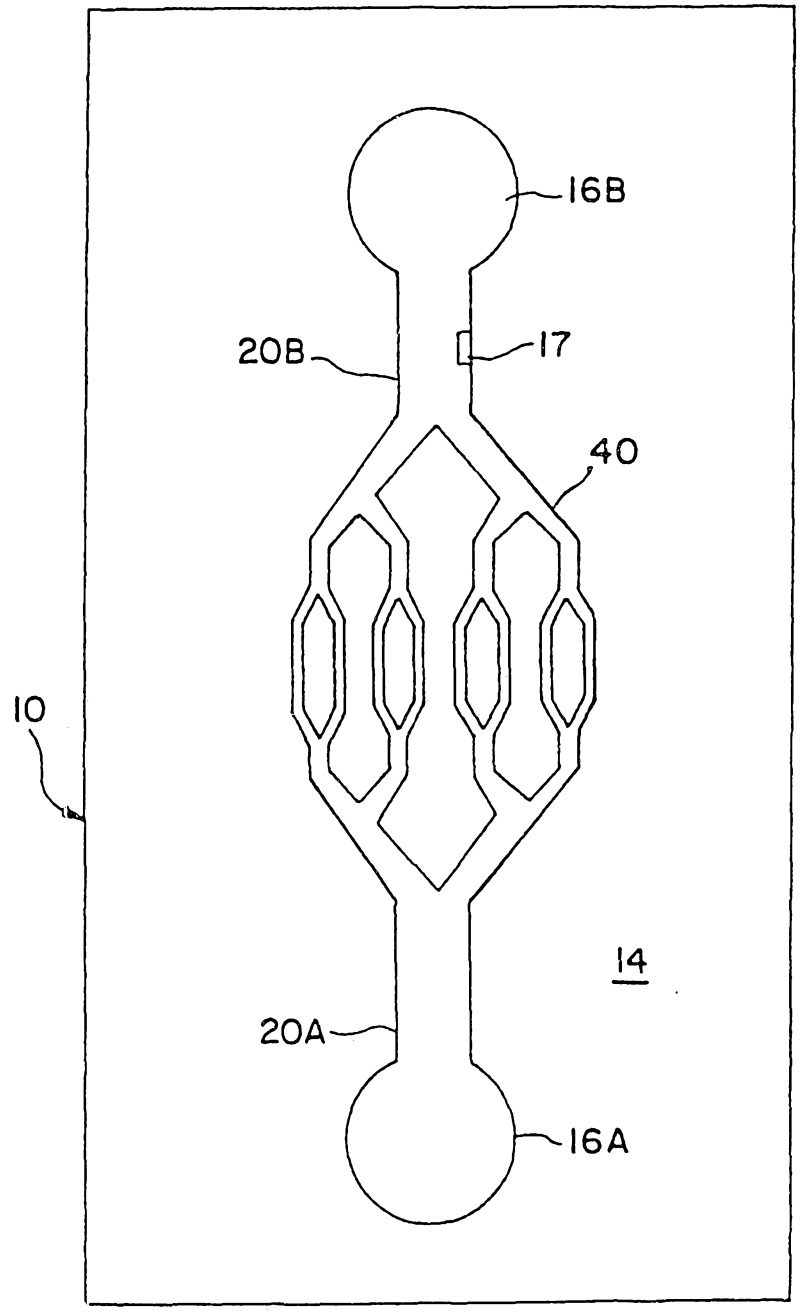

FIG. 6

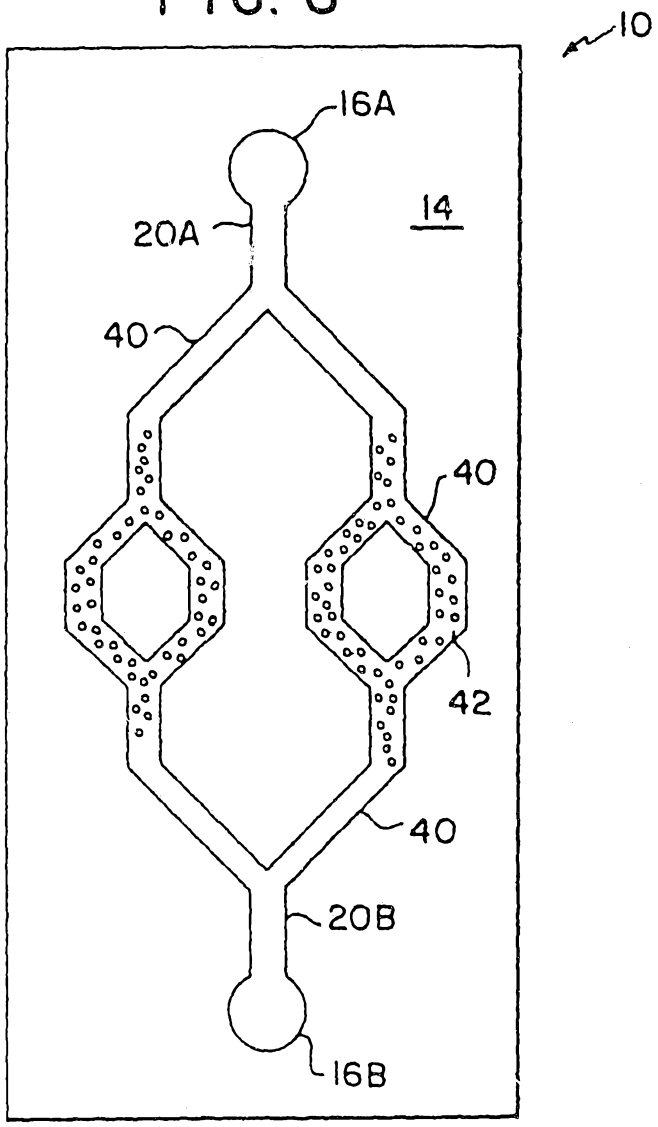

FIG. 7

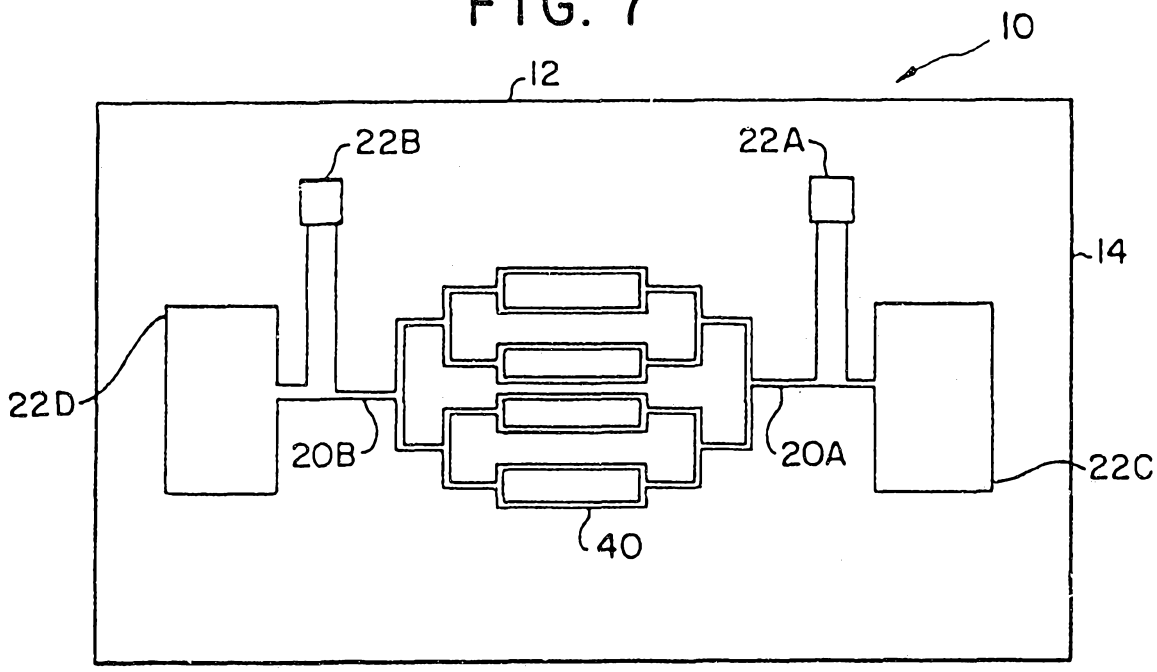

FIG. 8

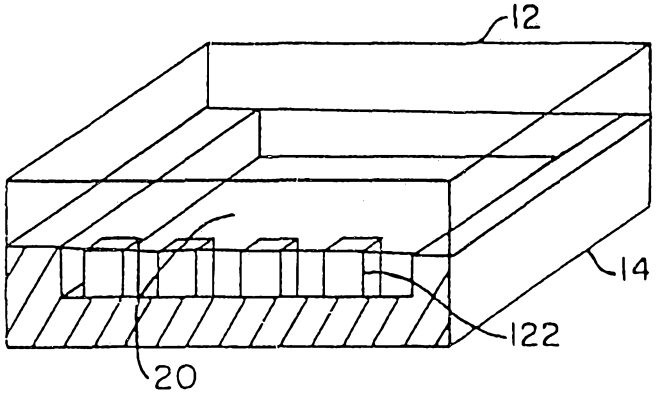

FIG. 9

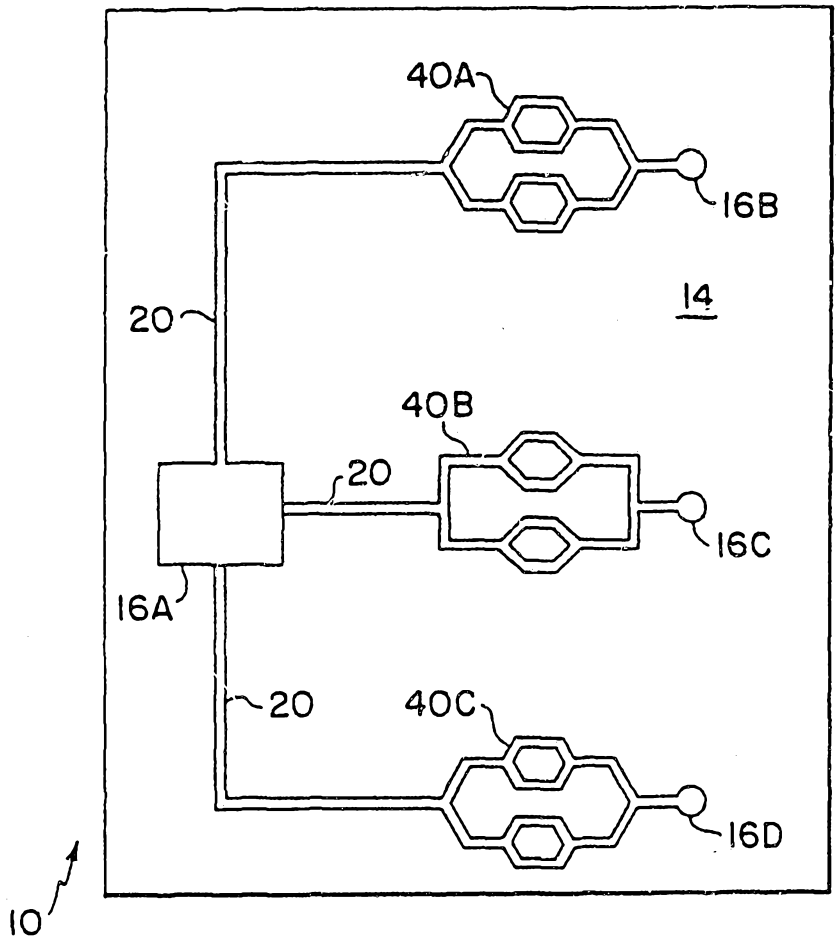

FIG. 10

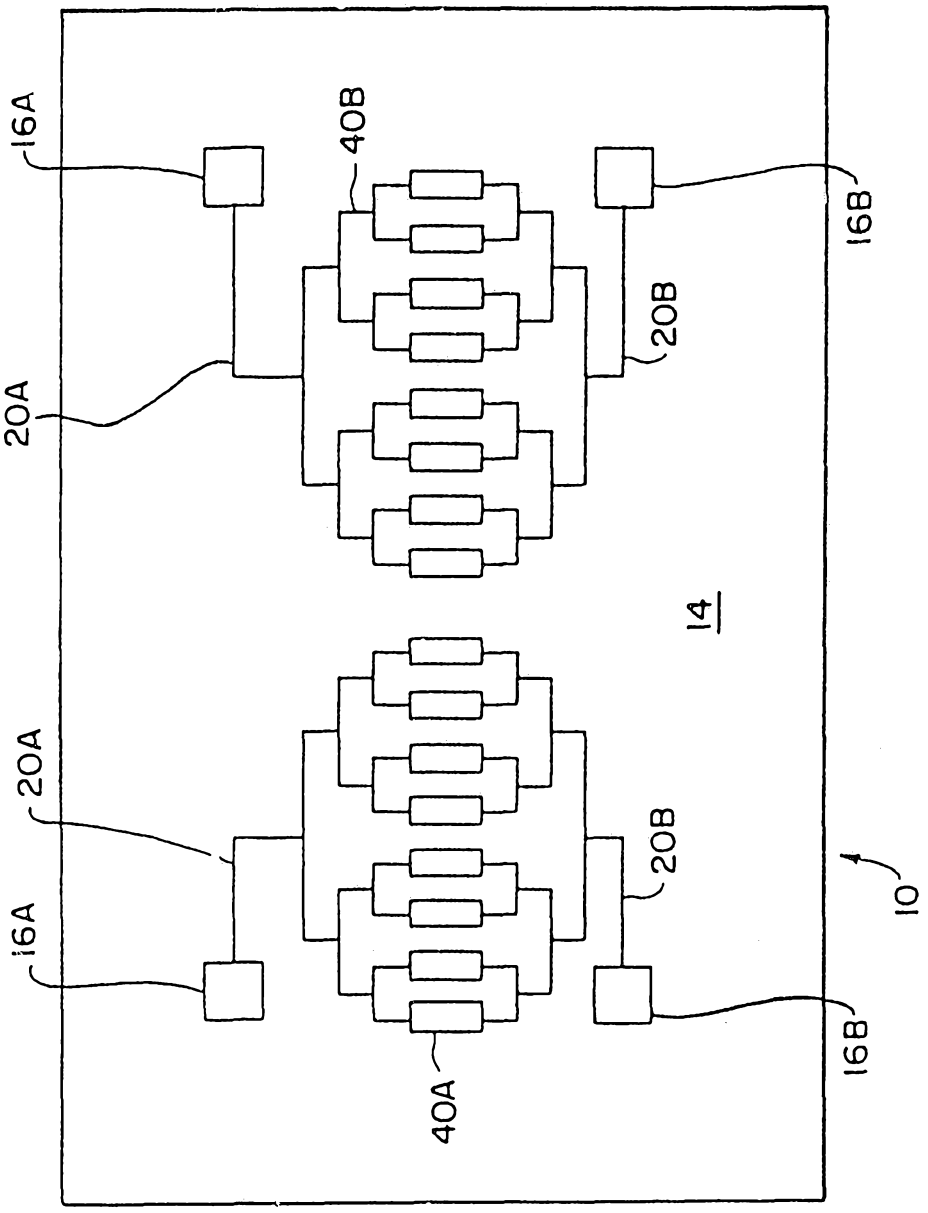

FIG. 12

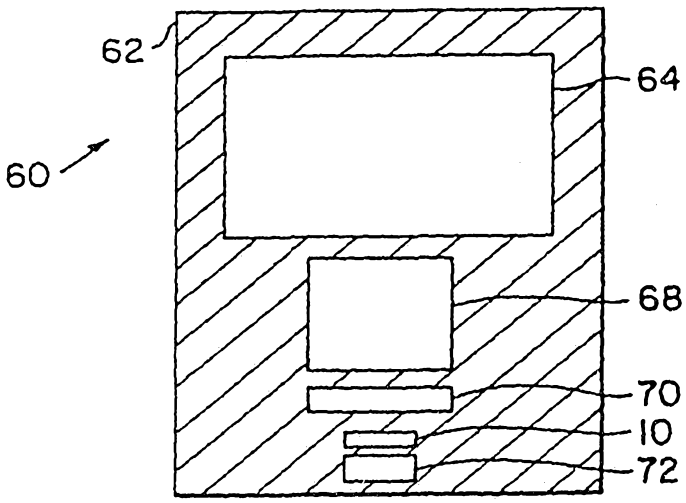

FIG. 11

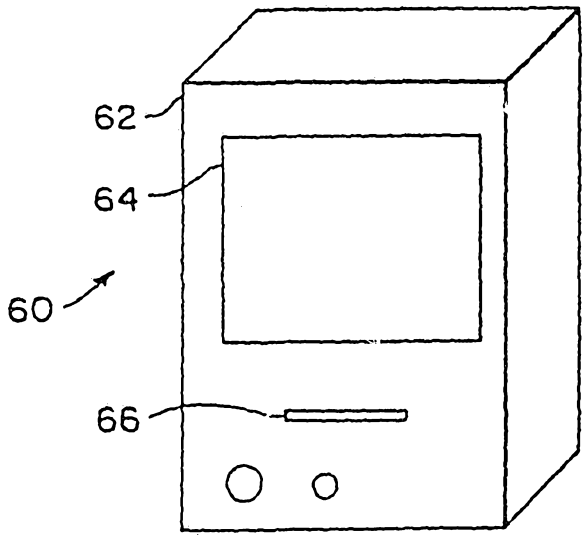

FIG. 13

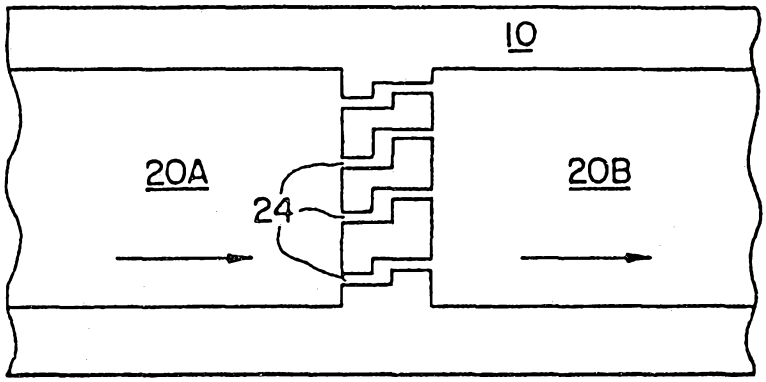

FIG. 14

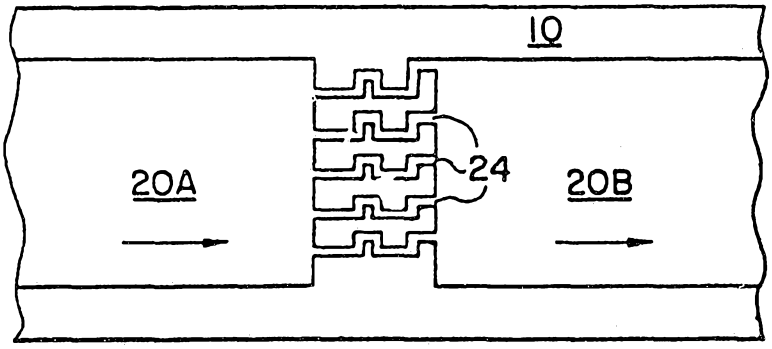

FIG. 15

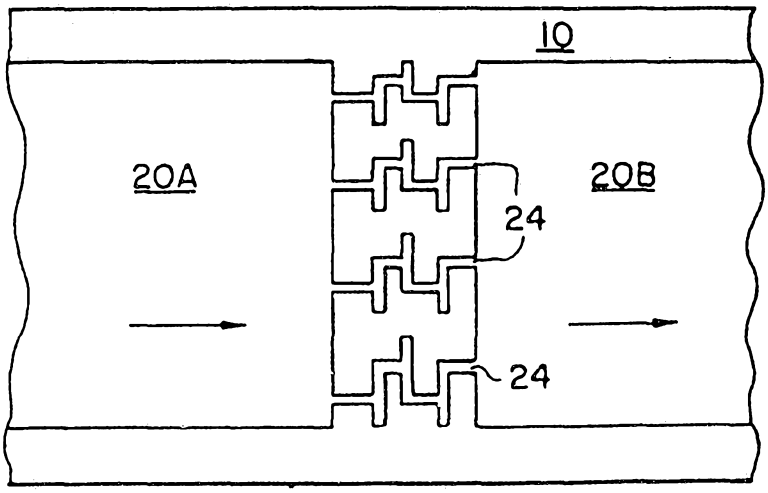

INTERNATIONAL SEARCH REPORT

International Application No PCT/US 93/04017

I. CLASSIFICATION OF SUBJECT MATTER (if several classification symbols apply, indicate all)[6]

According to International Patent Classification (IPC) or to both National Classification and IPC

Int.Cl. 5 C12M3/00; B01L3/00; C12M1/34

II. FIELDS SEARCHED

Minimum Documentation Searched[7]

Classification System	Classification Symbols
Int.Cl. 5	C12M ; B01L ; A61K

Documentation Searched other than Minimum Documentation to the Extent that such Documents are Included in the Fields Searched[8]

III. DOCUMENTS CONSIDERED TO BE RELEVANT[9]

Category °	Citation of Document,[11] with indication, where appropriate, of the relevant passages[12]	Relevant to Claim No.[13]
A	1987 IEEE INDUSTRY APPLICATIONS SOCIETY ANNUAL MEETING no. 2, 18 October 1987, ATLANTA (US) pages 1549 - 1553 MASUDA ET AL. 'novel method of cell fusion in field contriction area in fluid integrated circuit' cited in the application see page 1549, column 1, paragraph 2 - line 1-3 see page 1551, column 1, paragraph 4 - column 2; figures 2-3 see page 1553, paragraph 5.1	1
A	database biosis an=71093341 ' Role of sperm passage through cervical mucus . . .' K.Ikuma et al. Acta Obst.Gyn.Jp. V41,N2,P167-172, 1989	1,6-7,25

-/--

° Special categories of cited documents :[10]

"A" document defining the general state of the art which is not considered to be of particular relevance

"E" earlier document but published on or after the international filing date

"L" document which may throw doubts on priority claim(s) or which is cited to establish the publication date of another citation or other special reason (as specified)

"O" document referring to an oral disclosure, use, exhibition or other means

"P" document published prior to the international filing date but later than the priority date claimed

"T" later document published after the international filing date or priority date and not in conflict with the application but cited to understand the principle or theory underlying the invention

"X" document of particular relevance; the claimed invention cannot be considered novel or cannot be considered to involve an inventive step

"Y" document of particular relevance; the claimed invention cannot be considered to involve an inventive step when the document is combined with one or more other such documents, such combination being obvious to a person skilled in the art.

"&" document member of the same patent family

IV. CERTIFICATION

Date of the Actual Completion of the International Search	Date of Mailing of this International Search Report
26 AUGUST 1993	10 SEP 1993
International Searching Authority	**Signature of Authorized Officer**
EUROPEAN PATENT OFFICE	HOCQUET A.P.

III. DOCUMENTS CONSIDERED TO BE RELEVANT (CONTINUED FROM THE SECOND SHEET)

Category °	Citation of Document, with indication, where appropriate, of the relevant passages	Relevant to Claim No.
X	EP,A,0 439 893 (UNITED MEDICAL SYSTEMS) 7 August 1991 see page 3, line 21 - line 28 see page 6, line 5 - line 17	17,23
A	WO,A,9 116 966 (PHARMACIA BIOSENSOR AB) 14 November 1991 see page 1, line 19 - line 20 see page 1, line 30 - line 35 see page 2, line 1 - line 8 see page 2, line 27 - line 31	17
A	GB,A,2 131 972 (BEN ZION HAI BUMS) 27 June 1984 see page 1, column 56 - column 65; figures	17
A	US,A,4 911 782 (J.F.BROWN) 27 March 1990 see column 2, line 43 - line 65; figures 1-3 see column 5, line 23 - line 32; figures 4-6 see column 6, line 31 - line 57; figures 4-6	1,17
A	FERTILITY AND STERILITY vol. 27, no. 6, 1976, pages 677 - 684 LOPATA ET AL. 'a method for collecting motile spermatozoa from human semen' see page 682, column 1, last paragraph	1,6,7, 17,25
A	GB,A,2 220 003 (FU-NAN WANG) 28 December 1989 see page 12 ,items 4 and 7 see figures 1,6 see page 14; figure 6	1,17,20
A	see page 10, line 10 - line 13; claim 8	10

ANNEX TO THE INTERNATIONAL SEARCH REPORT ON INTERNATIONAL PATENT APPLICATION NO.

US 9304017
SA 73832

This annex lists the patent family members relating to the patent documents cited in the above-mentioned international search report. The members are as contained in the European Patent Office EDP file on
The European Patent Office is in no way liable for these particulars which are merely given for the purpose of information. 26/08/93

Patent document cited in search report	Publication date	Patent family member(s)		Publication date
EP-A-0439893	07-08-91	AU-B-	635741	01-04-93
		AU-A-	5623290	04-07-91
WO-A-9116966	14-11-91	EP-A-	0527905	24-02-93
		SE-A-	9001699	11-11-91
GB-A-2131972	27-06-84	None		
US-A-4911782	27-03-90	US-A-	5200152	06-04-93
GB-A-2220003	28-12-89	DE-A-	3904889	23-08-90
		FR-A-	2638323	04-05-90

EPO FORM P0479