Innovation, Sciences et Développement économique Canada
Office de la Propriété Intellectuelle du Canada

Innovation, Science and Economic Development Canada
Canadian Intellectual Property Office

CA 2982013 A1 2018/04/13

(21) 2 982 013

(12) DEMANDE DE BREVET CANADIEN
CANADIAN PATENT APPLICATION

(13) A1

(22) Date de dépôt/Filing Date: 2017/10/11

(41) Mise à la disp. pub./Open to Public Insp.: 2018/04/13

(30) Priorité/Priority: 2016/10/13 (US15/293,027)

(51) Cl.Int./Int.Cl. *F16L 59/16* (2006.01), *F16L 3/00* (2006.01)

(71) Demandeur/Applicant:
ALLAIRE, JOHN, CA

(72) Inventeur/Inventor:
ALLAIRE, JOHN, CA...

(74) Agent: PERLEY-ROBERTSON, HILL & MCDOUGALL LLP

(54) Titre : INSERTION ISOLANTE DE TUYAU
(54) Title: PIPING INSULATION INSERT

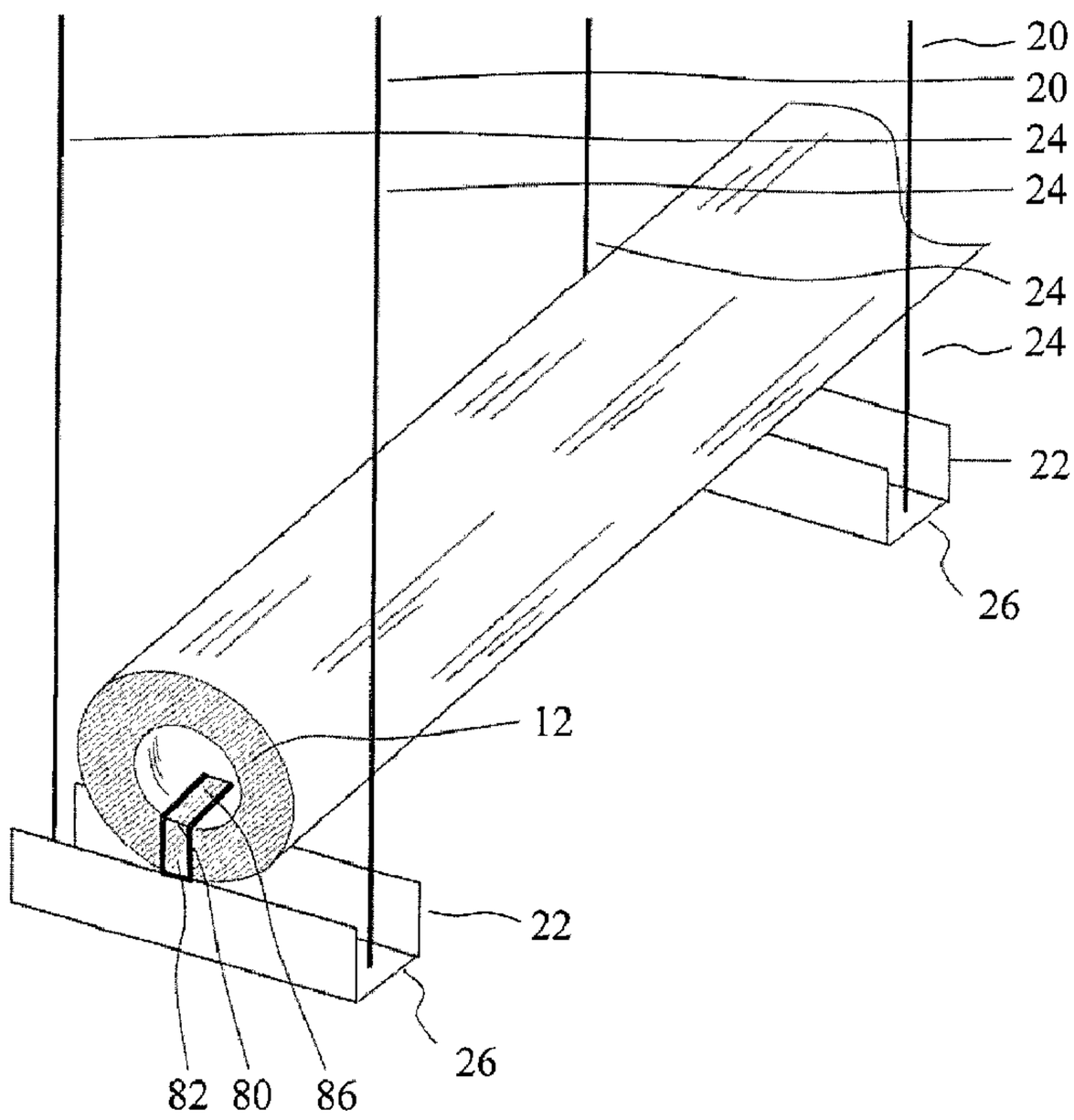

(57) Abrégé/Abstract:
The invention provides a piping insulation insert that may be inserted in a cut-away portion of insulation wrapping a pipe, wherein the piping insulation insert supports the weight of the pipe against a system by which the insulated pipe is suspended and

(57) Abrégé(suite)/Abstract(continued):
supported. The insert comprises: a length of unistrut having a u-shaped cross-sectional profile, wherein: the exterior surface of the u-shaped unistrut is covered with a first insulating material; a volume defined by the interior surface and the two upper edges of the u-shaped unistrut is packed with a second insulating material; and the two upper edges of the u-shaped unistrut are covered with the first insulating material.

ABSTRACT

The invention provides a piping insulation insert that may be inserted in a cut-away portion of insulation wrapping a pipe, wherein the piping insulation insert supports the weight of the pipe against a system by which the insulated pipe is suspended and supported. The insert comprises: a length of unistrut having a u-shaped cross-sectional profile, wherein: the exterior surface of the u-shaped unistrut is covered with a first insulating material; a volume defined by the interior surface and the two upper edges of the u-shaped unistrut is packed with a second insulating material; and the two upper edges of the u-shaped unistrut are covered with the first insulating material.

TITLE: PIPING INSULATION INSERT

FIELD OF INVENTION

This invention relates to a piping insulation insert, and more particularly to an insulated support insert for use in installation of suspended pipe or ductwork.

BACKGROUND TO THE INVENTION

Piping or ductwork is used to move a liquid or gas from one site to another. Often the liquid or gas is either heated or chilled, relative to the surroundings of the piping or ductwork, and the piping or ductwork is insulated by surrounding insulation to help maintain the temperature of the liquid or gas within the piping or ductwork and minimize the transfer of heat between the interior and the exterior of the piping or ductwork. For the sake of brevity, the term "piping" will be used throughout this specification to refer to both piping and ductwork.

In a construction, such as a building, piping is often suspended via a system of supports. So long as the piping is adequately insulated, heat transfer between the liquid or gas within the piping and the individual supports within the system of supports is minimized. However, piping can often be heavy when it is carrying liquid or gas, and unwanted heat transfer can occur when insulation is compressed between piping and the underlying supports in the system of supports.

One way of minimizing this heat transfer is to use insulation that is minimally compressible, but this is easier said than done. For example, in the past, asbestos-containing plaster-type insulation was used to coat pipes. This type of insulation was fairly robust and minimally compressible, but it is now known that asbestos is a health hazard and its use is avoided. Calcium silicate is not really an adequate alternative to asbestos for use as weight-bearing insulation since it will become brittle and fail over time. Minimally compressible foam insulation has been found to be an inadequate form of weight-bearing insulation for long-term use since it too will deteriorate over time, become brittle, and eventually crack.

One solution has been to remove a piece of the insulation that surrounds the pipe between the pipe and the underlying support by cutting away a small block of insulation and inserting in its

place a small piece of stronger material. The small piece of stronger material sits in the recess cut away from the insulation such that the small piece bears the weight of piping on the underlying support. However, with the removal of the piece of insulation, heat can transfer directly from the piping, through the small piece of stronger material to the underlying support.

If the material being transported in the piping is colder than the temperature of the surroundings, the transported material will become less cold and the underlying support will become more cold, thereby encouraging water condensation on the underlying support. This water condensation will migrate to the insulation and drop on any structure underneath the underlying support, which will encourage undesirable rot of the structure underneath and mold growth in the insulation. Over time, if water condensation continues, the small piece of stronger material and the underlying support may rot, or corrode if made of metal.

If the material being transported in the piping is warmer than the temperature of the surroundings, the transported material will lose heat through the stronger piece of material to the underlying support. Over time, this heat transfer may weaken the small piece and the underlying support and cause one or both to fail. If the heat transfer is significant enough, it may even be a fire hazard or at least be a hazard to a person who touches the underlying support or a structure close to the underlying support.

Others have attempted to implement the solution of using a small block of stronger material by using a wood block as the small piece of stronger material. Commercial examples have been made by Buckaroos Inc. of Indianapolis, Indiana, USA as wooden blocks and dowels. However, wood can fail. Piping carrying a liquid such as chilled or heated water can be heavy, especially if the length of piping is significant, the gauge of the piping is thick, the cross-sectional area of the piping is large and/or the piping is made of a heavy material, such as a metallic material. Wood will not necessarily stop condensation and can become wet in this application. Over time, wet wood will rot and fail under a heavy load. If wood is heated, it will dry out and can become brittle. Brittle wood will also fail over time and if heated, over time, may be a combustion hazard. Another drawback to wood is that it is not a consistent product – the strength, compressibility and density of wood can vary with the species of tree and growing conditions of

where the tree was raised. The ability of wood to be consistently strong and insulative cannot be predicted or measured.

Another commercial solution made by Buckaroos Inc. is a molded fiberglass insulation block; however, the molded fiberglass insulation block may not be an adequate solution. If the piping is heavy, the block can deform, crack and eventually fail.

What is needed is a piping insulation insert that is strong, rigid and insulative in a consistent, predictable and measurable manner.

SUMMARY OF THE INVENTION

According to one aspect of the present invention, there is provided a piping insulation insert comprising: a length of unistrut having a u-shaped cross-sectional profile in a face perpendicular to the length of the u-shaped unistrut, wherein the u-shaped unistrut is formed of a rigid material and comprises a base portion and two arm portions extending upwardly therefrom to form the u-shaped cross-sectional profile, the base and arm portions defining an interior and an exterior surface of the u-shaped unistrut with each of the interior and exterior surfaces extending the length of the u-shaped unistrut, and two upper edges of the u-shaped unistrut defined by end points of each of the two arm portions furthest away from the base portion, each of the two upper edges extending the length of the u-shaped unistrut with each of the two upper edges separating the interior surface from the exterior surface, wherein: the exterior surface of the u-shaped unistrut is covered with a first insulating material; a volume defined by the interior surface and the two upper edges of the u-shaped unistrut is packed with a second insulating material; and the two upper edges of the u-shaped unistrut are covered with the first insulating material.

In one embodiment, there is provided the piping insulation insert described herein wherein the rigid material is metallic.

In another embodiment, there is provided the piping insulation insert described herein wherein the first insulating material is the same as the second insulating material.

In yet another embodiment, there is provided the piping insulation insert described herein wherein the first insulating material and the second insulating material is an elastomeric foam insulation.

In still another embodiment, there is provided the piping insulation insert described herein wherein the first insulating material is different from the second insulating material.

In a further embodiment, there is provided the piping insulation insert described herein wherein the first insulating material is an insulating fabric made of plain weave high temperature treated fiberglass and the second insulating material is high temperature mineral wool insulation.

BRIEF DESCRIPTION OF THE DRAWINGS

Figure 1 is a perspective view, partially in cross section, of a length of insulated piping supported by two pieces of suspended unistrut support (Prior Art).

Figure 2 is a side elevational view of one of the pieces of unistrut support shown in Figure 1 (Prior Art).

Figure 3 is a perspective view of a piece of insulation used to coat a length of piping (Prior Art).

Figure 4 is a perspective view of an embodiment of the piping insulation insert of the present invention, partially assembled.

Figure 5 is a perspective view of a fully assembled embodiment of the piping insulation insert of the present invention.

Figure 6 is a perspective view of a fully assembled embodiment of the piping insulation insert of the present invention that is different than the embodiment shown in Figure 5.

Figure 7 is a perspective view of a piece of insulation used to coat a length of pipe with a piece cut away for installation of the piping insulation insert of the present invention.

Figure 8 is a perspective view, partially in cross section, of a length of insulated piping in which the piping insulation insert of the present invention has been inserted, supported by two pieces of suspended unistrut support.

Figure 9 is a front elevational view, in cross-section, of the supported length of insulated piping seen in Figure 8.

DETAILED DESCRIPTION OF THE INVENTION

Figure 1 illustrates an example of a length of piping, surrounded by insulation, and suspended via a system of supports. In this example, a single length of pipe **1** is surrounded by a layer of insulation **10**, and the system of supports **20** consists of multiple pieces of rigid unistrut **22**, each of which is suspended by two threaded metal rods **24**. Each piece of unistrut **22** is made of a rigid material, such as steel or aluminum, and has a u-shaped cross-sectional profile, as shown in Figure 2, with a lower base portion **26** and two arm portions **28** extending upwardly therefrom. Each of the two arm portions **28** terminates at an upper edge **30**.

In the example of Figure 1, each piece of unistrut **22** is suspended from two threaded metal rods **24** which protrude from two holes (not shown) placed through the base portion **26** of unistrut **22**, with one hole toward each end of unistrut 22. Each threaded rod **24** is secured to unistrut **22** by two nuts (not shown), one above the base portion **26** of unistrut **22**, and one below the base portion **26** of unistrut **22**.

In the example of Figure 1, a single length of pipe **1**, surrounded by a layer of insulation **10**, is suspended from the system of supports **20**, but in constructions multiple lengths of pipe **1**, each of which is surrounded by a layer of insulation **10**, may be suspended from the system of supports **20**, by longer pieces of unistrut **22** and laying the multiple lengths of pipe **1** side-by-side. Although each length of pipe **1** is often heavy enough to be held in place along the length of unistrut **22** through the force of gravity, each length of pipe **1** may sit within a concave saddle or shield (not shown).

The person skilled in the art will be familiar with other methods of suspending insulated pipe, but the method of the example shown in Figure 1 is illustrative of the problem presented earlier. The weight of pipe **1** will place a compressive force between the underside thereof and the underlying system of supports **20** (in the example shown in Figure 1, at the upper edge of unistrut **22**). In the example shown in Figure 1 the layer of insulation **10** is not shown to be compressed because the layer of insulation **10** is a minimally compressible layer of asbestos-

containing plaster-type insulation that was used in the past. As discussed previously, insulation that is used in modern piping systems is compressible, and compressible insulation loses effectiveness when compressed.

Insulation for piping can come in preformed sections. Figure 3 illustrates an example of such a preformed section **12**. Section **12** takes the form of a tube with a hollow core **18** surrounded by a layer of insulation **14**. Section **12** is sliced open along its length so that it may be placed around a length of piping so that the length of piping sits in the hollow core **18**. Section **12** is manufactured so that the diameter of hollow core 18 matches that of the diameter of piping to be insulated. The portion of the layer of insulation **14** that may be subject to compression when piping is suspended as discussed above is shown at **16**. As discussed above, a piece of the insulation that surrounds the pipe and the underlying support in this region may be removed and replaced with a small piece of stronger material. This small piece of stronger material is referred to herein as a piping insulation insert, and the piping insulation insert of the present invention will now be described.

The underside of a section of insulation from which a portion has been cut away is shown in Figure 7. Cut out portion **50** is seen on the underside **52** of section **12**. Cut out portion **50** extends through the layer of insulation **14**, exposing hollow core **18**. The piping insulation inset of the present invention is sized to match the size of cut out portion **50**.

The piping insulation insert of the present invention is formed from a length of unistrut **62**, as shown in Figure 4. The unistrut **62** may be made of the same material as unistrut **22** of the system of supports **20** in Figure 1, however, unistrut 62 may be sized differently, for the reasons discussed below, in order that the piping insulation insert of the present invention be sized to match the size of cut out portion **50**.

Unistrut **62** is made of a rigid material that will support the weight of piping 1 when resting in system of supports **20**. Rigid material should be durable so that it will maintain its integrity over time while under weight-bearing load. In one embodiment, unistrut **62** is made of metal, such as steel or aluminum. Unistrut 62 is u-shaped, when viewed in cross-section, with lower base **66** and two arms **68** projecting upwardly therefrom. In the embodiment shown in Figure 4, base **66**

is flat, but base **66** may also have a convex bend to match that of the saddle of the system of support in which the insulated piping is to rest and the radius of preformed section of insulation **12**. Each upwardly projecting arm **68** terminates at the upper end thereof, forming two upper edges **70** running along the length of unistrut **62**. Unistrut **62** has an interior surface **72**, and an exterior surface **74**, with the two upper edges **70** being the borders between the interior surface **72** and the exterior surface **74**. When u-shaped unistrut **62** is viewed in cross-section, interior surface 72 is the inside surface of the "u", and exterior surface **74** is the outside surface of the "u".

One embodiment of the piping insulation insert of the present invention is shown in Figure 5 and a second embodiment of the piping insulation insert of the present invention is shown in Figure 6.

In each of these two embodiments, the piping insulation insert is formed by applying insulation to unistrut **62**. Exterior surface **74** is wrapped with a first insulating material. A sheet of the first insulating material is adhered to interior surface **72**, wrapped over the one upper edge **70**, placed over the exterior surface **74**, wrapped over the second upper edge **70**, and adhered to interior surface **72**. When wrapped with the sheet of first insulating material, the exterior surface **74** of unistrut **62** is covered, but the interior surface **72** of unistrut **62** need not be completely covered. What is important is that exterior surface **74** and both upper edges **70** of unistrut **62** be covered with the first insulating material. Construction of the piping insulation insert is then completed by filling the volume **76** defined by the interior surface of the u-shaped unistrut **62**, extending up to the upper edges **70** of the unistrut **62**, with a second insulating material. Volume **76** of the length of unistrut **62** is packed with the second insulating material from base **66** up to a surface defined by the two edges **70**, which may be thought of a the upper surface of the u-shape of unistrut **62**.

The first insulating material may be the same as the second insulating material, or it may be different.

Figure 5 illustrates a piping insulation insert **80** where the first insulating material is the same as the second insulating material. In this embodiment of the invention, piping insulation insert **80**

appears as a block of insulating material. Figure 5 is a perspective view, so only the front **82**, right side **84**, and top **86** surfaces of the piping insulation insert **80** are visible. Right side surface **84**, as well as edges **88** and **89**, are covered by the sheet of first insulating material that has been wrapped around exterior surface **74** of unistrut **62**. Although unseen in the perspective view of Figure 5, the lower surface (opposite top surface **86**), and left side surface (opposite right side surface **84**) are also covered by the sheet of first insulating material that has been wrapped around exterior surface **74** of unistrut **62**. Front surface **82** and top surface **86** are formed of the second insulating material, being the front and top surfaces of the volume **76** of unistrut **62** (seen in Figure 4) that have been packed with second insulating material. Although unseen in the perspective view of Figure 5, the back surface (opposite front surface **82**) is also formed of the second insulating material, being the back surface of the volume **76** of unistrut **62** (seen in Figure 4) that has been packed with second insulating material. Because the first and second insulating materials are the same, piping insulation insert **80** of this embodiment appears as a block of one insulating material.

Figure 6 illustrates a piping insulation insert **90** where the first insulating material is different than the second insulating material. In this embodiment of the invention, piping insulation insert **90** also appears as a block of insulating material but two different insulating materials will be seen if the first insulating material has a different appearance to the second. Like Figure 5, Figure 6 is a perspective view, so only the front **92**, right side **94**, and top **96** surfaces of the piping insulation insert **90** are visible. Right side surface **94**, as well as edges **98** and **99**, are covered by the sheet of first insulating material that has been wrapped around exterior surface **74** of unistrut **62**. Although unseen in the perspective view of Figure 6, the lower surface (opposite top surface **96**), and left side surface (opposite right side surface **94**) are also covered by the sheet of first insulating material that has been wrapped around exterior surface **74** of unistrut **62**. Front surface **92** and top surface **96** are formed of the second insulating material, being the front and top surfaces of the volume **76** of unistrut **62** (seen in Figure 4) that have been packed with second insulating material. Although unseen in the perspective view of Figure 6, the back surface (opposite front surface **92**) is also formed of the second insulating material, being the back surface of the volume **76** of unistrut **62** (seen in Figure 4) that has been packed with second insulating material.

Both piping insulation insert **80** and **90** are used in the same manner. Figure 7 illustrates a preformed section **12** of piping insulation from which a portion **50** has been cut out from the underside **52** thereof. Cut out portion **50** is sized to match that of the top surface **86** or **96** of piping insulation insert **80** or **90**, respectively. The positioning of piping insulation insert **80** is shown in Figure 8, and the positioning of piping insulation insert **90** would be the same. The view shown in Figure 8 is analogous to the view shown in Figure 1 of a prior art system of hanging insulated pipe without a piping insulation insert, except if Figure 8, the piping sitting within the insulation is not shown, so the positioning of piping insulation insert may better be seen.

In the example of Figure 8, a single length of pipe (not shown), surrounded by preformed sections of piping insulation **12** prepared in the manner as described above and shown in Figure 7, is suspended from a system of supports **20**. Each support **20** consists of a piece of unistrut **22** suspended from two threaded metal rods **24** which protrude from two holes (not shown) placed through the base portion **26** of unistrut **22**, with one hole toward each end of unistrut **22**. Each threaded rod **24** is secured to unistrut **22** by two nuts (not shown), one above the base portion **26** of unistrut **22**, and one below the base portion **26** of unistrut **22**. Top surface **86** of piping insulation insert **80** is positioned adjacent to pipe (not shown) sitting within the sections of piping insulation **12**. Piping insulation insert **80** is sized so that the height of the front surface **82** thereof matches the thickness of the sections of piping insulation **12**. In operation, piping insulation insert **80** will support the weight of the pipe sitting within the insulation without the thickness of piping insulation being compressed.

How piping insulation insert **80** supports the weight of the pipe is better seen in Figure 9, which is a cross-sectional view of the system shown in perspective view in Figure 8. System of supports 20 comprises unistrut **22** suspended by two threaded metal rods **24**. Pipe **1** is surrounded by section of insulation **12**, and piping insulation insert **80** is seen between the bottom surface of the pipe **1** and the top edge of the unistrut **22** of the system of supports **20**. The height of the front face **82** of the piping insulation support is equal to the thickness of the insulation in the section of insulation **12**, and the section of insulation **12** is not compressed by the weight of the pipe since piping insulation insert **80** supports the weight of the pipe.

Because the unistrut **62** inside of piping insulation insert **80** or **90** has its upper edges **70** and exterior surface of base **66** covered by the first insulating material, there is no direct contact between the outer surface of pipe **1**, the unistrut **62** inside the piping insulation insert **80** or **90** and the unistrut **22** of the system of supports **20**. The transfer of heat or cold from the inside of pipe **1** to the unistrut **22** of the system of supports **20** through unistrut **62** inside the piping insulation insert **80** or **90** is minimized due the barrier of the first insulating material in the piping insulation insert **80** or **90**.

For example, pipe carrying a chilled liquid may be insulated with a layer of elastomeric thermal insulation. An insulation of this type is commercially available under the trade name AP/Armaflex® from Armacell LLC of Mebane, North Carolina, U. S. A. The closed cell structure of elastomeric insulation effectively retards the flow of moisture vapor and is considered a low-transmittance vapor retarder. This elastomeric insulation has a thermal conductivity of 0.27 BTU-in/hr. ft^2 °F, a water vapor transmission of 0.08 per-inch, complies with CAN/ULC S-102 for 25/50 flame spread and smoke development requirements and is rated for usage between -57°C and +105°C. A piping insulation insert made with AP/Armaflex® insulation as the first and second insulating material has been tested by cutting an opening in the insulation of a pipe coated with AP/Armaflex® insulation to match the size of the piping insulation insert, inserting the piping insulation insert in the opening and foil taping the insert in place using ULC 25/50 flame and smoke rated aluminum foil tape. Cold liquid was run through the pipe without unacceptable levels of transmission of cold to or condensation observed on the structure used to suspend the insulated pipe.

In another example, pipe carrying a heated liquid or gas may be insulated with a layer of insulation made from high temperature mineral wool, wrapped in an external layer of fabric made of plain weave high temperature treated fiberglass. High temperature mineral wool insulation is commercially available under the tradename ROXUL®, such as ROXUL® RHT 60, from Roxul Inc. of Milton, Ontario, Canada. Fabric made of plain weave high temperature treated fiberglass is commercially available under the trade name Alpha-Weld™ style 2025/VCF from Alpha Associates, Inc. of Lakewood, New Jersey, U.S.A. Insulation comprising a layer of mineral wool of this type, wrapped in an external layer of fabric of this type complies with

CAN/ULC S-102 for 25/50 flame spread and smoke development requirements and is rated for usage temperatures of 650°C maximum. A piping insulation insert made with Alpha-Weld™ style 2025/VCF fabric insulation as the first insulating material and ROXUL®RHT 60 mineral wool as the second insulating material has been tested by cutting an opening in the insulation of a pipe coated with mineral wool wrapped in plain weave high temperature treated fiberglass fabric insulation to match the size of the piping insulation insert, inserting the piping insulation insert in the opening and foil taping the insert in place using ULC 25/50 flame and smoke rated aluminum foil tape. Heated liquid was run through the pipe without unacceptable levels of transmission of heat to or condensation observed on the structure used to suspend the insulated pipe.

CLAIMS:

1. A piping insulation insert comprising:

a length of unistrut having a u-shaped cross-sectional profile in a face perpendicular to the length of the u-shaped unistrut, wherein the u-shaped unistrut is formed of a rigid material and comprises a base portion and two arm portions extending upwardly therefrom to form the u-shaped cross-sectional profile, the base and arm portions defining an interior and an exterior surface of the u-shaped unistrut with each of the interior and exterior surfaces extending the length of the u-shaped unistrut, and two upper edges of the u-shaped unistrut defined by end points of each of the two arm portions furthest away from the base portion, each of the two upper edges extending the length of the u-shaped unistrut with each of the two upper edges separating the interior surface from the exterior surface, wherein:

the exterior surface of the u-shaped unistrut is covered with a first insulating material;

a volume defined by the interior surface and the two upper edges of the u-shaped unistrut is packed with a second insulating material; and

the two upper edges of the u-shaped unistrut are covered with the first insulating material.

2. The piping insulation insert of claim 1, wherein the rigid material is metallic.

3. The piping insulation insert of claim 2, wherein the first insulating material is the same as the second insulating material.

4. The piping insulation insert of claim 3, wherein the first insulating material and the second insulating material is an elastomeric foam insulation.

5. The piping insulation material of claim 2, wherein the first insulating material is different from the second insulating material.

6. The piping material of claim 5, wherein the first insulating material is an insulating fabric made of plain weave high temperature treated fiberglass and the second insulating material is high temperature mineral wool insulation.

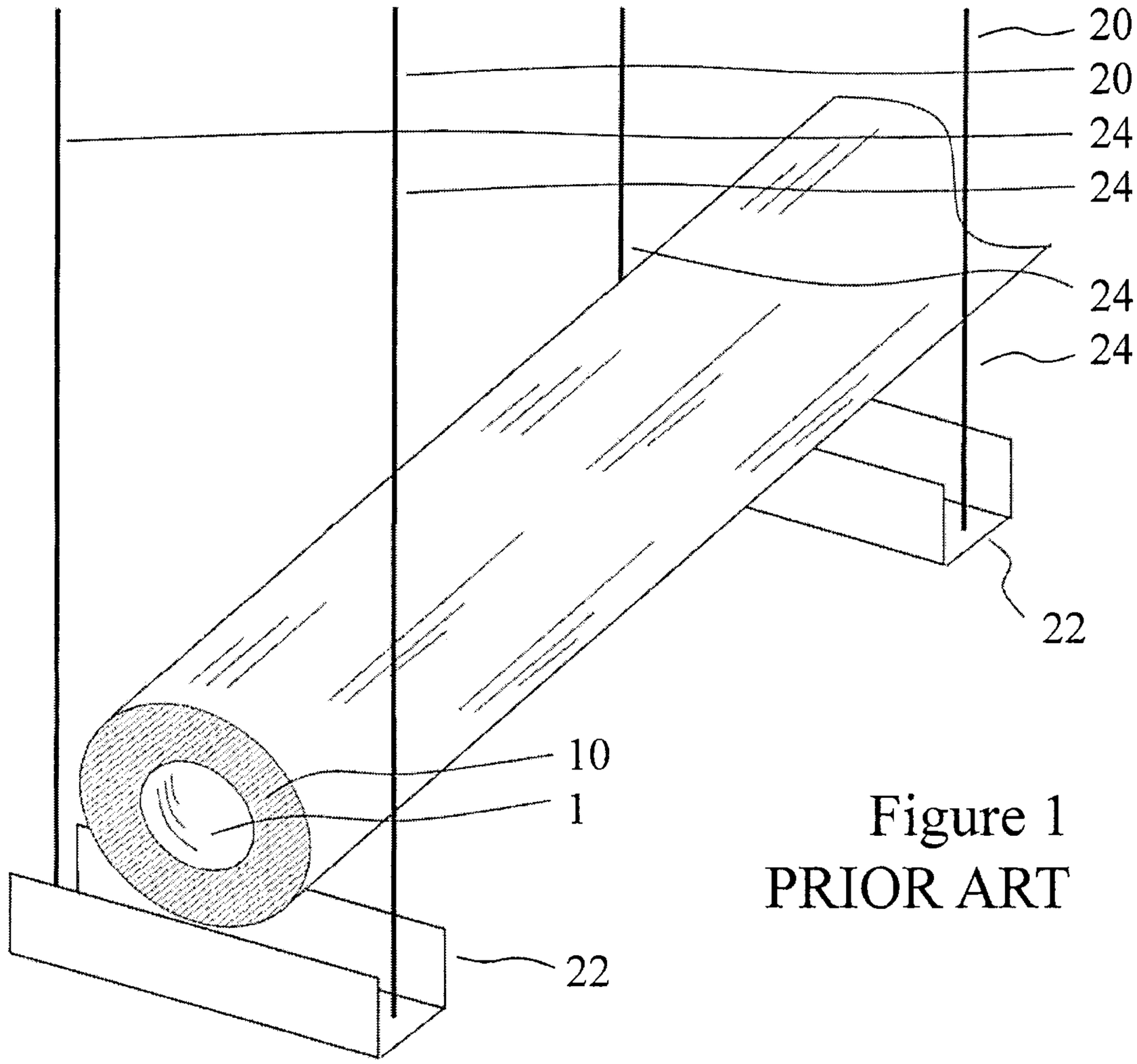

Figure 1
PRIOR ART

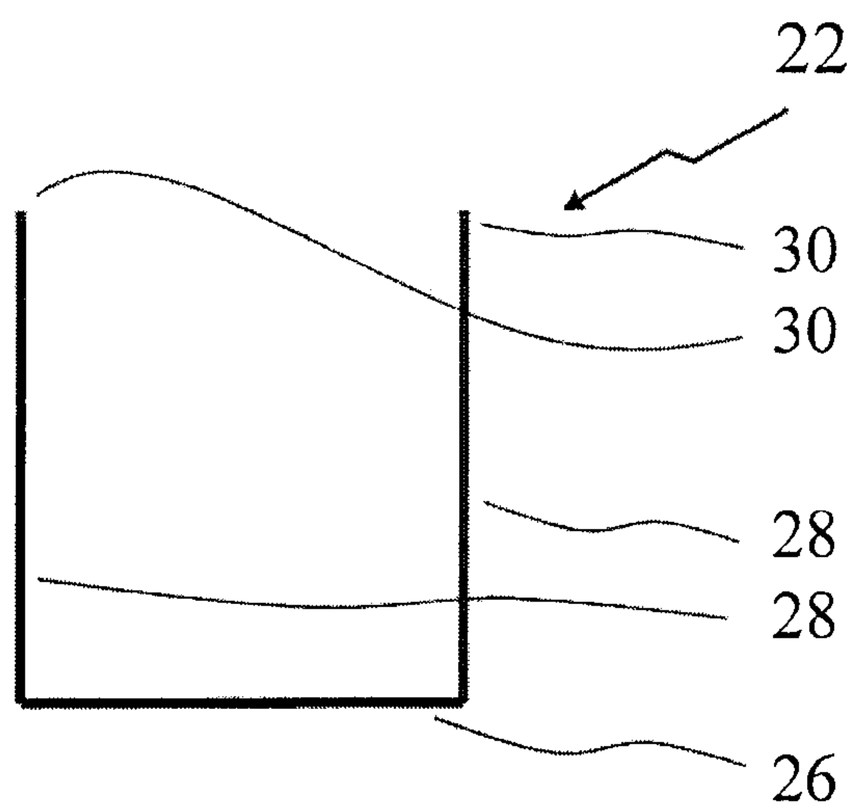

Figure 2
PRIOR ART

Figure 3
PRIOR ART

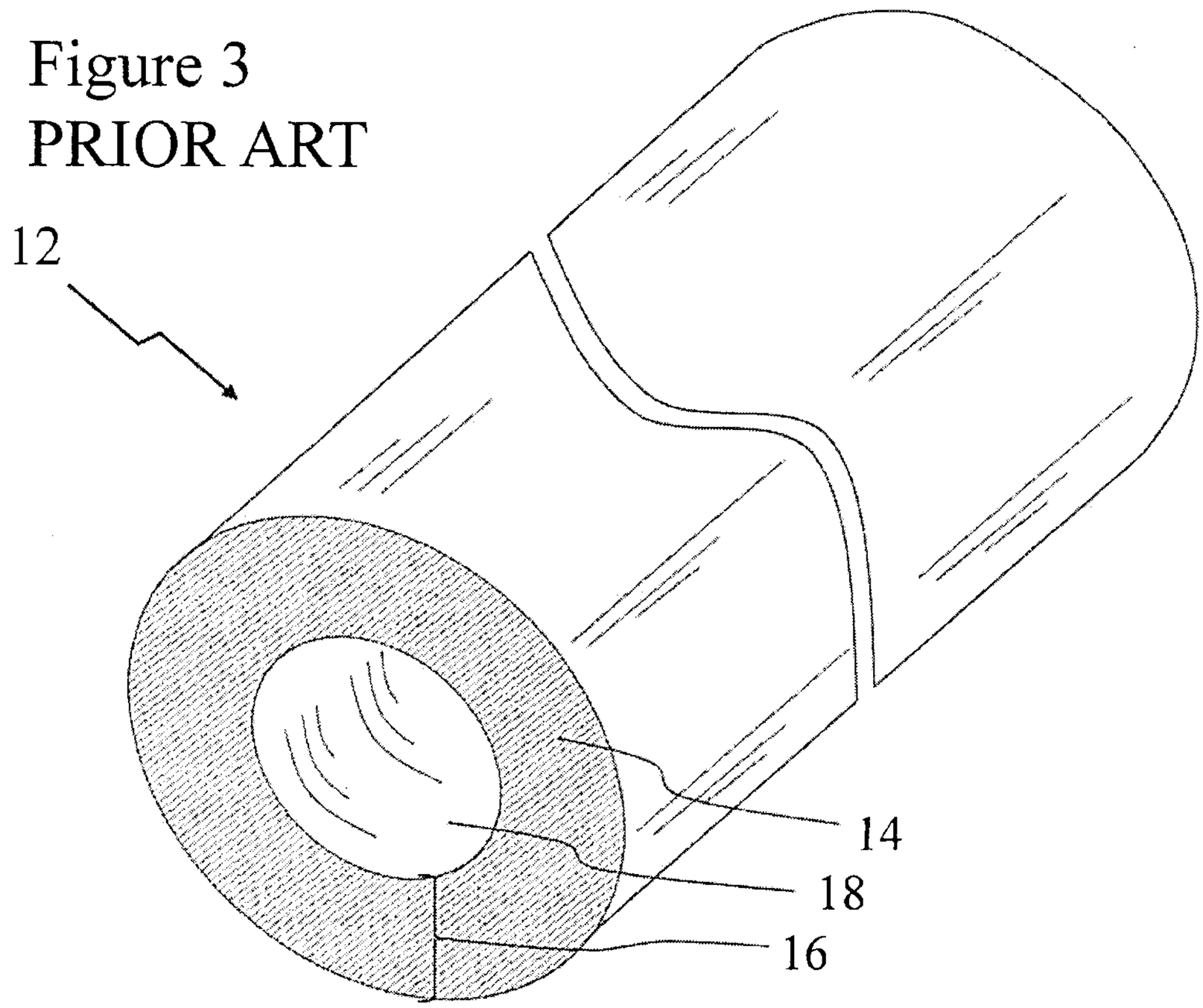

Figure 4

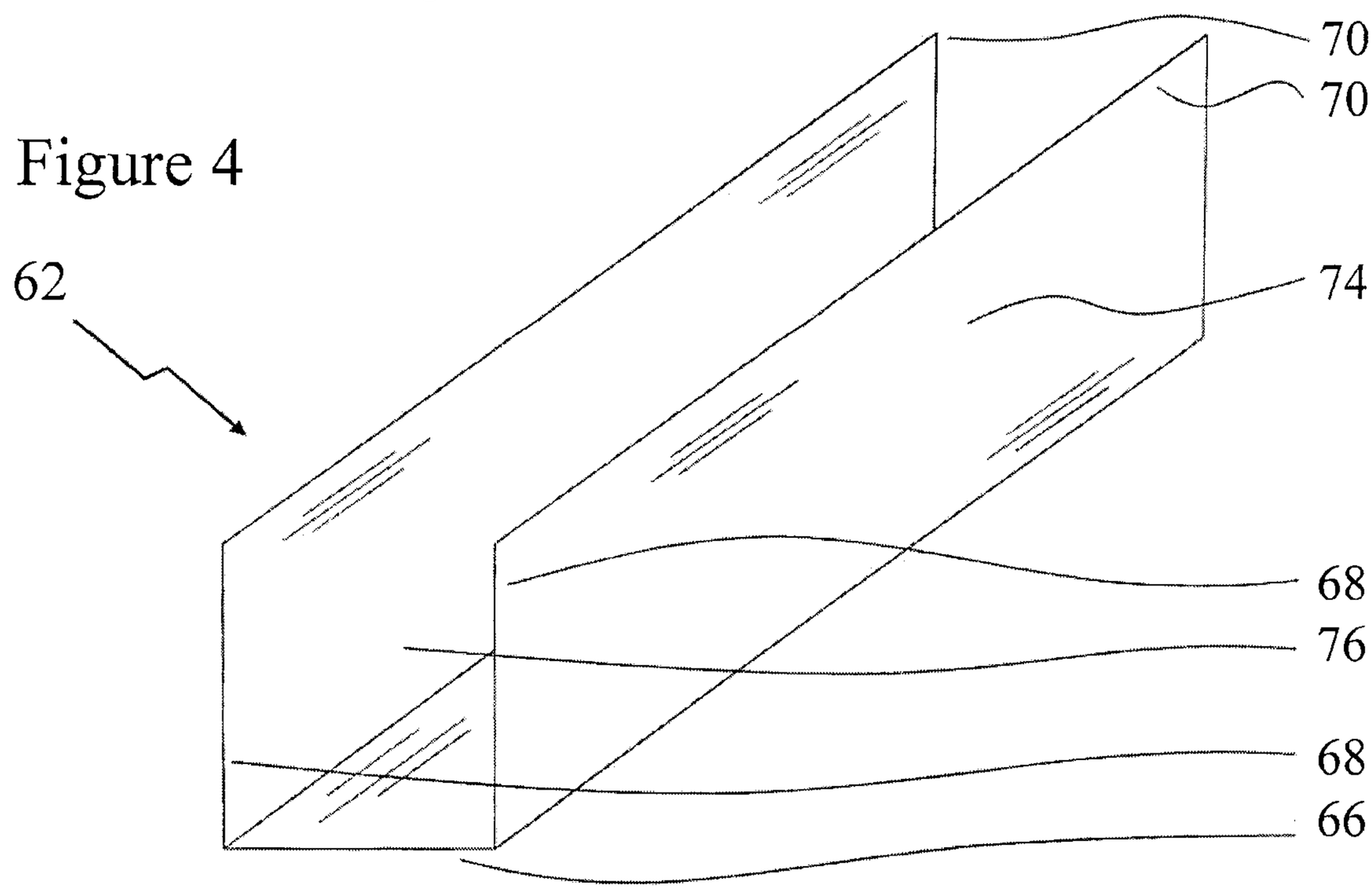

Figure 5

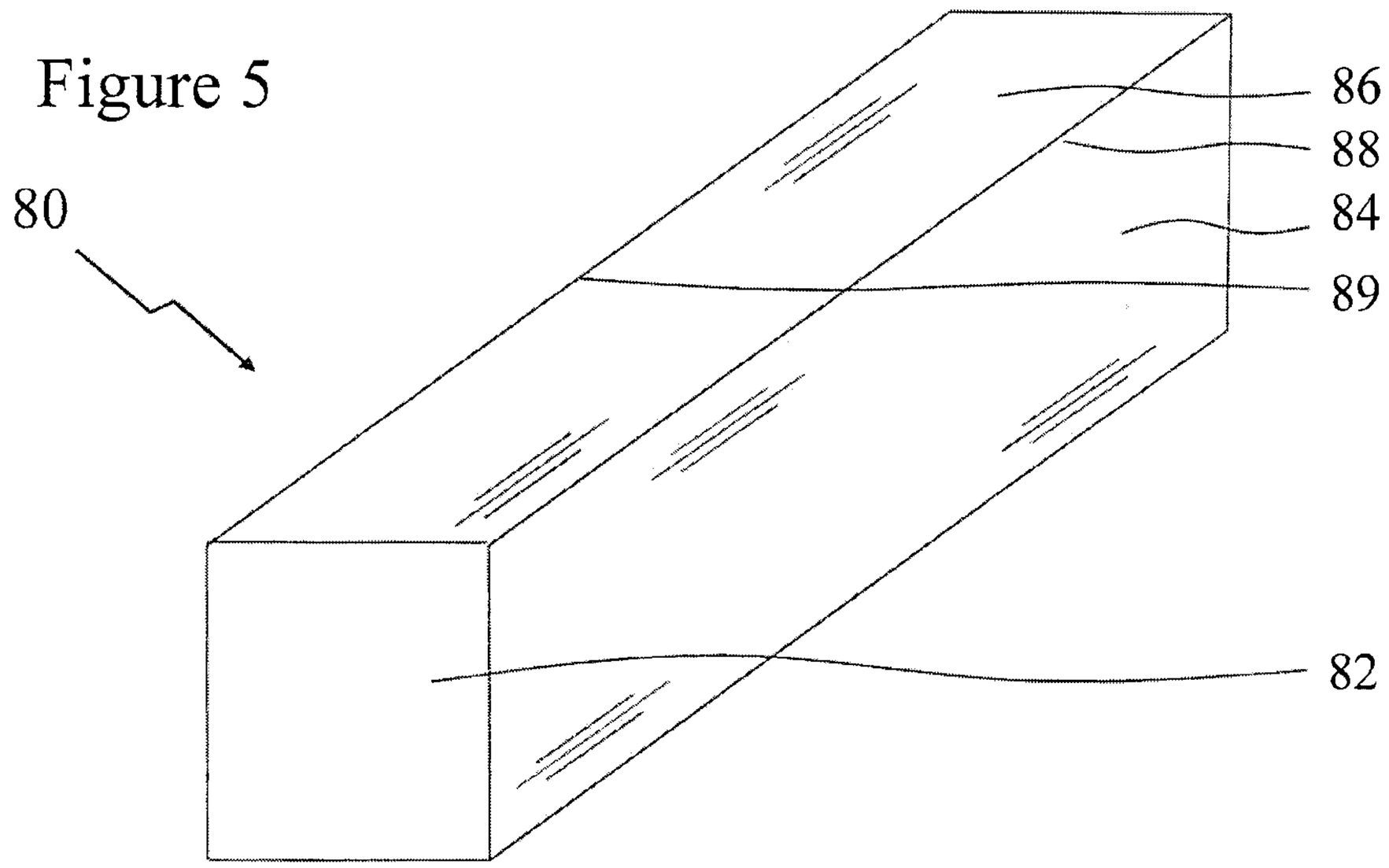

Figure 6

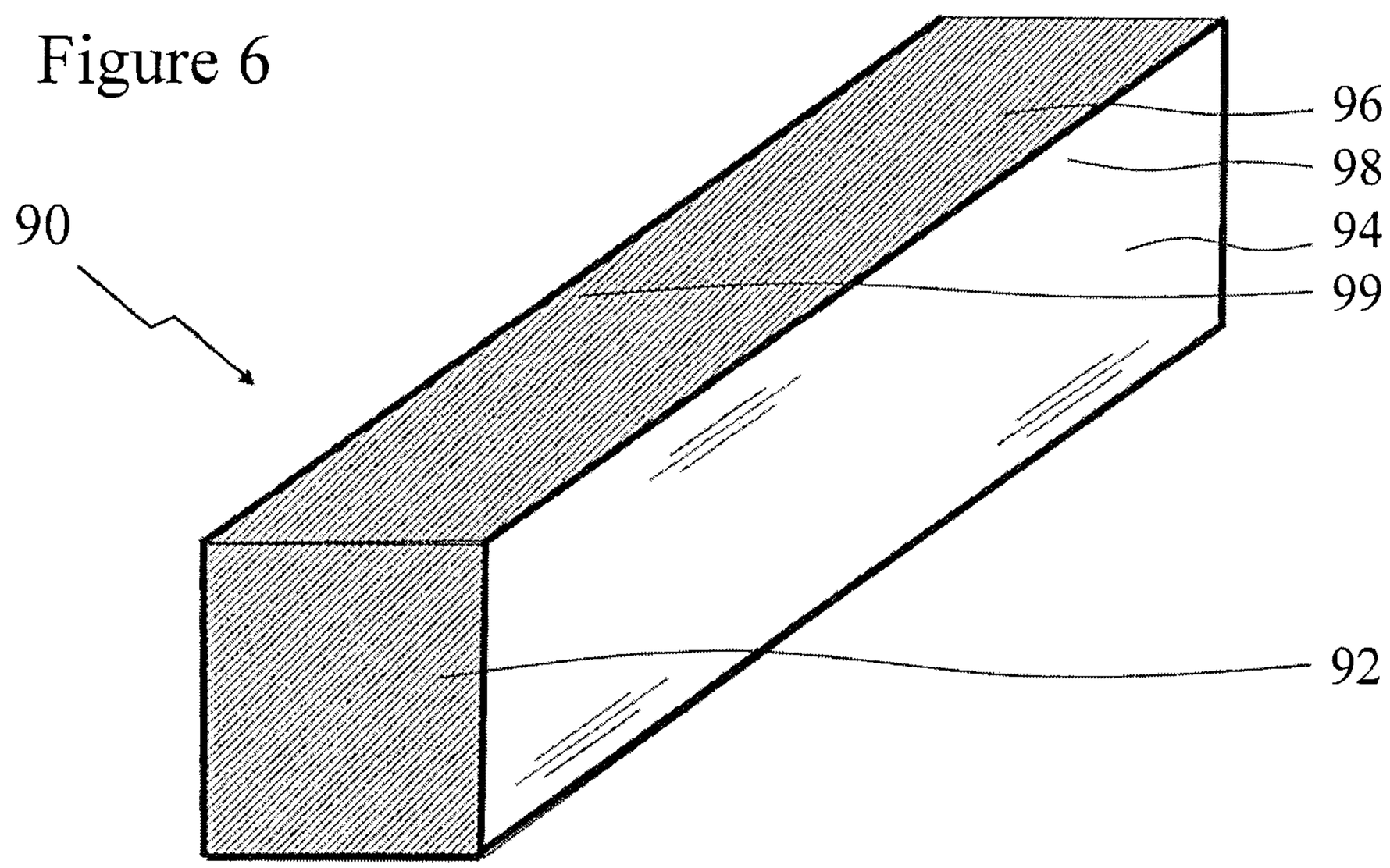

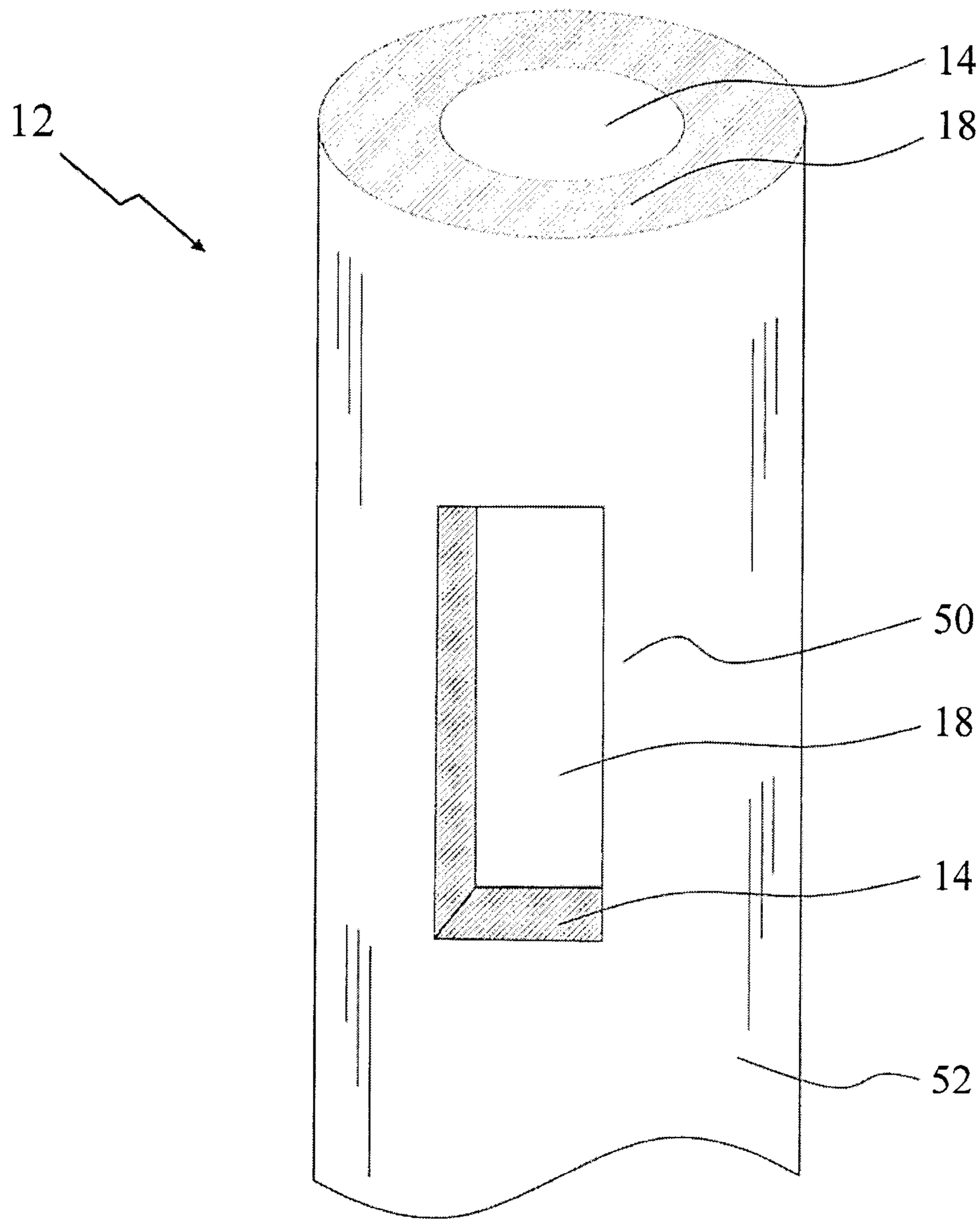

Figure 7

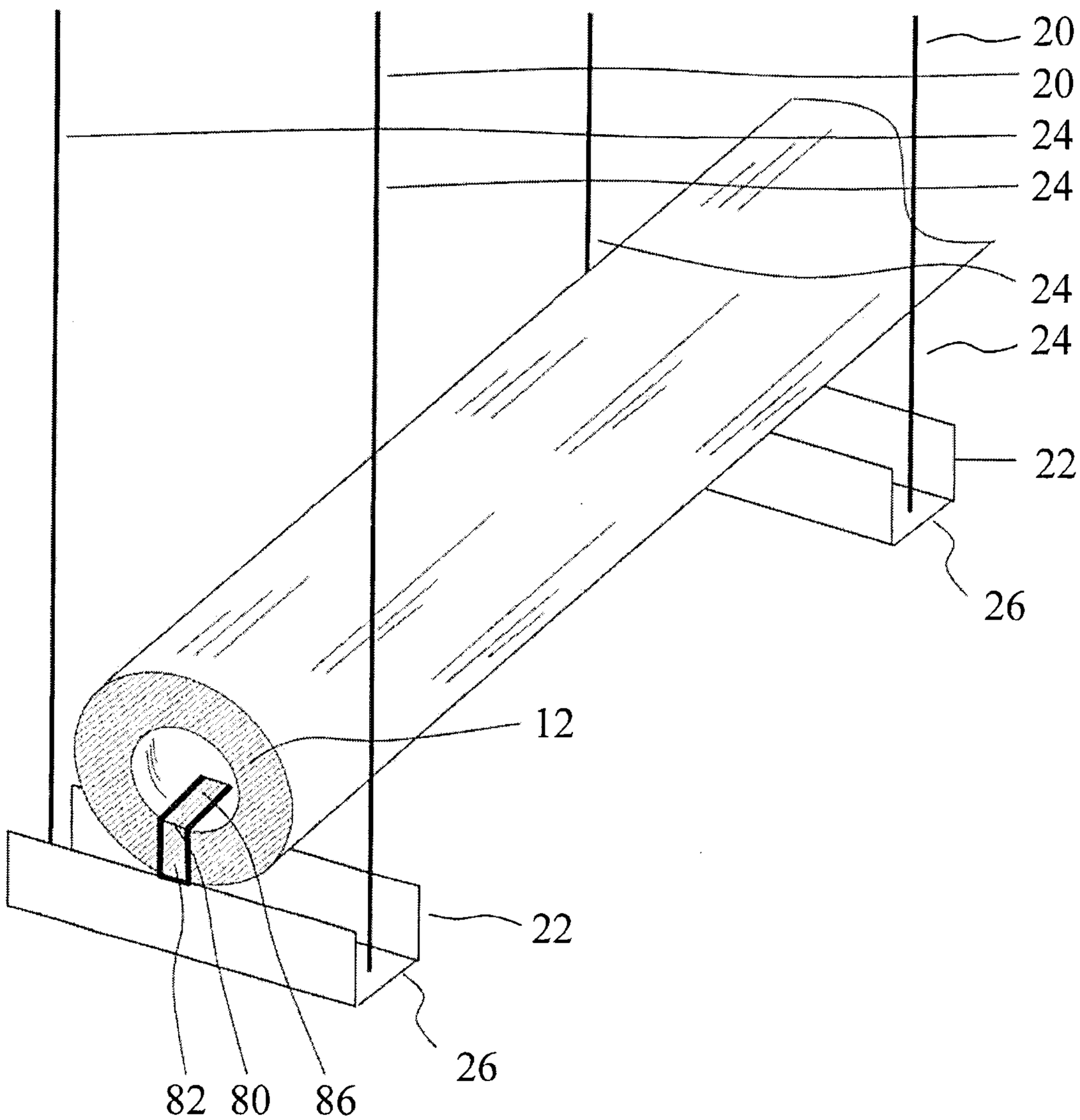

Figure 8

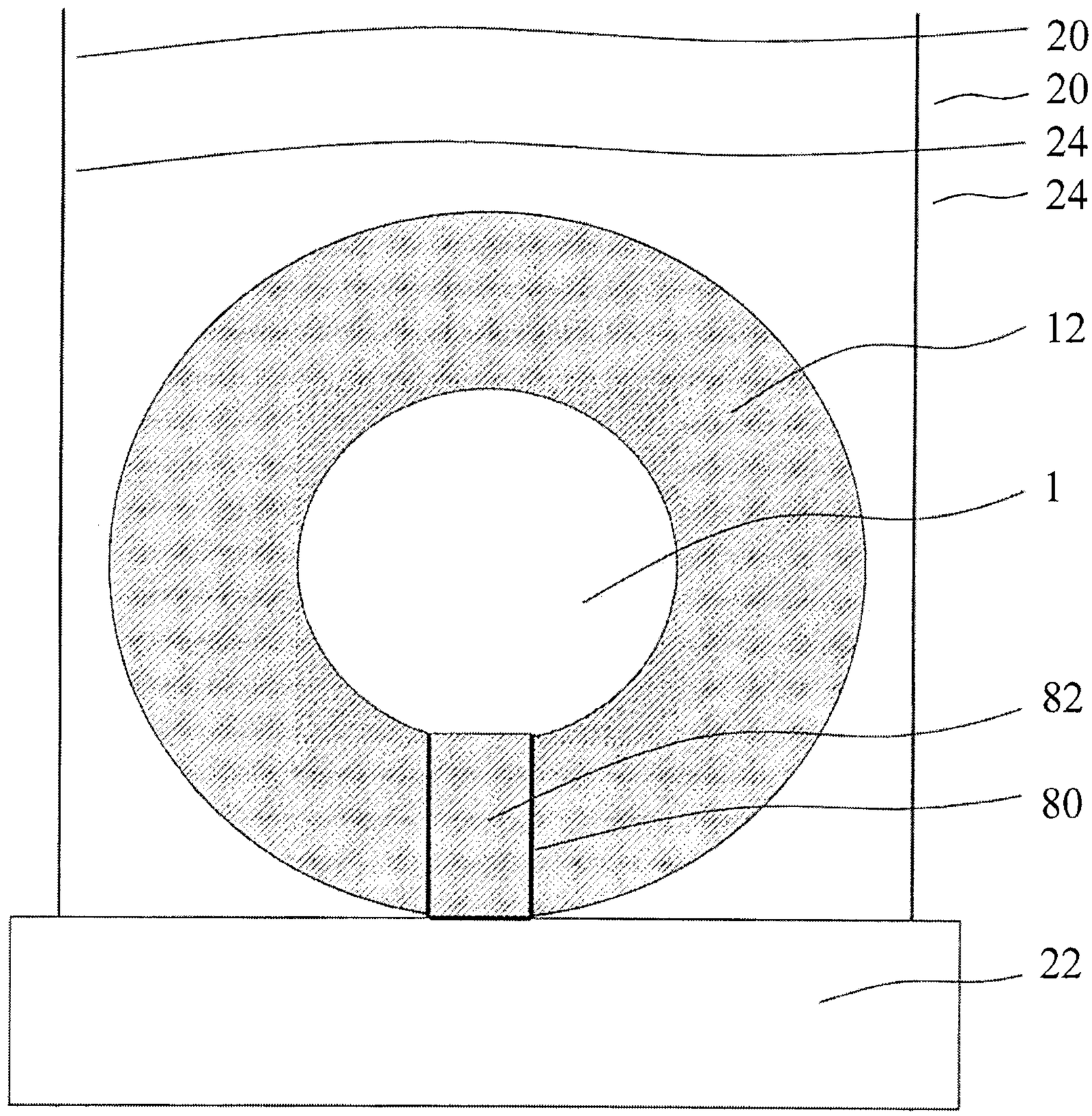

Figure 9

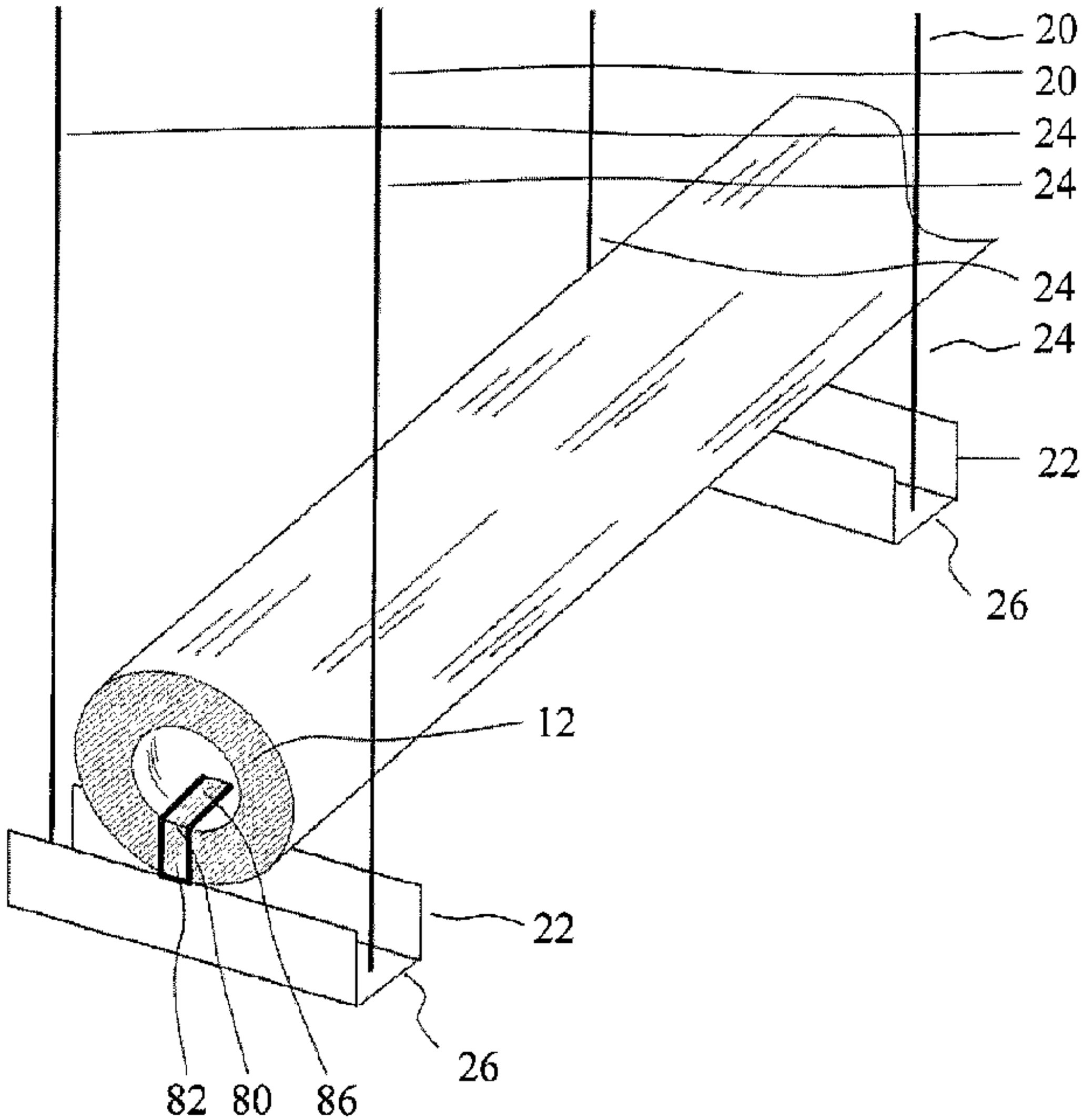
20
20
24
24
24
24
22
26
12
22
26
82
80
86