US00D574331S

(12) United States Design Patent

Bedggood

(10) Patent No.: US D574,331 S
(45) Date of Patent: ** Aug. 5, 2008

(54) **SWITCH**

(75) Inventor: **Luke Bedggood**, Surbiton (GB)

(73) Assignee: **Albright International Limited**, Surbiton, Surrey (GB)

(**) Term: **14 Years**

(21) Appl. No.: **29/292,644**

(22) Filed: **Oct. 22, 2007**

(30) **Foreign Application Priority Data**

Apr. 23, 2007 (EM) 000711825-0002

(51) **LOC (8) Cl.** **13-03**
(52) **U.S. Cl.** **D13/158**
(58) **Field of Classification Search** D13/158, D13/171; 200/341, 302.1, 524
See application file for complete search history.

(56) **References Cited**

U.S. PATENT DOCUMENTS

D183,430	S	*	8/1958	Schmidt	D13/171
3,624,328	A	*	11/1971	Hansen	200/524
D266,084	S	*	9/1982	Colavecchio	D13/158
D288,315	S	*	2/1987	Nelson	D13/158
4,965,420	A	*	10/1990	Phillips et al.	200/341
5,345,050	A	*	9/1994	Branch et al.	200/341
6,144,000	A	*	11/2000	Webb	200/302.1
6,326,572	B1	*	12/2001	Yu	200/524
D511,504	S	*	11/2005	Sang	D13/171
2002/0046938	A1	*	4/2002	Donofrio et al.	200/302.1
2002/0125119	A1	*	9/2002	Cole et al.	200/341

* cited by examiner

Primary Examiner—Daniel Bui
Assistant Examiner—Thomas J Johannes
(74) *Attorney, Agent, or Firm*—RatnerPrestia

(57) **CLAIM**

The ornamental design for a switch, as shown and described.

DESCRIPTION

FIG. **1** is a top plan view of the switch showing my new design.

FIG. **2** is a bottom plan view thereof.

FIG. **3** is a front view thereof.

FIG. **4** is a rear view thereof.

FIG. **5** is a left side view thereof.

FIG. **6** is a right side view thereof; and,

FIG. **7** is a perspective view thereof.

The broken lines are for illustration only and form no part of the claimed design.

1 Claim, 7 Drawing Sheets

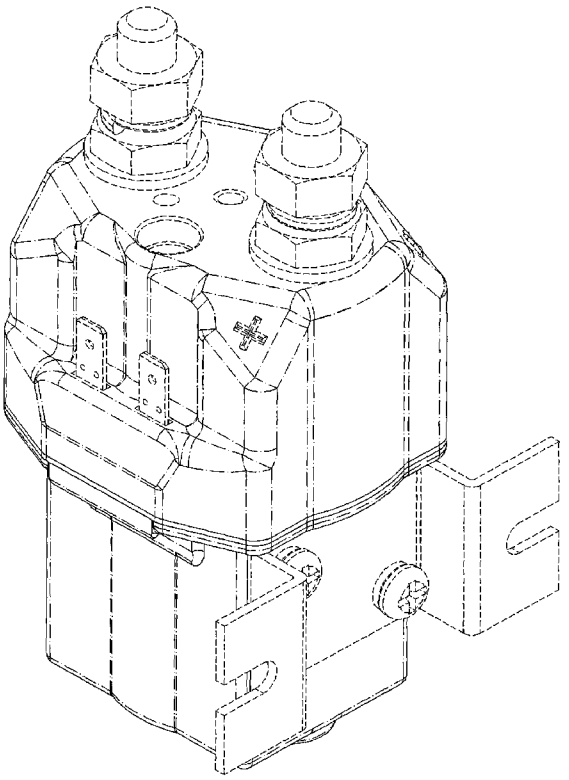

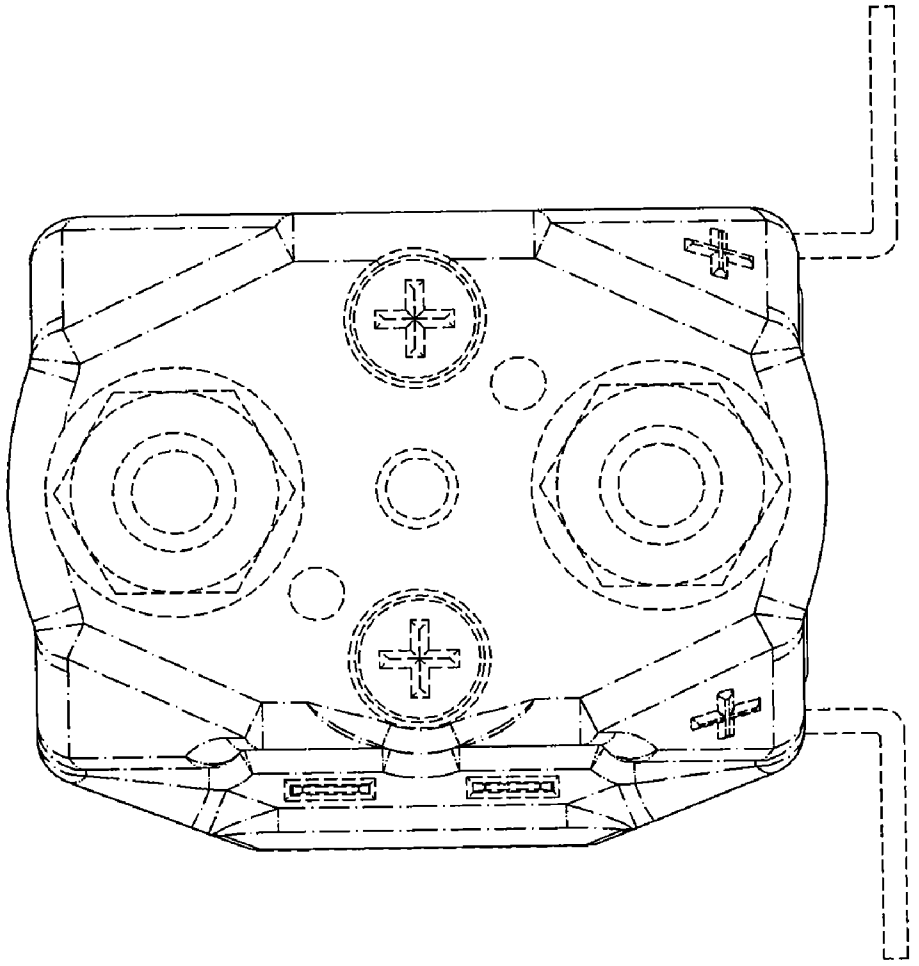

FIG. 1

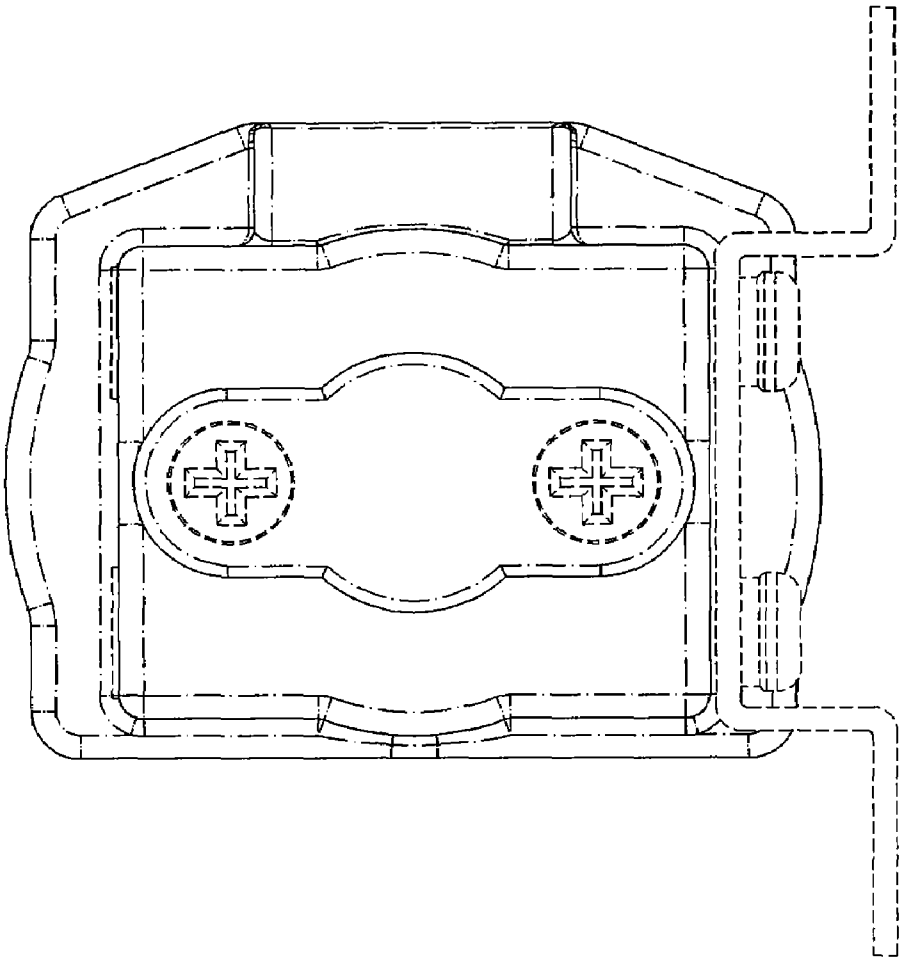

FIG. 2

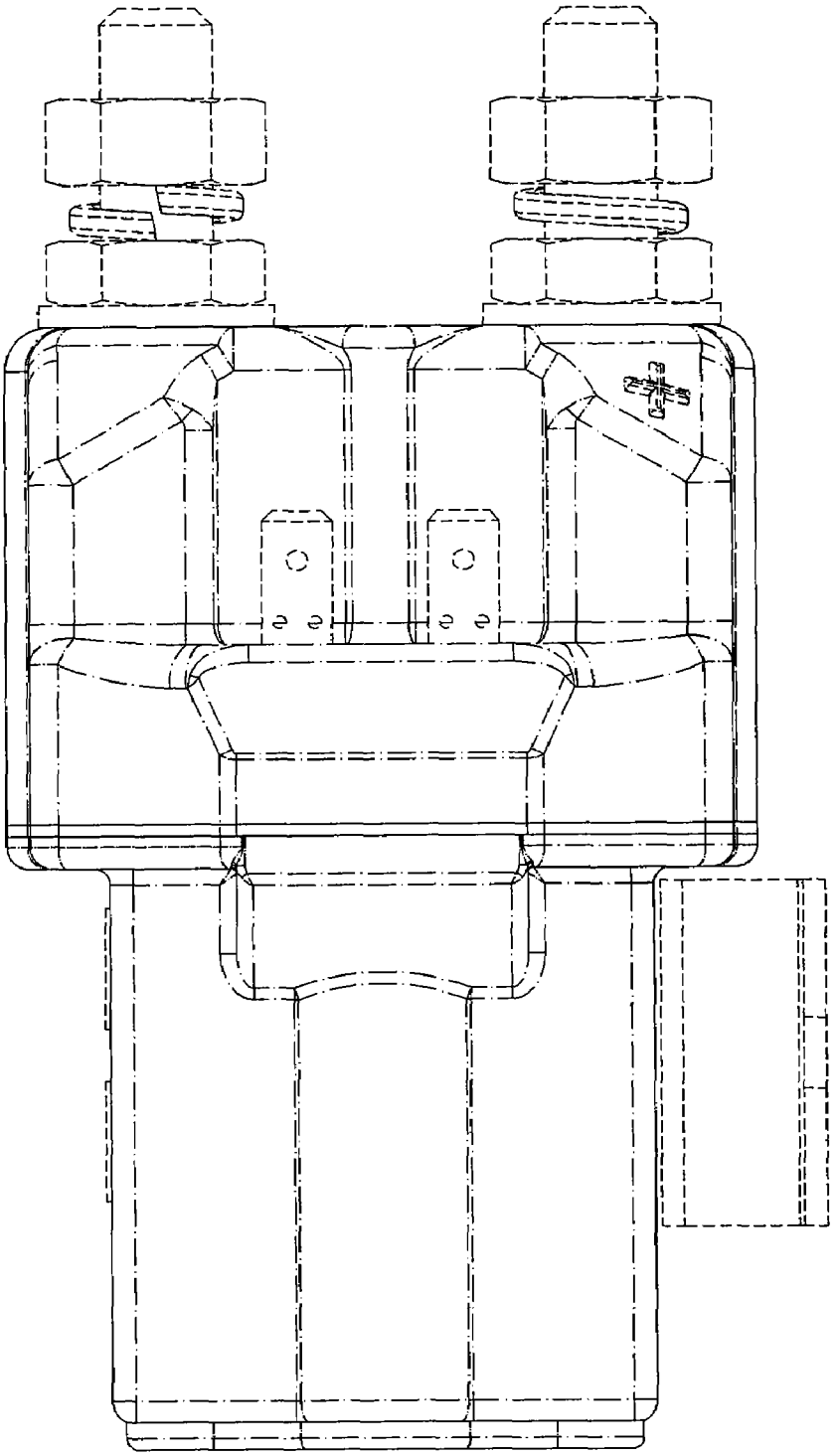

FIG. 3

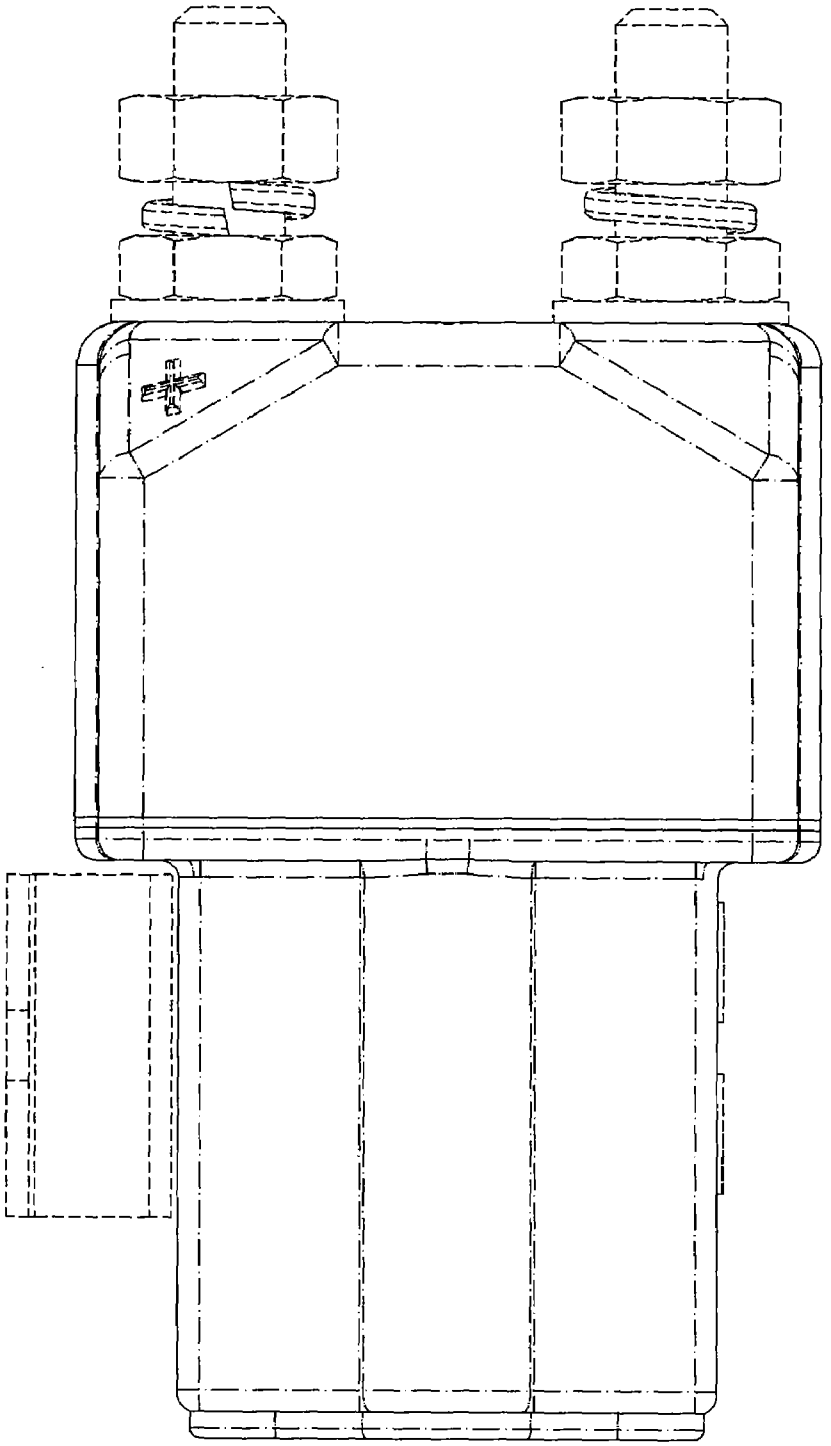

FIG. 4

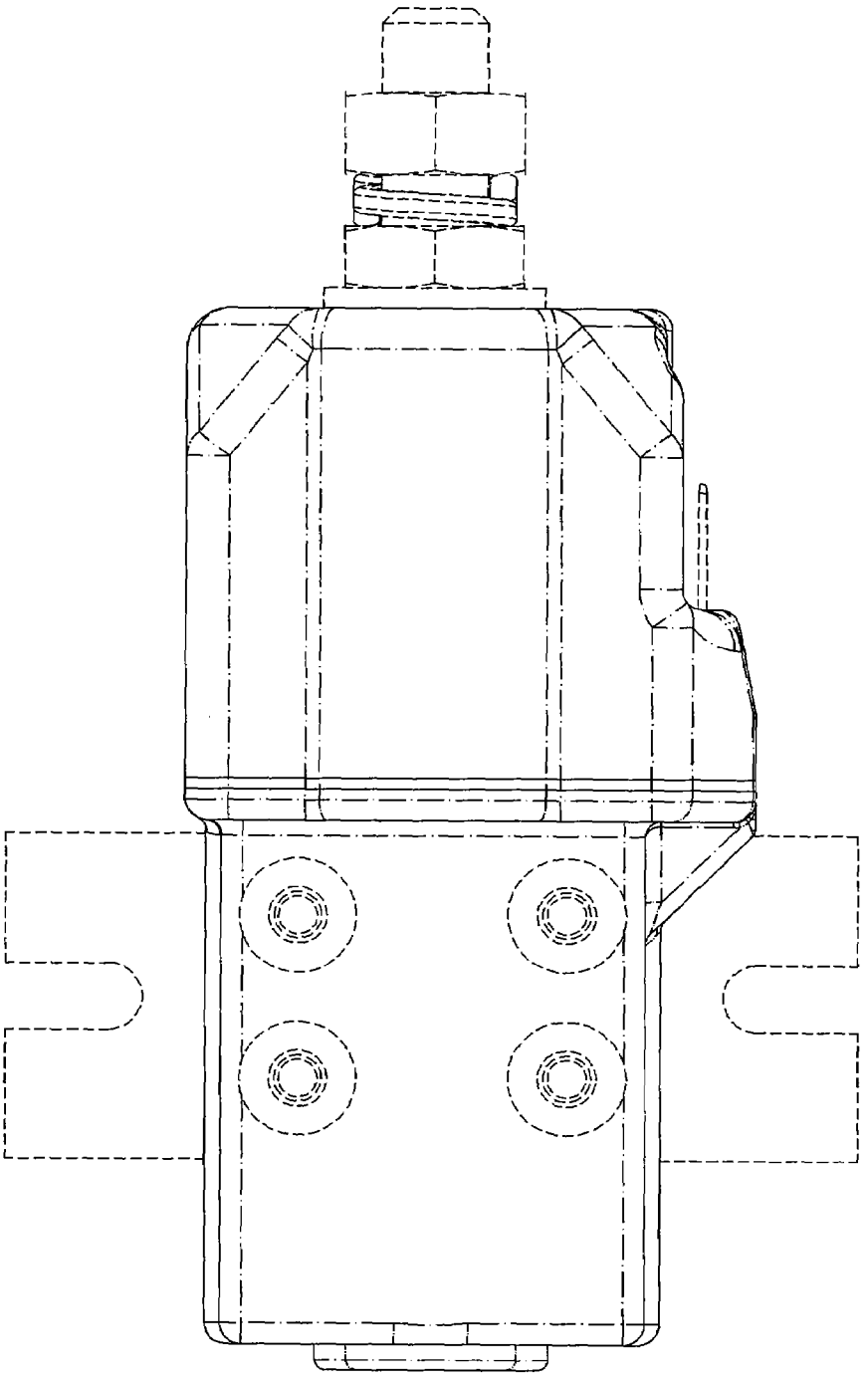

FIG. 5

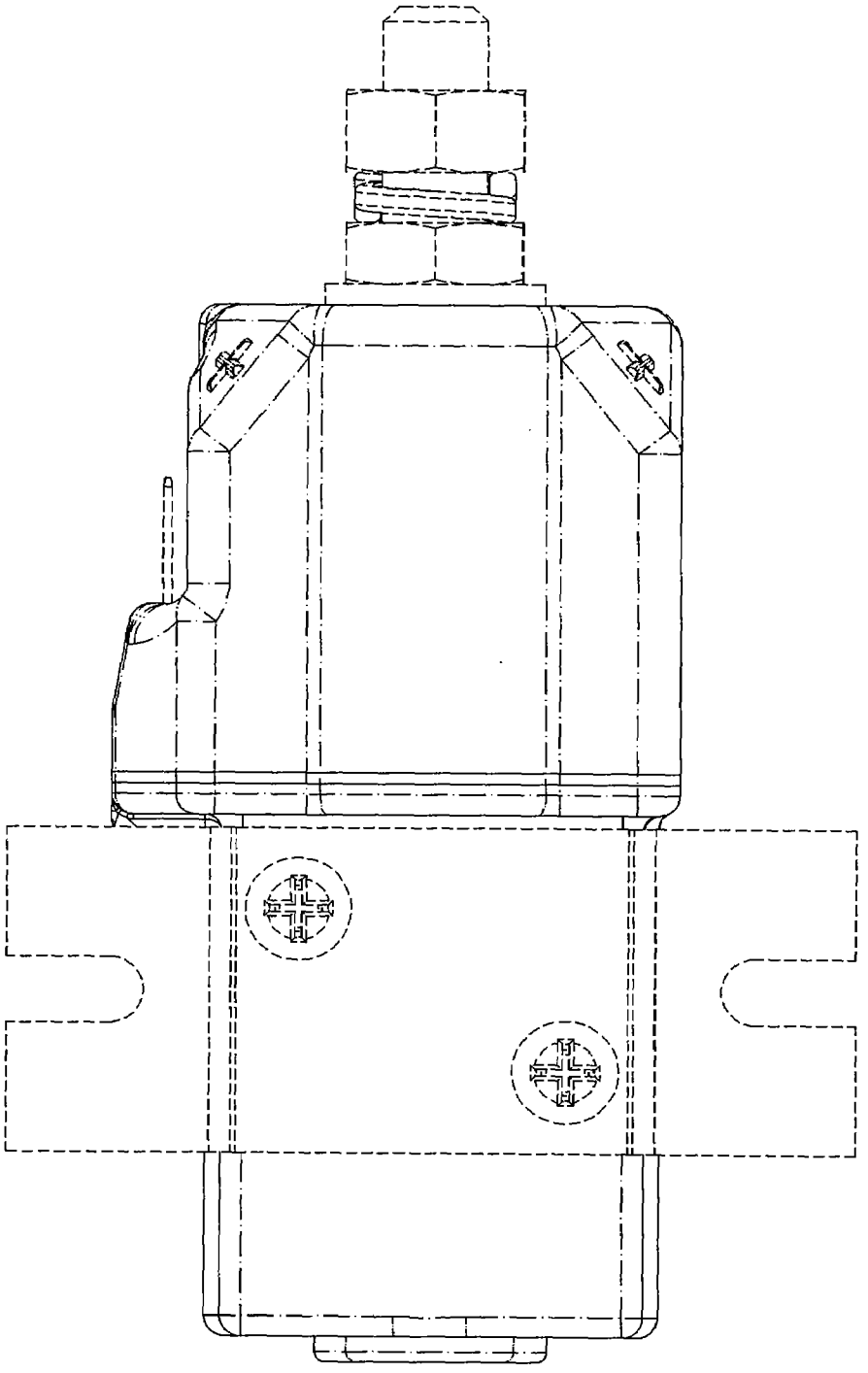

FIG. 6

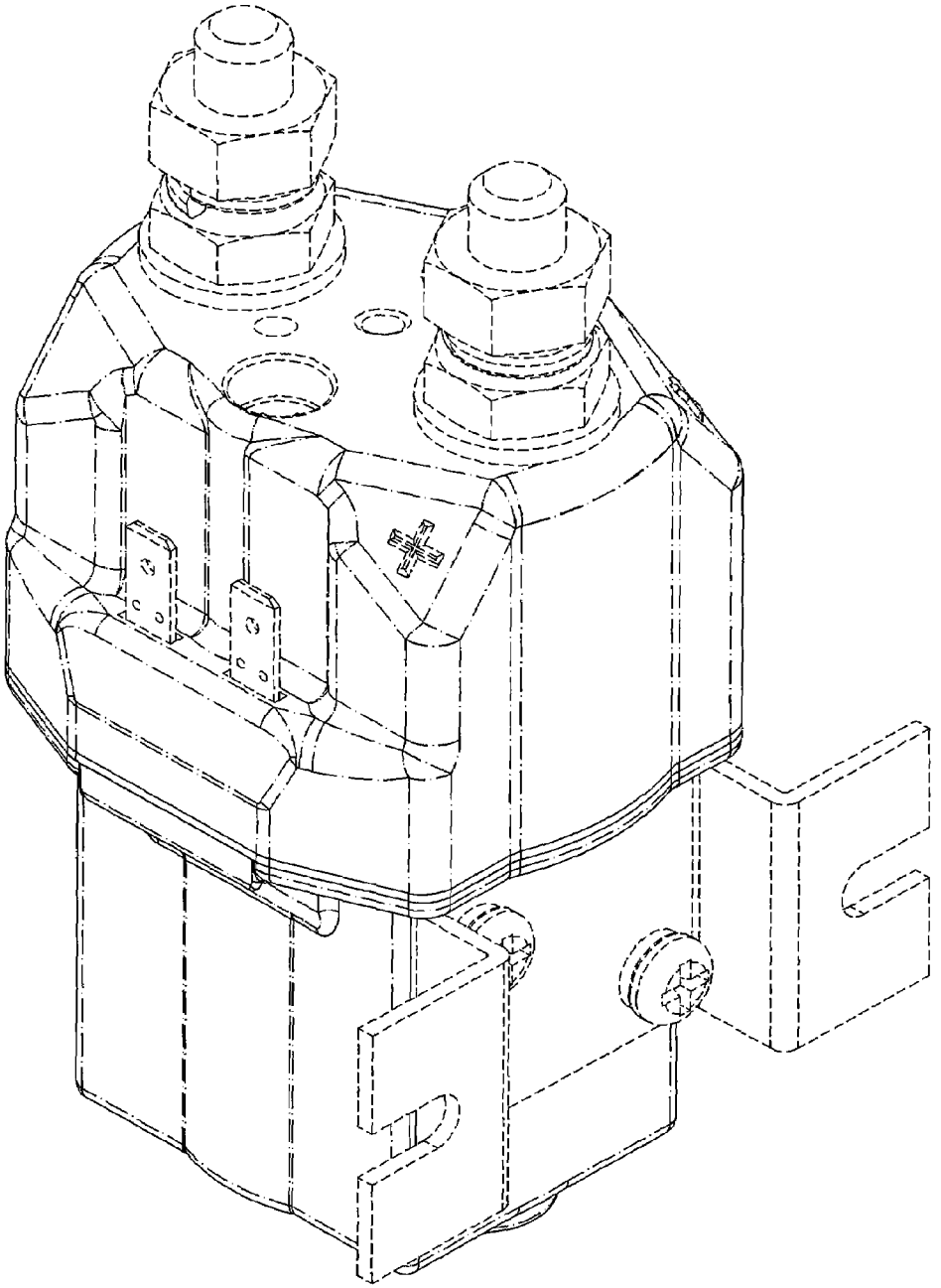

FIG. 7