(12) INTERNATIONAL APPLICATION PUBLISHED UNDER THE PATENT COOPERATION TREATY (PCT)

(19) World Intellectual Property Organization
International Bureau

(43) International Publication Date
2 April 2015 (02.04.2015)

WIPO | PCT

(10) International Publication Number
WO 2015/047089 A1

(51) International Patent Classification:
H01L 21/56 (2006.01) *B29C 45/14* (2006.01)

(21) International Application Number:
PCT/NL2014/050658

(22) International Filing Date:
26 September 2014 (26.09.2014)

(25) Filing Language: English

(26) Publication Language: English

(30) Priority Data:
2011512 26 September 2013 (26.09.2013) NL

(71) Applicant: **BESI NETHERLANDS B.V.** [NL/NL]; Ratio 6, NL-6921 RW Duiven (NL).

(72) Inventor: **GAL, Wilhelmus Gerardus Jozef**; Beekseweg 2, NL-7031 AX Kilder (NL).

(74) Agent: **VAN OEFFELT, Abraham**; Patentwerk B.V., P.O. Box 1514, NL-5200 BN 's-Hertogenbosch (NL).

(81) Designated States *(unless otherwise indicated, for every kind of national protection available)*: AE, AG, AL, AM, AO, AT, AU, AZ, BA, BB, BG, BH, BN, BR, BW, BY, BZ, CA, CH, CL, CN, CO, CR, CU, CZ, DE, DK, DM, DO, DZ, EC, EE, EG, ES, FI, GB, GD, GE, GH, GM, GT, HN, HR, HU, ID, IL, IN, IR, IS, JP, KE, KG, KN, KP, KR, KZ, LA, LC, LK, LR, LS, LU, LY, MA, MD, ME, MG, MK, MN, MW, MX, MY, MZ, NA, NG, NI, NO, NZ, OM, PA, PE, PG, PH, PL, PT, QA, RO, RS, RU, RW, SA, SC, SD, SE, SG, SK, SL, SM, ST, SV, SY, TH, TJ, TM, TN, TR, TT, TZ, UA, UG, US, UZ, VC, VN, ZA, ZM, ZW.

(84) Designated States *(unless otherwise indicated, for every kind of regional protection available)*: ARIPO (BW, GH, GM, KE, LR, LS, MW, MZ, NA, RW, SD, SL, ST, SZ, TZ, UG, ZM, ZW), Eurasian (AM, AZ, BY, KG, KZ, RU, TJ, TM), European (AL, AT, BE, BG, CH, CY, CZ, DE, DK, EE, ES, FI, FR, GB, GR, HR, HU, IE, IS, IT, LT, LU, LV, MC, MK, MT, NL, NO, PL, PT, RO, RS, SE, SI, SK, SM, TR), OAPI (BF, BJ, CF, CG, CI, CM, GA, GN, GQ, GW, KM, ML, MR, NE, SN, TD, TG).

Published:

— *with international search report (Art. 21(3))*

WO 2015/047089 A1

(54) Title: METHOD FOR MOULDING AND SURFACE PROCESSING ELECTRONIC COMPONENTS AND ELECTRONIC COMPONENT PRODUCED WITH THIS METHOD

(57) Abstract: The invention relates to a method for moulding and surface processing electronic components wherein a grid of electronic components is attached on a carrier; subsequently foil is placed against the side of the electronic components opposite to the carrier and are the electronic components partially encapsulated. After moulding the foil is removed from the electronic components and a free side of the components is surface processed. The invention also relates to a partial encapsulated electronic component as produced with such a method.

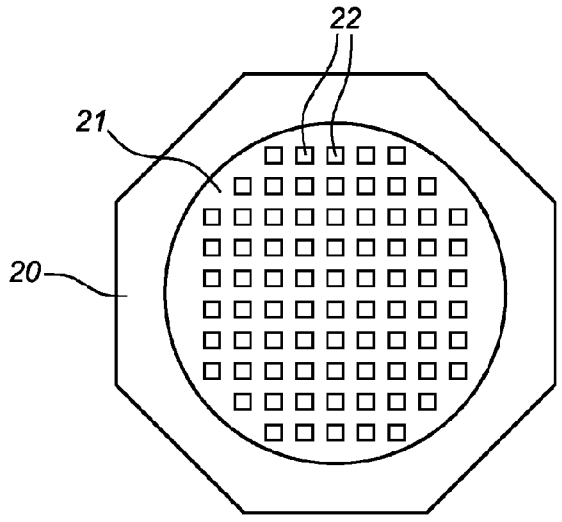

Fig. 3A

Method for moulding and surface processing electronic components and electronic component produced with this method

The invention relates to a method for moulding and surface processing electronic components by successive processing steps. These processing steps comprise - among others - A) the attachment of a grid of electronic components on a carrier; B) the placing a foil against the side of the electronic components opposite to the carrier; C) the enclosure of the foil covert electronic components on the carrier with a mould cavity; D) the feeding to the mould cavity of an encapsulating material; E) the at least partial hardening of the encapsulating material fed to the mould cavity; and F) removing from the mould cavity the partial encapsulated electronic components attached to the carrier.

During the encapsulation of electronic components mounted on a carrier, and more particularly the encapsulation of semiconductor circuits (chips) / integrated circuits (IC's), use is usually made according to the prior art of encapsulating presses provided with two mould halves, into at least one of which is recessed one or plural mould cavities. After placing the carrier with the electronic components for encapsulating between the mould halves, the mould halves may be moved toward each other, e.g. such that they clamp the carrier. A, normally heated, liquid encapsulating material may then be fed to the mould cavities, usually by means of transfer moulding. As an alternative it is also possible to bring the encapsulating material as a granulate in the mould cavity in which case the components to be moulded are pressed into the moulding material; such compression moulding process is an alternative for transfer moulding. Applied as encapsulating material is epoxy (also referred to as resin) which is generally provided with filler material. After at least partial (chemical) curing of the encapsulating material in the mould cavity/cavities, the carrier with encapsulated electronic components is taken out of the encapsulating press. And the encapsulated products are separated from each other during further processing. The use of foil is to screen or cover a part of the electronic components to be covered with the foil and thus to prevent a part of electronic component to be covered by the encapsulating material. The partial covered product (not over moulded products are also referred to as "bare die" products) can be used in various applications; like for instance various types of sensor components or heat dissipating components. This method of moulding is practised on large industrial

scale and enables well controlled moulding of partially uncovered electronic components. A problem during the subsequent processing of the partial moulded and separated electronic components is that the accuracy of the dimensions of the moulded product is not fully controllable, among others due to the heating and cooling that takes place during the moulding process.

The present invention has for its object to provide an alternative method and device with which the advantages of the prior art method of partial moulding of electronic components are maintained but that enable better/more accurate processing of the partial moulded electronic components in subsequent processing steps.

The invention provides for this purpose a method for moulding and surface processing electronic components by the successive processing steps of: A) attaching a grid of electronic components on a carrier; B) placing a foil against the side of the electronic components opposite to the carrier; C) enclosing the foil covert electronic components on the carrier with a mould cavity; D) feeding to the mould cavity an encapsulating material; E) at least partial hardening of the encapsulating material fed to the mould cavity; F) removing from the mould cavity the partial encapsulated electronic components attached to the carrier; G) removing the foil from the partial encapsulated electronic components attached to the carrier; H) providing at least one surface influencing process to the free side of the components attached to the carrier; and I) loosening the partial encapsulated and surface processed electronic components from the carrier. One of the advantages of the method according the present invention is that due to the reason that after removing the foil from the partial encapsulated electronic components attached to the carrier directly the at least one surface influencing process is provided to the free side of the components attached to the carrier the partial moulded components will not (or at least less than according the prior art methods) deform (shrink, bend, warp etc.) before the surface influencing process is provided. In this respect the word “directly” should be understood as that the partial uncovered components are not de-attached from the carrier before the surface influencing process is provided. As the partial uncovered electronic components are still attached to the carrier during the surface influencing process the carrier will retain the electronic components and the cured moulding material (substantially) in it moulded shape and thus the shape and dimensions of the partial moulded electronic components and the

adjoining cured moulding material product is well under control. The surface influencing process(es) can thus also be performed with more control leading to a higher precision of the processed products. A further advantage is that the carrier as a product carrier can be used during handling to and in one ore more surface influencing process stations. Only after the surface influencing process(es) took place the partial encapsulated and surface processed electronic components are loosened from the carrier.

The foil as used in the method according the invention is a foil covering the electronic components on the side that is turned away from the carrier and is also referred to as a "anti flash release foil" or "release foil" and keeps the turned sides of the electronic components that are turned away from the carrier, as the name already indicates, free of moulding material ("flash"). In the method according the present invention the foil referred to is to be understood as the electronic components covering foil (so to say the "release foil"). Besides the use of this obligatory ("release") foil it is also possible to use additionally an other type of foil. As for the attachment of a grid of electronic components on a carrier according step A) and the de-attachment of the components according step I) use may be made of an attachment layer with temperature dependent properties. Such an attachment layer (in practise also a foil that is referred to as "attach foil" or "sticky foil") preferably has adhesive properties at moulding temperature but looses it's adhesive properties at some level above moulding temperature. Such temperature sensitivity can be used to attach the grid of electronic components on the carrier during processing step A) at a temperature level below moulding temperature and allows the loosening of the partial encapsulated and surface processed electronic components from the carrier during process step I) by heating the attachment layer for that reason to above the temperature where the attachment layer looses it's adhesive properties. The heating of the attachment layer may for instance be initiated by conductive heating or (UV) radiation or an alternative method of heating. The choice in type of heating may be made dependent on the type of carrier (material) used. It is furthermore important that there are no remains of the attachment layer on the electronic components after they are loosened. The use of an "attach foil" between the carrier and the electronic components may be combined with the obligatory use of the ("release") foil on the side of the electronic components turned away from the carrier.

After the loosing of the partial encapsulated and surface processed electronic components from the carrier according processing step I) the partial encapsulated and surface processed electronic components may be separated. At the moment of separation then already the required accuracy in the surface influencing process(es) is embedded in the electronic components.

In an embodiment of the method during processing step A) the grid of electronic components may be assembled as a silicon wafer. Moulding of the electronic components can thus take place without separation before the moulding. This is also supportive in to realise an enhance control on the product dimensions and shape, and thus to an enhanced product quality.

The grid of electronic components may during processing step A) be attached to a flat carrier plate, preferably a flat metal plate. The metal plate may have such dimensions that it is stable in shape independent on the presence and condition of the moulding material. In ideal circumstances curing of the moulding material on the flat carrier plate is not having a significant effect on the shape (and size) of the carrier plate. Positive results have been realised in using a circular metal carrier plate with oblate sides to enable the carriers to be placed in slotted cassettes. As an alternative also flat carrier plates with other shapes may be used like for instance rectangular carrier plates. A typical thickness for flat carrier plates made out of stainless steel is 1 – 2 mm, however the carrier plates may also be made out of other materials like copper, aluminium, ceramic or glass.

As there is a tendency to use smaller components the encapsulating material fed to the mould cavity during processing step D) has in an embodiment where the encapsulating material is fed as a liquid into the mould via transfer moulding a viscosity of a liquid like water, oil or honey, e.g. a viscosity 1 – 5 Pa.s. (= 2.10^3 – 5.10^3 mPa.s.). Especially the liquid encapsulating material may be fed to the mould cavity by transfer moulding but as alternatives also (pin point) injection moulding of other moulding material supply methods may be used.

The removal from the mould cavity of the partial encapsulated electronic components attached to the carrier (according processing step F) may simultaneously be performed

with the removal of the foil from the partial encapsulated electronic components attached to the carrier (according processing step G). By combining these two processing steps the cycle time can be limited.

For easier removal of the foil from the electronic components (according processing step G) the foil may be heated. Not only the removal process can thus be facilitated but also the chance of diminished product quality due to inadequate foil removal can so be limited.

The at least one surface influencing process provided to the free side of the electronic components according processing step H) may be selected from the group of: lithography, etching, illuminating, imprinting, laser activation and plating. Typical surface influencing processes that may be performed on the free side of the partial moulded electronic components (as well as to the moulding material bordering to the electronic components) is that electric contact wiring and/or points of contact may be provided (e.g. referred to as "fan out") by lithography type of processes. The surface influencing process provided to the free side of the components according processing step H) may thus, as a non-limitative example, be a process applying electric conductive connections from the electronic components to the surface of the encapsulating material. The accuracy of positioning of elements like wiring and/or points of contact is very important in the application of such "surface treated" electronic products.

The present invention enables a higher accuracy in physical product variables and thus in better process control during subsequent use of the partial encapsulated electronic component as produced with the method disclosed above.

The present invention will be further elucidated on the basis of the non-limitative exemplary embodiments shown in the following figures. Herein shows:

figures 1A – 1F various schematic represented electronic components in various stages of the method according the present invention;

figures 2A and 2B two cross sections through a part of a mould for encapsulating electronic components;

figures 3A and 3B two top views of carriers with electronic components; and

figures 4A and 4B two top views of a partially moulded electronic component before and after a surface influencing process took place.

Figure 1A shows an electronic component 1 (e.g. and Integrated Circuit, IC) that is placed on a carrier 2. In figure 1B a foil 3 (e.g. an "anti flash release foil") is placed against the side of the electronic component 1 that is turned away from the carrier 2. In figure 1C is the electronic component 1 shown after a moulding material 4 has been fed in between the carrier 2 and the foil 3. In figure 1D the partial moulded electronic component 1 is freed from the foil 3 that covered the side of the electronic component 1 that is turned away from the carrier 2 to keep the electronic component 1 on one side free from moulding material 4. In figure 1E is shown that on the side of the electronic component 1 that is turned away from the carrier 2 electric contact wiring 5 is applied. In figure 1F the electronic component 1 is shown as released product. Not shown in these figures 1A – 1E is that there may also be an attachment layer present (e.g. an "attach foil" or "sticky foil") between on one side the carrier 2 and on the other side the electronic component 1 and the moulding material 4. E.g. by heating the carrier as shown in figure 1E the electronic component 1 and the moulding material 4 may be loosened from the carrier 2.

Figure 2A shows a cross section through a part of a mould 10 for encapsulating electronic components 11 as part of the method of the present invention. The electronic components 11 are attached to a carrier plate 12 which carrier plate is clamped between an upper mould part 13 and a lower mould part 14. In the lower mould part a mould cavity 15 is left open, which mould cavity 15 holds the electronic components 11. Between the electronic components 11 and the mould cavity 15 a foil 16 is placed so that the sides of the electronic components 11 that are turned away from the carrier plate 12 are protected by this foil 11. The figure also shows a runner 16 that is also kept free in the lower mould part 14 and that connects to the mould cavity 15 to feed a moulding material (not shown in figure 2A) to the mould cavity 15.

Figure 2B shows a cross section through a part of a mould 10 for encapsulating electronic components 11 as shown in figure 2A but now in the situation that a moulding material 27 is fed as a liquid into the mould cavity 15. After at least partial curing (hardening) of the moulding material 17 the upper mould part 13 and a lower

mould part 14 can be moved apart and the carrier plate 12 with partial moulded electronic components 11 can be taken out of the mould 10. The foil 16 may either be removed from the mould 10 with the removal of the carrier plate 12 with partial moulded electronic components 11 or, as an alternative, can remain behind in the lower mould part 14 with the removal of the carrier plate 12 with partial moulded electronic components 11.

Figure 3A shows a top view of a carrier plate 20 holding a wafer 21 with electronic components 22. In figure 3B the carrier plate 20 is shown after a moulding compound 23 has been added to partially cover the electronic components 22. The sides of the electronic components 22 that are turned away from the carrier plate 20 are kept free of the moulding compound 23.

Figure 4A shows a top view of an electronic component 30 with contacts 31 that is partially covered by moulding material 32 as elucidated in relation to the previous figures. In figure 4B the electronic component 30 with contacts 31 as shown in figure 4A is now provided with contact wiring 33, which contact wiring 33 is placed on top of the electronic component 30 and the moulding material 32 surrounding the electronic component 30. The contact wiring 33 is applied with a surface influencing process that took place while the electronic component 30 and the moulding material 32 where still attached to a carrier plate (which is not visible in figures 4A and 4B).

Claims

1. Method for moulding and surface processing electronic components by the successive processing steps of:

A) attaching a grid of electronic components on a carrier;

B) placing a foil against the side of the electronic components opposite to the carrier;

C) enclosing the foil covert electronic components on the carrier with a mould cavity;

D) feeding to the mould cavity an encapsulating material;

E) at least partial hardening of the encapsulating material fed to the mould cavity;

F) removing from the mould cavity the partial encapsulated electronic components attached to the carrier;

G) removing the foil from the partial encapsulated electronic components attached to the carrier;

H) providing at least one surface influencing process to the free side of the components attached to the carrier; and

I) loosening the partial encapsulated and surface processed electronic components from the carrier.

2. Method as claimed in claim 1, **characterized in that** after processing step I) the partial encapsulated and surface processed electronic components are separated.

3. Method as claimed in claim 1 or 2, **characterized in that** during processing step A) the grid of electronic components is assembled as a silicon wafer.

4. Method as claimed in any of the foregoing claims, **characterized in that** the grid of electronic components is during processing step A) attached to a flat carrier plate, preferably a flat metal plate.

5. Method as claimed in any of the foregoing claims, **characterized in that** the encapsulating material fed to the mould cavity during processing step D) as a liquid and has a viscosity of 1 – 5 Pa.s.

6. Method as claimed in any of the foregoing claims, **characterized in that** the encapsulating material is fed to the mould cavity during processing step D) by transfer moulding.

7. Method as claimed in any of the foregoing claims, **characterized in that** processing step F) of removing from the mould cavity the partial encapsulated electronic components attached to the carrier is simultaneously performed with according processing step G) the removal of the foil from the partial encapsulated electronic components attached to the carrier.

8. Method as claimed in any of the foregoing claims, **characterized in that** during processing step G) the foil is heated to remove the foil from the electronic components.

9. Method as claimed in any of the foregoing claims, **characterized in that** at least one surface influencing process provided to the free side of the components according processing step H) is selected from the group of: lithography, etching, illuminating, imprinting, laser activation, plating.

10. Method as claimed in any of the foregoing claims, **characterized in that** at least one surface influencing process provided to the free side of the components according processing step H) is a process applying electric conductive connections from the electronic components to the surface of the encapsulating material.

11. Partial encapsulated electronic component as produced with the method of any of the foregoing claims.

Fig. 1A

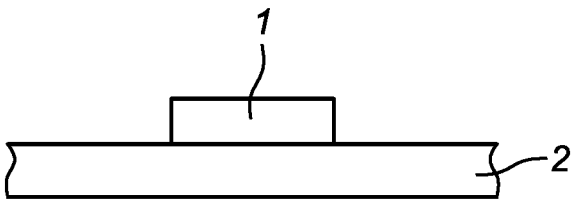

Fig. 1B

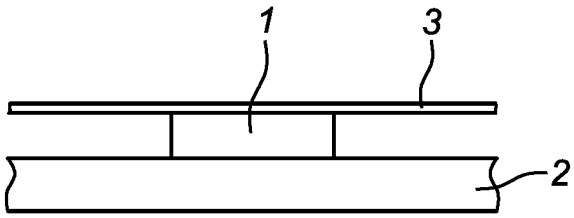

Fig. 1C

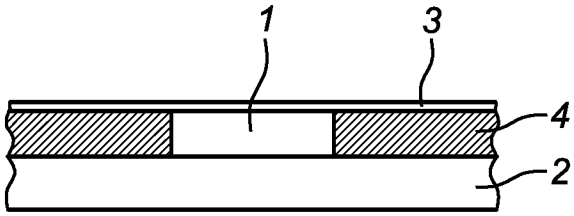

Fig. 1D

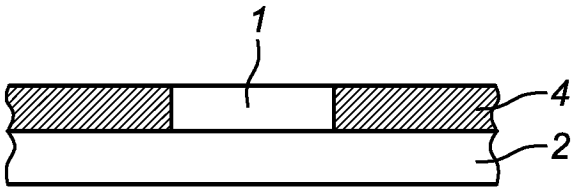

Fig. 1E

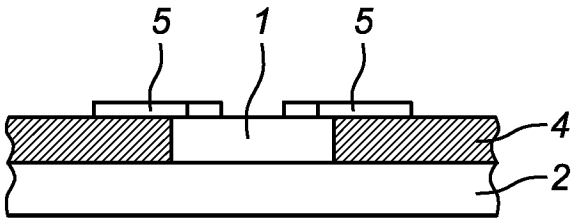

Fig. 1F

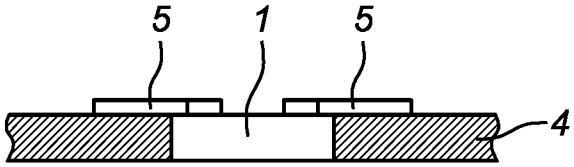

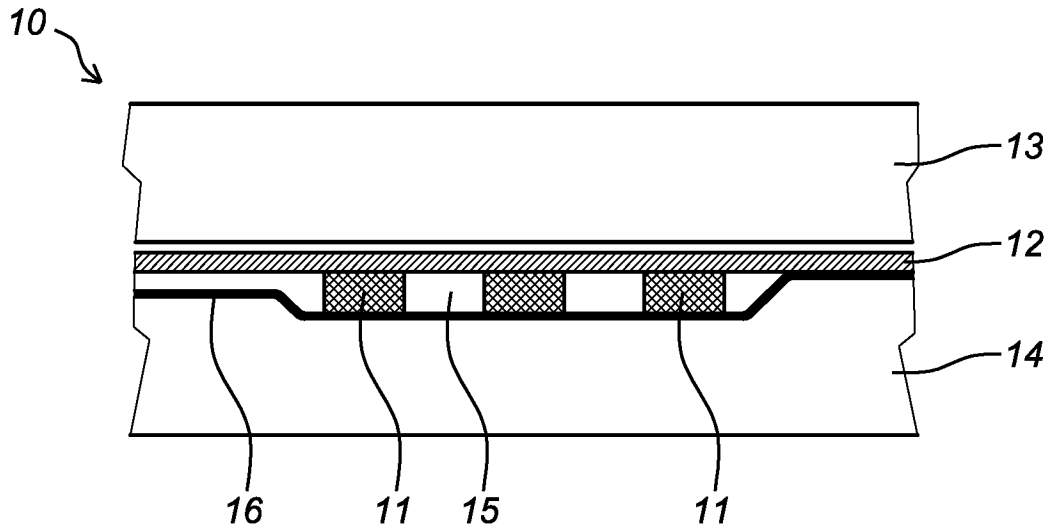

Fig. 2A

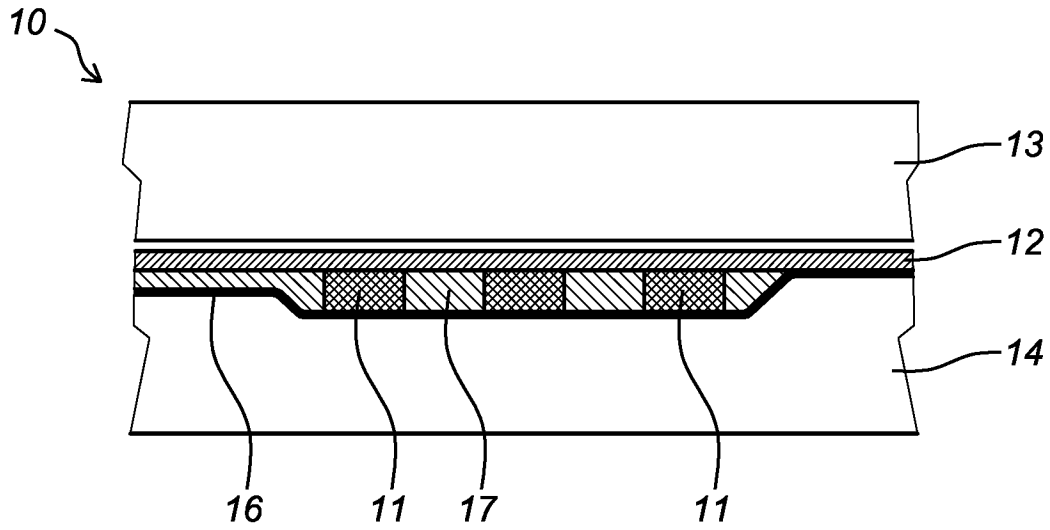

Fig. 2B

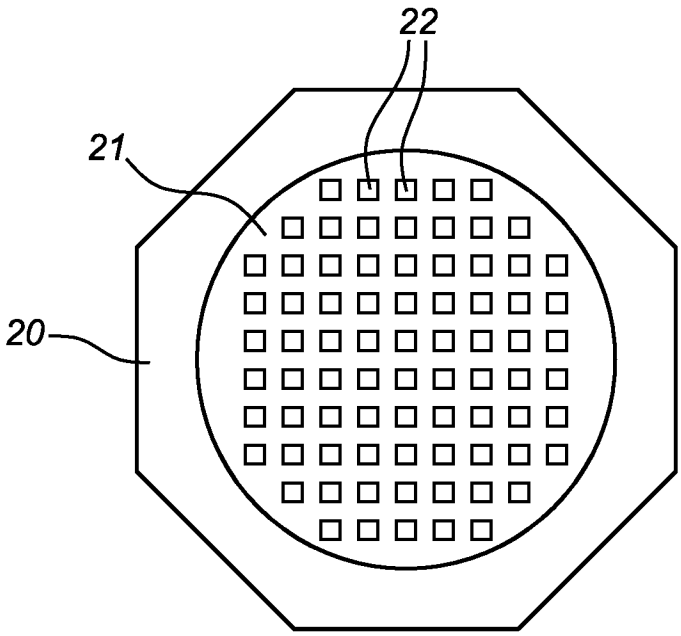

Fig. 3A

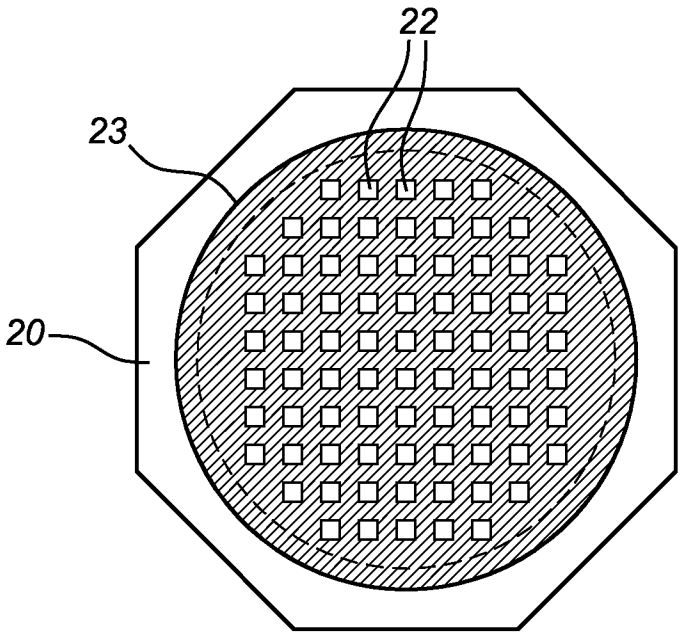

Fig. 3B

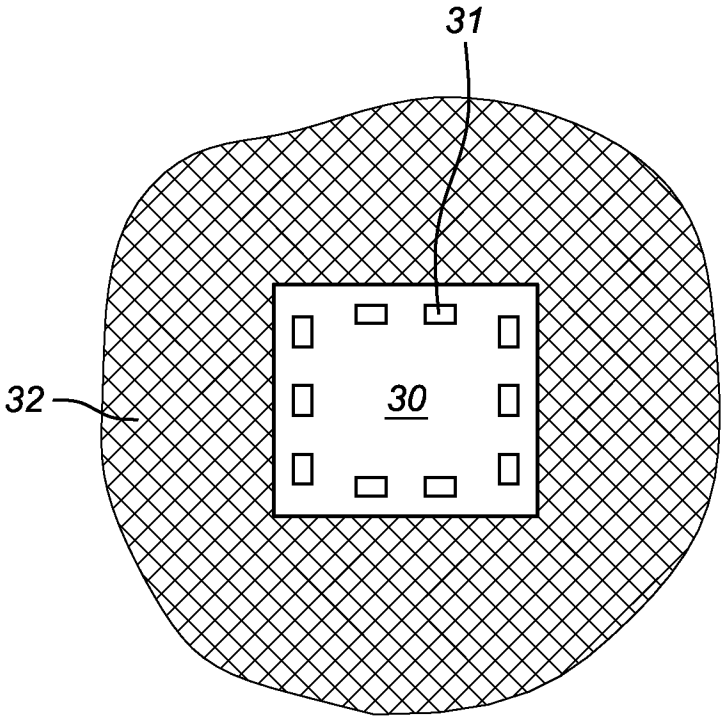

Fig. 4A

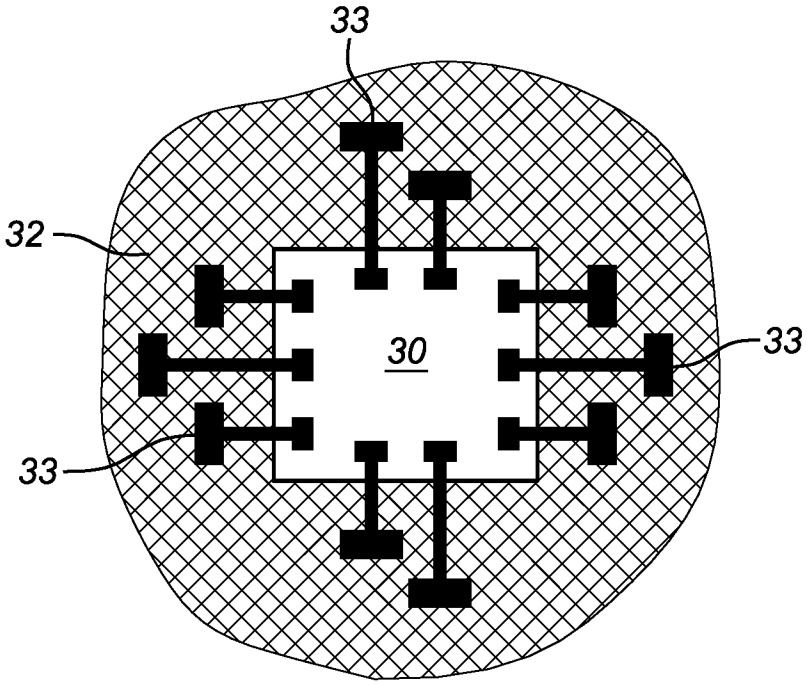

Fig. 4B

INTERNATIONAL SEARCH REPORT

International application No
PCT/NL2014/050658

A. CLASSIFICATION OF SUBJECT MATTER
INV. H01L21/56 B29C45/14
ADD.

According to International Patent Classification (IPC) or to both national classification and IPC

B. FIELDS SEARCHED

Minimum documentation searched (classification system followed by classification symbols)
H01L B29C

Documentation searched other than minimum documentation to the extent that such documents are included in the fields searched

Electronic data base consulted during the international search (name of data base and, where practicable, search terms used)
EPO-Internal, WPI Data

C. DOCUMENTS CONSIDERED TO BE RELEVANT

Category*	Citation of document, with indication, where appropriate, of the relevant passages	Relevant to claim No.
X	US 2011/151623 A1 (TAKAHASHI YOSHIMI [JP]) 23 June 2011 (2011-06-23) figures 5-12 paragraph [0033]	1-11
X	US 2004/017002 A1 (SIEGEL HARRY M [US] ET AL) 29 January 2004 (2004-01-29)	11
A	figures 1A, 1B	1-10
X	US 2006/014328 A1 (SHIMONAKA TOMOYA [JP] ET AL) 19 January 2006 (2006-01-19)	11
A	figure 8 paragraph [0011]	1-10
X	US 2008/038873 A1 (TANIDA KATSUNORI [JP]) 14 February 2008 (2008-02-14)	11
A	figure 1 paragraph [0051]	1-10

-/--

[X] Further documents are listed in the continuation of Box C.

[X] See patent family annex.

* Special categories of cited documents :

"A" document defining the general state of the art which is not considered to be of particular relevance

"E" earlier application or patent but published on or after the international filing date

"L" document which may throw doubts on priority claim(s) or which is cited to establish the publication date of another citation or other special reason (as specified)

"O" document referring to an oral disclosure, use, exhibition or other means

"P" document published prior to the international filing date but later than the priority date claimed

"T" later document published after the international filing date or priority date and not in conflict with the application but cited to understand the principle or theory underlying the invention

"X" document of particular relevance; the claimed invention cannot be considered novel or cannot be considered to involve an inventive step when the document is taken alone

"Y" document of particular relevance; the claimed invention cannot be considered to involve an inventive step when the document is combined with one or more other such documents, such combination being obvious to a person skilled in the art

"&" document member of the same patent family

Date of the actual completion of the international search	Date of mailing of the international search report
6 November 2014	20/11/2014

Name and mailing address of the ISA/	Authorized officer
European Patent Office, P.B. 5818 Patentlaan 2 NL - 2280 HV Rijswijk Tel. (+31-70) 340-2040, Fax: (+31-70) 340-3016	Kuchenbecker, J

2

Form PCT/ISA/210 (second sheet) (April 2005)

INTERNATIONAL SEARCH REPORT

International application No
PCT/NL2014/050658

C(Continuation). DOCUMENTS CONSIDERED TO BE RELEVANT

Category*	Citation of document, with indication, where appropriate, of the relevant passages	Relevant to claim No.
X	US 2005/145328 A1 (LIM SZU S [MY] ET AL LIM SZU SHING [MY] ET AL) 7 July 2005 (2005-07-07)	11
A	figures 5-7 paragraph [0005]	1-10

X	EP 1 085 566 A1 (3P LICENSING BV [NL]) 21 March 2001 (2001-03-21)	11
A	figures 4, 6	1-10

X	EP 1 333 480 A2 (ST MICROELECTRONICS INC [US]) 6 August 2003 (2003-08-06)	11
A	figure 6 paragraph [0026]	1-10

X	US 2004/063234 A1 (TAKASE SHINJI [JP] ET AL) 1 April 2004 (2004-04-01)	11
A	figure 1 paragraph [0029]	1-10

2

INTERNATIONAL SEARCH REPORT

Information on patent family members

International application No
PCT/NL2014/050658

Patent document cited in search report	Publication date	Patent family member(s)	Publication date
US 2011151623 A1	23-06-2011	NONE	
US 2004017002 A1	29-01-2004	NONE	
US 2006014328 A1	19-01-2006	JP 4443334 B2	31-03-2010
		JP 2006027082 A	02-02-2006
		SG 119319 A1	28-02-2006
		TW I279867 B	21-04-2007
		US 2006014328 A1	19-01-2006
		US 2008213947 A1	04-09-2008
US 2008038873 A1	14-02-2008	DE 102007034247 A1	21-02-2008
		JP 2008066696 A	21-03-2008
		US 2008038873 A1	14-02-2008
US 2005145328 A1	07-07-2005	US 2005145328 A1	07-07-2005
		US 2009025882 A1	29-01-2009
EP 1085566 A1	21-03-2001	AU 7971300 A	17-04-2001
		EP 1085566 A1	21-03-2001
		WO 0120644 A2	22-03-2001
EP 1333480 A2	06-08-2003	EP 1333480 A2	06-08-2003
		JP 2003273144 A	26-09-2003
		US 2003143406 A1	31-07-2003
US 2004063234 A1	01-04-2004	JP 4102634 B2	18-06-2008
		JP 2004119803 A	15-04-2004
		US 2004063234 A1	01-04-2004