J. H. McDONAH.

LIFE FLOAT.

APPLICATION FILED AUG. 30, 1918.

1,349,897.

Patented Aug. 17, 1920.

3 SHEETS—SHEET 1.

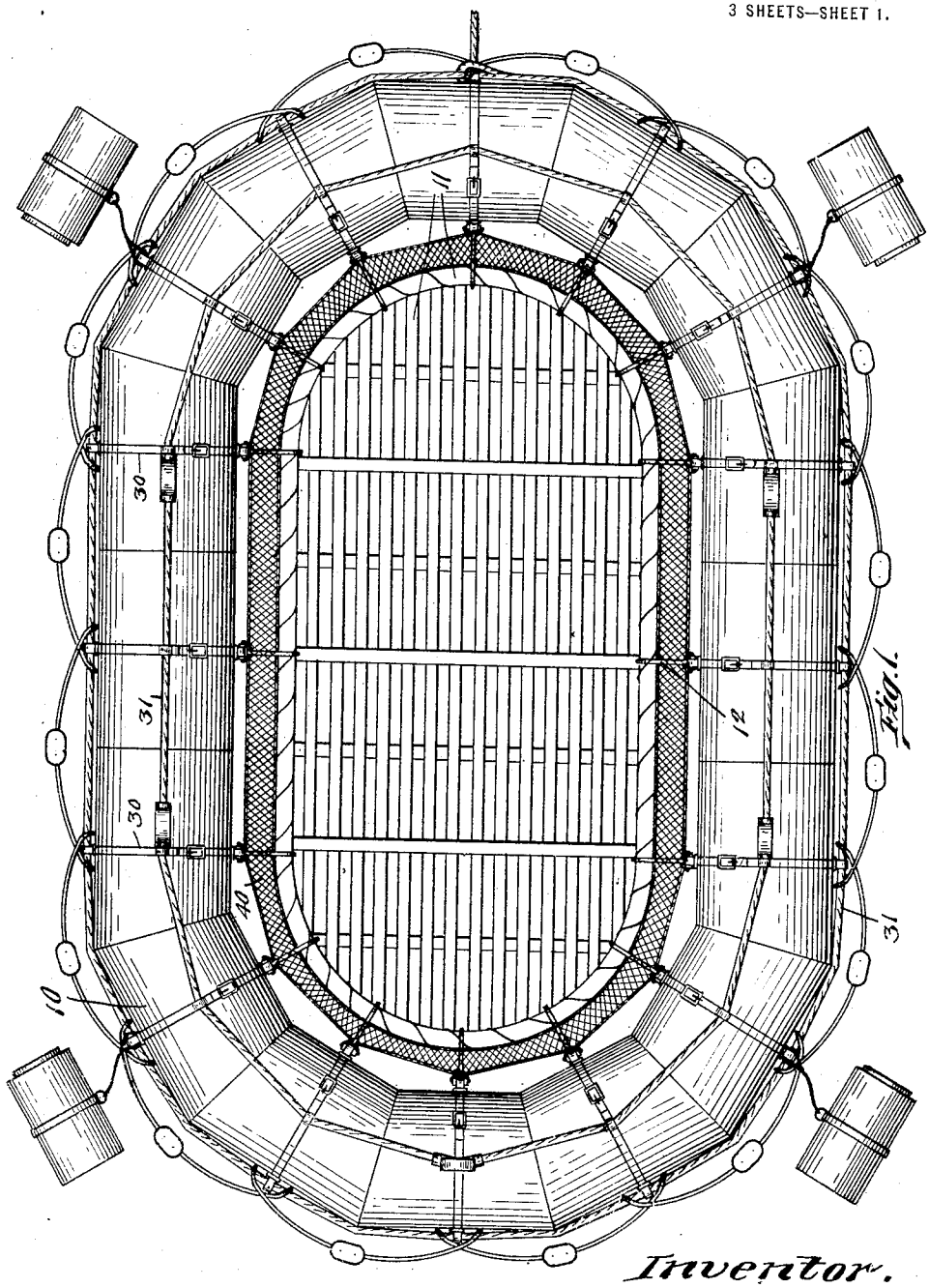

Fig. 1.

Inventor.

John H. McDonah

by

B. J. Noyes Atty

J. H. McDONAH.

LIFE FLOAT.

APPLICATION FILED AUG. 30, 1918.

1,349,897.

Patented Aug. 17, 1920.

3 SHEETS—SHEET 2.

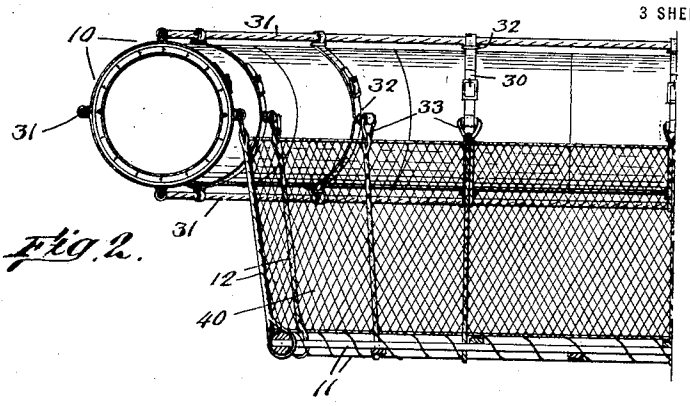

Fig. 2.

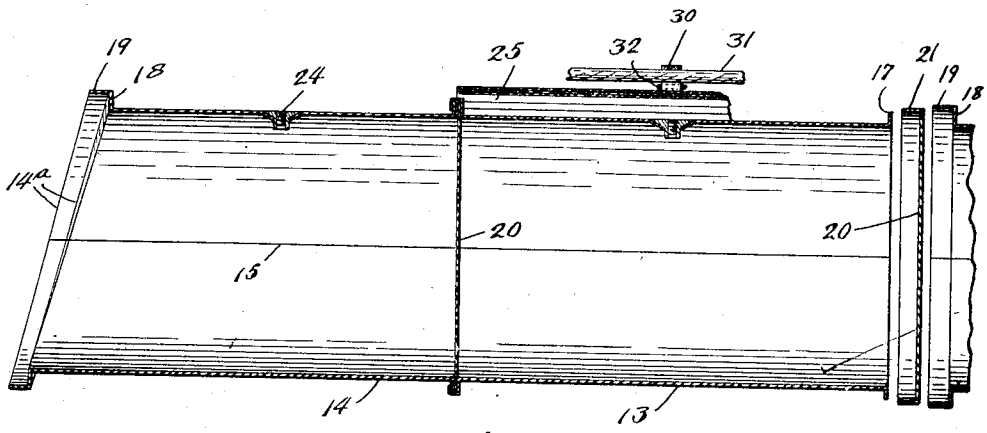

Fig. 3.

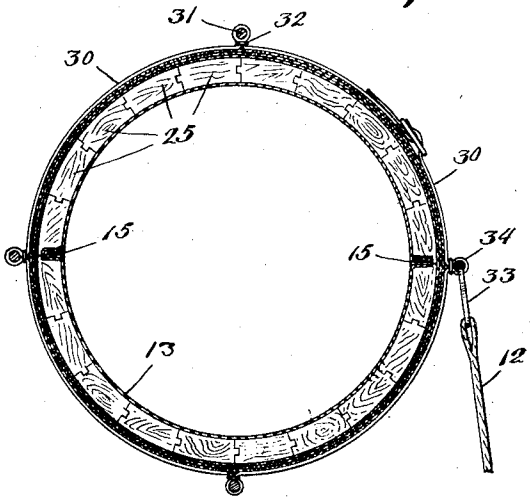

Fig. 4.

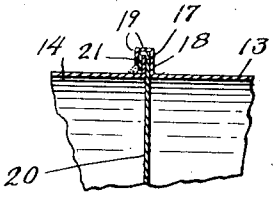

Fig. 5.

Inventor,

John H. McDonah

by

B. J. Noyes Atty

J. H. McDONAH.

LIFE FLOAT.

APPLICATION FILED AUG. 30, 1918.

1,349,897.

Patented Aug. 17, 1920.

3 SHEETS—SHEET 3.

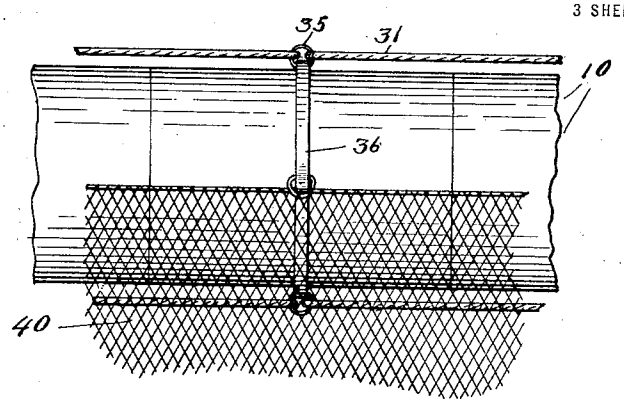

Fig. 8.

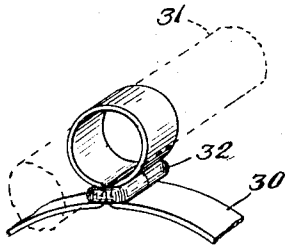

Fig. 6.

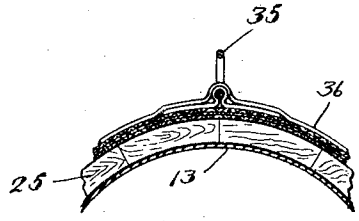

Fig. 7.

Inventor,

John H. McDonah

by

B. J. Noyes Atty

UNITED STATES PATENT OFFICE.

JOHN H. McDONAH, OF BOSTON, MASSACHUSETTS.

LIFE-FLOAT.

1,349,897. Specification of Letters Patent. Patented Aug. 17, 1920.

Application filed August 30, 1918. Serial No. 252,026.

To all whom it may concern:

Be it known that I, JOHN H. McDONAH, a citizen of the United States, residing at Boston, in the county of Suffolk and State of Massachusetts, have invented an Improvement in Life-Floats, of which the following is a specification.

My invention relates to life floats of the type in which the float, or buoyant, member is more or less circular in shape and incloses or surrounds the platform adapted to support the occupants of the float. Life floats of this type are generally constructed with a single hollow buoyant member which, for convenience of manufacture, is formed of a plurality of sections which are united with each other to form the completed buoyant member. The float, or buoyant, member is divided into a plurality of watertight compartments by diaphragms or separating partitions which serve to prevent the entire member flooding in the event of a leak in any particular section thereof.

In the construction of the float it has been universal practice to unite the several sections comprising the float, or buoyant, member by means of lap joints; in which the end of one section is fitted within the end of the adjacent section and the overlapping ends are riveted to unite and secure the adjacent sections. In order to make the joints water-tight, they are soldered or brazed.

In this type of float member, the diaphragms or partitions by which means the member is divided into watertight compartments, are spaced approximately midway between the ends of each section and secured therein by riveting and soldering. In other constructions, the separating diaphragms are placed near the end of each section and secured therein in a similar manner.

The above-described form of joint between the float member sections and the arrangement of the separating diaphragms in the sections has several disadvantages. A comparatively great amount of time is required to assemble the separate sections into the desired form because there is no definite distance that one section may lap or extend within or over the adjacent section and each section must be adjusted with respect to the other sections until the proper shape of the float member is obtained.

Each joint must be riveted to secure the adjacent sections, and thereafter brazed or soldered to secure the joint against leakage. The soldered or brazed lap joint possesses little inherent ability to resist deformation due to shocks and the joint may therefore be easily damaged and open, thereby permitting the flooding of a compartment.

The separating diaphragms, as previously stated, have heretofore been placed at about the middle of the sections or near the ends thereof. Considerable labor is involved in securing the diaphragms in position at about the middle of the sections because of difficulty of access to the diaphragm; and the soldering of the joint between the diaphragm and section has an element of danger for the workman as he must be confined in the section with the acid fumes evolved during the soldering operation.

Less difficulty is experienced in securing the diaphragms in place in the ends of the sections, yet such a position is undesirable for, when the sections with partitions secured therein are assembled to form the completed float member, and the lap joints connecting the adjacent sections are brazed or soldered, the heat of such brazing or soldering is conducted through the metal of the section to the soldered joint sealing the diaphragm and the section and melts the solder, thereby opening the joint and resulting in a leaky compartment.

An object of my invention is in the provision of a life float having a float, or buoyant, member, formed of a plurality of sections, each of which has a flanged end portion for connection with the complemental flanged end portion of the adjacent section, whereby the sections may be rapidly assembled to form the float or buoyant member.

A further object of my invention is in the provision of a separating diaphragm or partition dividing each section into a watertight compartment on the end of each section and in the connection or joint between two adjacent sections which diaphragm or partition will serve as a connecting and separating member between the adjacent sections.

The diaphragm is, or may be, formed with a portion which is adapted to be turned down over the flange on one end of a section to thereby secure said diaphragm on the end of the section and the adjacent section is provided with a portion adapted to be turned down over the downturned

edge of the diaphragm on the other section, thereby securely uniting both sections through the diaphragm.

The down-turned ends or edges of the diaphragm and one section are adapted to terminate close to the main body of the other section and to be soldered or brazed thereto, thereby forming a water-tight joint. By this arrangement, the joints or connections between adjacent sections of the float are able to resist a considerable impact without opening to admit water into the float member as the flange and diaphragm form a rigid wall to prevent distortion of the joint. As the brazed or soldered portion of the joint is at the base of the flange, it is protected from injury by the upstanding flange.

Other objects of my invention reside in the specific construction of the life float and the float, or buoyant, member thereof.

Figure 1 is a plan view of a life float embodying my invention.

Fig. 2 is a partial section, in elevation, of the float of Fig. 1.

Fig. 3 is a detail of certain of the float member sections and the diaphragm, illustrating the method of uniting the adjacent sections and the interposed diaphragms.

Fig. 4 is a cross-section of a section of the float member and the protective covering for the float member.

Fig. 5 is an enlarged detail of the completed joint between two adjacent sections.

Figs. 6 and 7 are details to be referred to.

Fig. 8 is a detail of a modified means for suspending the guard netting between the float member and platform from the float member.

As here shown, the completed and assembled float member 10 is substantially in the form of an oval and incloses a platform 11 which is suspended from the float member 10 by a plurality of ropes or cables 12 a suitable distance below the float member when the life float is in the water.

The float member is formed of a plurality of hollow sections, as 13 and 14, united to form the completed member. Each float member section is formed of two half portions united by means of the longitudinal lock joints 15 to form a complete circular section. Such an arrangement is desirable, especially in the larger sizes of sections, to facilitate the manufacture of the same, although it is obvious that, if desirable, the sections may be formed of a single sheet of material if such construction has advantages. The ends of the lock joint 15 may be in-turned, as indicated, adjacent the body of the section and soldered or brazed thereto, bringing said joint at the root of the flange where it is protected by the body of the flange.

Each float member section is formed with a male flanged end and a female flanged end. On the sections adapted to form the intermediate portions of the float member, the flanges 17 and 18 of said male and female flanged ends respectively, are perpendicular to the longitudinal axis of the section, but on those sections adapted to form the end portions of the float member, the flanges are at an angle to the longitudinal axis of the section, as shown at 14[a].

The diaphragm 20 is formed of sheet material and has its edge turned over, previous to assembly, to form a flange at substantially right angles to the main body thereof, as at 21. The inner diameter of said flange is slightly greater than the diameter of the flange 17 on the float member section and, in the assembly of the float member, the diaphragm is arranged on the end of the section, over said flange 17 and the flanged portion 21 of said diaphragm is turned down over the flange 17 thereby securing the diaphragm to the end of the section.

The end of the section, with the diaphragm secured thereon, is then inserted in the female end of the adjacent section and the portion 19 of the flanged end thereof turned down over the turned-down portion of the diaphragm on the other section, thereby locking the two sections together with the diaphragm between the sections and at the junction of the sections.

The lengths of the down-turned portions 21 and 19 of diaphragm and section respectively are arranged to be such that the edges thereof are not in alinement but are staggered or spaced slightly from each other, as shown more clearly in Fig. 5, whereby solder or brazing material may be run in between the edges of the flanges and the main body of the section and each edge independently secured to the body of the section.

With this form of joint uniting the sections, the joint becomes exceedingly strong as the flanges and diaphragms form a solid wall to resist any shock or impact: furthermore, the soldered or brazed joint is at the base of the flange, in which position it is but slightly affected by any bending or distortion of the flange or sections.

Plugs 24 are detachably secured in the side walls of the sections whereby the tightness of the compartments may be tested.

A protective covering of wood, preferably of a light specific gravity, is arranged to cover each section of the float member. This covering is preferably composed of a number of staves 25 tongued and grooved and cut on a radius equal to that of the section to be covered, or they may be formed without the tongue and groove, as shown in Fig. 7, to form a solid cylinder inclosing each section. Due to its shape, the protective covering possesses considerable strength and, by its strength and resiliency, serves

to protect the walls of the section from damage due to a blow or impact.

One or more layers of canvas are arranged over the wooden cylinder and may be secured to the cylinder after it is formed in place over the sections, or the canvas may be secured to the strips or staves forming the cylinder before the staves are arranged on the sections and the canvas with the attached strips may then be arranged about each section.

The staves 25 of the protective covering for each section extend between the flanges uniting the adjacent sections, which staves are of such a thickness as to extend somewhat above said flanges to protect said flanges from injury. The ends of the cylinders are recessed to receive the flanges and permit the adjacent ends to abut to thereby form a smooth surface on the float member.

The supporting means for the platform 11 includes a plurality of belts 30, which are arranged at suitable intervals on the float member and buckled thereon and ropes 12 are extended between said platform and said belts and secured to said belts. For this purpose each belt is doubled or folded upon itself and the folded portions are extended through the links 32, as shown in Fig. 6, and rings 33 are arranged in the loops, to which rings the ropes are secured.

Other ropes or lines 31 are connected to the float member and extended entirely around it, on the top and bottom and outer diameter thereof and may be extended through loops in the belts 30 as in Fig. 4, or rings 35 may be arranged on and secured to the canvas covering of the float member sections and to which the ropes are or may be secured; the ropes in this case being short lengths extended between the plurality of rings arranged on the float member. This method of connecting the ropes or lines to the rings is more clearly shown in Fig. 7.

A guard net 40 is arranged between the float member and the platform, being secured therebetween in any convenient manner, as, for instance, in Fig. 2 or Fig. 8.

I claim:—

1. A hollow tubular float construction comprising a plurality of independent tubular sections having means by which they are joined together with each section independently water-tight, comprising a flanged male end and a flanged female end on each section, the male and female ends of adjacent sections adapted to be secured together, and a connecting and separating member arranged in the connection between the adjacent sections.

2. A hollow tubular float construction comprising a plurality of independent tubular sections having means by which they are joined together with each section independently watertight comprising outstanding flanged ends on each section, a diaphragm arranged between the sections having its edge turned down over the flange of one section thereby to secure said diaphragm to said section and the flange of an adjacent section turned down over the downturned edge of the diaphragm on the other section thereby to unite said sections through said diaphragm.

3. A hollow tubular float construction comprising a plurality of independent tubular sections having means by which they are joined together with each section independently watertight comprising outstanding flanged ends on each section, a diaphragm arranged between the sections having its edge turned down over the flange of one section thereby to secure said diaphragm to said section and the flange of an adjacent section turned down over the down-turned edge of the diaphragm on the other section thereby to unite said sections through said diaphragm and leak testing plugs in the independent sections.

4. A hollow tubular float construction comprising a plurality of independent tubular sections having means by which they are joined together by each section independently watertight comprising outstanding flanged ends on each section, a portion of the flange of one section being turned down over the flange of an adjacent section thereby to unite the sections, said flanged connection outstanding from the body of the sections, and the edges of the down-turned flange terminating at the base of the flanged connection adjacent the body of the section, and sealing material between said edge and body to form a water-tight connection between the sections, said outstanding flange protecting said sealed connection from damage by impact.

5. A hollow tubular float construction comprising a plurality of independent tubular sections having means by which they are joined together with each section independently water-tight comprising, diaphragms in the connections between the adjacent sections, independent joints uniting each section to the interposed diaphragms, said joints being on the outside of the sections, and each joint separately sealed by a sealing medium to separately seal each section against leakage between adjacent sections.

In testimony whereof, I have signed my name to this specification in the presence of two subscribing witnesses.

JOHN H. McDONAH.

Witnesses:
H. B. Davis,
T. T. Greenwood.