June 18, 1929. J. W. VAN PATTEN 1,718,094

SNOWPLOW

Filed Feb. 27, 1928 2 Sheets-Sheet 1

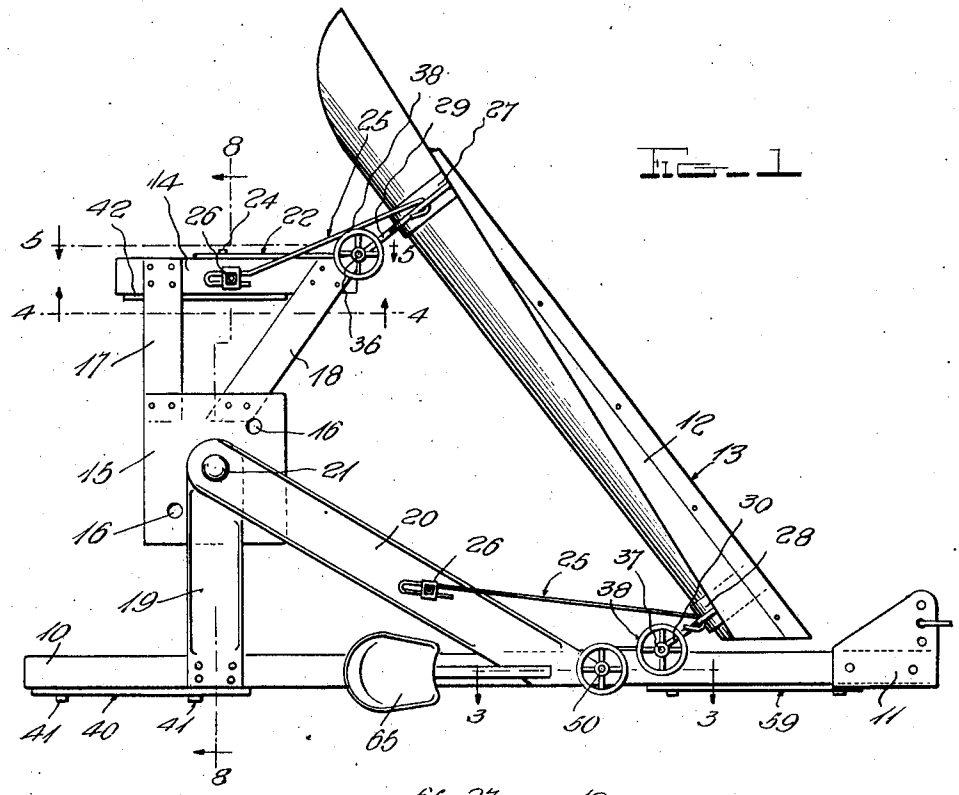

Fig. 1

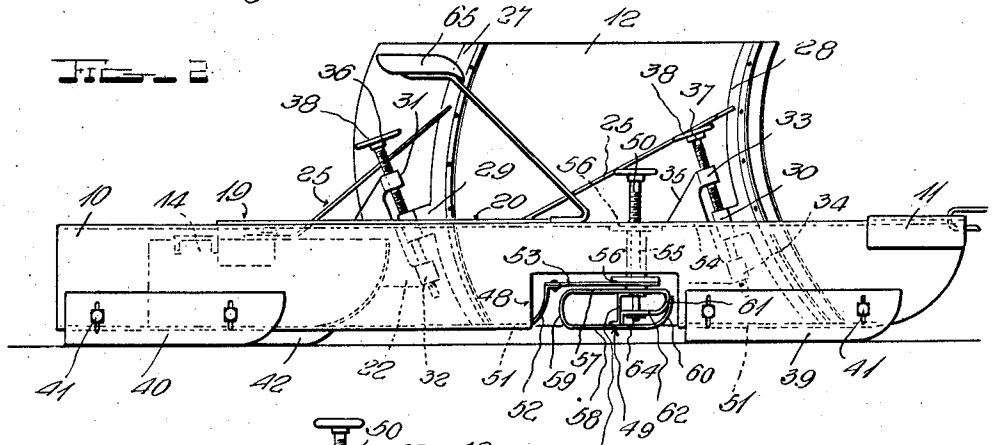

Fig. 2

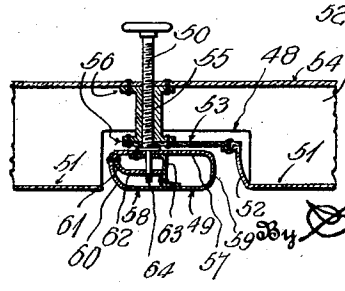

Fig. 3

Witness

Inventor

John W. Van Patten,

By H. B. Williamson & Co

Attorneys

June 18, 1929. J. W. VAN PATTEN 1,718,094

SNOWPLOW

Filed Feb. 27, 1928 2 Sheets-Sheet 2

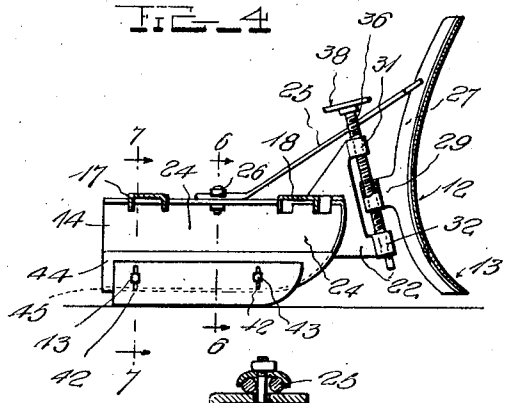

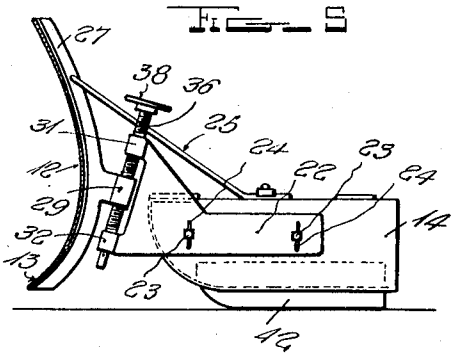

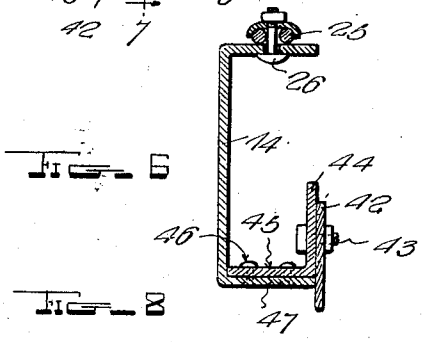

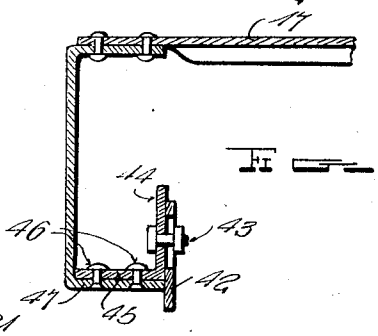

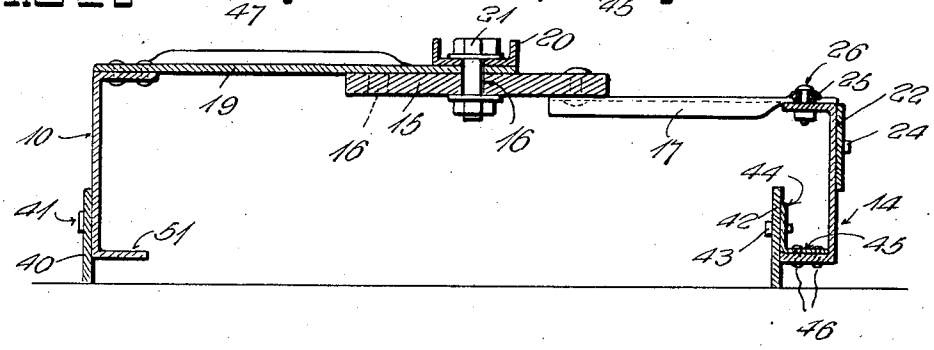

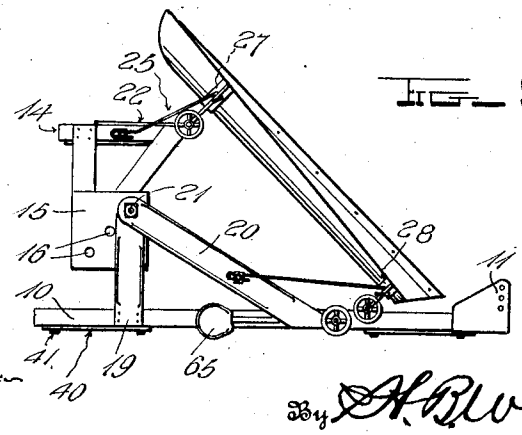

Witness

Inventor

John W. Van Patten,

By H. B. Williamson & Co

Attorneys

Patented June 18, 1929. 1,718,094

UNITED STATES PATENT OFFICE.

JOHN W. VAN PATTEN, OF CHETEK, WISCONSIN, ASSIGNOR OF ONE-THIRD TO BYRON CARTER AND ONE-THIRD TO HARRY E. BECKWITH, BOTH OF CHETEK, WISCONSIN.

SNOWPLOW.

Application filed February 27, 1928. Serial No. 257,375.

The invention relates to a new and improved form of snow plow to be preferably drawn by a team, provision being made whereby the plow is held to its course and cannot slide laterally.

It is one object of the invention to provide a snow plow of the general type having a scraping blade and a pair of runners, in which novel provision is made for permitting the blade to be swung forwardly or rearwardly to vary the width of cut, according to the width of the road or the depth of snow and consequent resistance to pull.

In its preferred form of construction, the plow embodies a relatively long and a comparatively short runner between which the scraping blade extends, and it is a further object to provide unique means for raising the front end of the long runner when the plow is to be turned, thus greatly facilitating the turning operation.

A further object is to provide novel means for mounting the scraping blade and permitting vertical adjustment thereof so that any desired amount of snow may be left upon the roadway.

Yet another aim is to provide a runner construction which may be rather easily and inexpensively manufactured, yet will be efficient and durable.

With the foregoing and minor objects in view, the invention resides in the novel subject matter hereinafter described and claimed, description being accomplished by reference to the accompanying drawings.

Fig. 1 is a top plan view.

Fig. 2 is a side elevation.

Fig. 3 is a fragmentary longitudinal section on line 3—3 of Fig. 1.

Figs. 4 and 5 are detail longitudinal sectional views on the correspondingly numbered lines of Fig. 1.

Figs. 6 and 7 are detail vertical transverse sections on lines 6—6 and 7—7 of Fig. 4.

Fig. 8 is a transverse sectional view on line 8—8 of Fig. 1.

Fig. 9 is a small plan view showing the machine adjusted for a narrow cut.

The preferred details of construction have been illustrated and while these details will be herein specifically explained, it is to be understood that within the scope of the invention as claimed, variations may be made.

The numeral 10 denotes a relatively long runner preferably formed primarily of a length of channel metal, the front end of said runner being provided with an appropriate hitch 11. Hinged to the front portion of the runner 10 is a suitably shaped scraping blade 12 having a steel cutting edge 13, said blade projecting laterally and rearwardly with regard to said runner. Behind the rear end of the blade 12, is a comparatively short runner 14 preferably formed of channel metal, said rear end of the blade 12 being hingedly connected with the front end of said runner 14. Between the two runners 10—14 is a horizontal plate 15 having a plurality of bolt holes 16 at spaced points. Two inwardly converging, transverse bars 17—18, are secured at their outer ends to the runner 14 and at their inner ends to the plate 15. Two similarly converging transverse bars 19—20 are secured at their outer ends to the runner 10. The inner ends of these bars may well overlap each other and lie upon the plate 15 and a bolt 21 is passed through the inner ends of these bars, said bolt being receivable in any of the openings 16. When this bolt is removed, the blade 12 may be swung forwardly or rearwardly to dispose its outer end at the desired distance from the runner 10, thus regulating the width of cut. Then, after proper adjustment has been made, the parts are again secured by reinsertion of the bolt 21 in the proper opening.

The hinge axes of the blade 12 are inclined rearwardly and are parallel with each other, and this relation of axes has a tendency to incline the short runner 14 in one direction or the other, when the blade 12 is swung forwardly or rearwardly. To overcome this tendency, instead of hinging the outer or rear end of the scraper 12 directly to the runner 14, I hinge it to a horizontally elongated plate 22 as shown most clearly in Figs. 1 and 5, the plate being connected with the runner by bolts 23 passing through vertical slots 24. When these bolts are loosened, swinging of the blade 12 will incline the plate 22 somewhat, but the runner 14 will remain horizontal. Then, after proper setting has been effected, these bolts are again tightened. Appropriate braces 25 are provided for the blade 12, the rear ends of these braces being adjustably secured as at 26, to permit any necessary movements of them during setting of the plow with the blade 12 at one angle or another.

In the present showing, two curved rein-

forcing bars 27—28 are secured to the rear side of the blade 12 at its outer and inner ends respectively, and the braces 25 are connected with the upper portions of these bars. Between their ends, the bars 27—28 are provided with rearwardly projecting lugs 29—30 respectively. Lug 29 is received between and is spaced from upper and lower forwardly projecting lugs 31—32 on the plate 22. Lug 30 is similarly received between vertically spaced lugs 33—34 on a plate 35 which is secured to the runner 10. Vertical screws 36—37 are swiveled in the lugs 31—32 and 33—34 respectively, and are threaded through the lugs 29—30, said screws having hand wheels or the like 38. By rotating these hand wheels, the entire blade 12 is raised or lowered as required.

Front and rear plates 39—40 contact with the outer side of the runner 10 and project downwardly below the same to bite into the snow and hold said runner against lateral slippage, said plates being preferably secured to the runner by appropriate bolt and slot connections 41. A similar plate 42 is disposed at the inner side of the channel metal runner 14 and is secured by a bolt and slot connection 43, to the vertical flange 44 of an angle metal bar which extends longitudinally of said runner 14, in opposed relation with the vertical web of the latter. The base 45 of this angle metal bar is secured by rivets or the like 46 upon the base flange 47 of the runner 14.

Near its front end, the lower edge of the runner 10 is formed with a longitudinally extending notch 48. Within this notch, is a turning shoe 49 which is swiveled on the lower end of a vertical screw 50 carried by the runner 10. Normally, shoe 49 is confined totally within the notch 48. When the entire plow is to be turned around or otherwise turned however, the screw 50 is operated to force the shoe 49 below the lower edge of the runner, thus moving at least the front portion of the latter and the front plate 39 out of engagement with the snow. The plow may then be easily turned and the shoe 49 will swing about the screw 50 as may be necessary. After turning, screw 50 is again operated to restore the shoe 49 to its normal position within the notch 48.

In forming the notch 48, I cut away a portion of the vertical web of the channel metal bar, of which the runner 10 is formed, and I cut away a length of the base flange 51 of this bar, of less length however than the notch, leaving a portion 52 of said base flange projecting beyond the rear edge of said notch. This base flange portion is curved upwardly as shown at 52 and is riveted or otherwise secured to the rear end of a horizontal plate 53. Between the front portion of this plate and the top flange 54 of the runner 10, is a vertical sleeve 55 which is preferably flanged at its ends at 56 and riveted or otherwise secured to said flange 54 and plate 53. This flange and plate are formed with openings alined with the sleeve, and the screw 50 passes through said openings and sleeve, being threaded into the latter. As above described, the shoe 49 is swivelled upon the lower end of this screw and when the shoe is idle, it may well contact tightly with the lower side of the plate 53.

I prefer to form the shoe 49 principally of a single metal bar. This bar is bent between its ends to provide upper and lower horizontal portions 57—58, integrally connected at their rear ends by a spacing portion 59. The front end 60 of the portion 58 is curved upwardly and the front end of the portion 57 is bent downwardly at 61 and secured to said end 60, being then extended rearwardly as at 62 and secured to a vertical strut 63 which is also secured to the portions 57—58. Suitable openings are provided in the portions 57—62 to receive the lower end of the screw 50 and withdrawal of said screw from said openings may be prevented by a cotter pin or the like 64 passed through said screw, for instance, under the bar portion 62.

Preferably, the runner 10 is provided with an appropriate seat 65 for the driver, as his weight assists materially in holding the plow on its course.

On account of the excellent results obtainable from the various features of construction herein disclosed, these features are preferably followed. However, within the scope of the invention as claimed, variations may be made, as above stated.

I claim:—

1. A snow plow comprising a runner, a diagonal scraping blade extending laterally and rearwardly from said runner and hinged thereto for swinging to different positions according to the width of cut desired, a second runner behind the rear end of said blade and hinged thereto to remain in parallel relation with the first named runner when the blade is in any position, and adjustable means extending between and connected with said runners for holding them against relative movement after setting of the blade at the desired position.

2. A snow plow comprising a runner, a diagonal scraping blade extending laterally and rearwardly from said runner and hinged thereto for swinging to different positions according to the width of cut desired, a second runner behind the rear end of said blade and hinged thereto to remain in parallel relation with the first named runner when the blade is in any position, transverse members secured at their outer ends to said runners and disposed in overlapping relation with each other, and means adjustably securing said overlapped portions of said transverse members together to hold said runners against relative

movement after setting of the blade at the desired position.

3. A snow plow comprising a runner, a diagonal scraping blade extending laterally and rearwardly from said runner and hinged thereto for swinging to different positions according to the width of cut desired, a second runner behind the rear end of said blade and hinged thereto to remain in parallel relation with the first named runner when the blade is in any position, a horizontal plate disposed between said runners and having a plurality of spaced openings, a pair of inwardly converging transverse bars secured to one of said runners and to said plate, a second pair of transverse bars secured to the other runner and overlapping said plate, and means insertable through any of said openings and securing said second pair of bars to said plate, whereby to hold the runners against relative movement after setting of the blade at the desired position.

4. A snow plow comprising a runner, a scraping blade extending laterally and rearwardly from said runner and swingable to different positions according to the width of cut desired, a second runner behind said blade, means hinging said blade to one of said runners on a rearwardly inclined axis, a vertical plate lying against one side of the other runner, means securing said plate to said other runner and permitting vertical movement of said plate when the aforesaid blade is to be swung in one direction or the other, and means hinging said blade to said plate on an axis parallel with the first named hinge axis.

5. In a snow plow, spaced runners each provided with an upper and a lower bearing, two substantially vertical screws swiveled in said bearings, a scraping blade extending between said runners, and rearwardly projecting lugs on said blade received between said upper and lower bearings and having threaded engagement with said screws.

6. In a snow plow, a relatively long runner, a comparatively short runner, and a scraper extending laterally and rearwardly from the long to the short runner, the front portion of said long runner having a longitudinally extending notch in its lower edge, a turning shoe normally confined within said notch, and mounting means for said shoe embodying a vertical pivot for the latter and means for depressing said shoe below the lower surface of the long runner.

In testimony whereof I have hereunto affixed my signature.

JOHN W. VAN PATTEN.