Feb. 21, 1961 H. FORWALD 2,972,666

AIR BLAST CIRCUIT BREAKERS WITH BREAKING GAPS IN COMPRESSED AIR CONTAINERS CARRIED BY INSULATOR PILLARS

Filed June 19, 1958

2 Sheets-Sheet 1

Fig.1

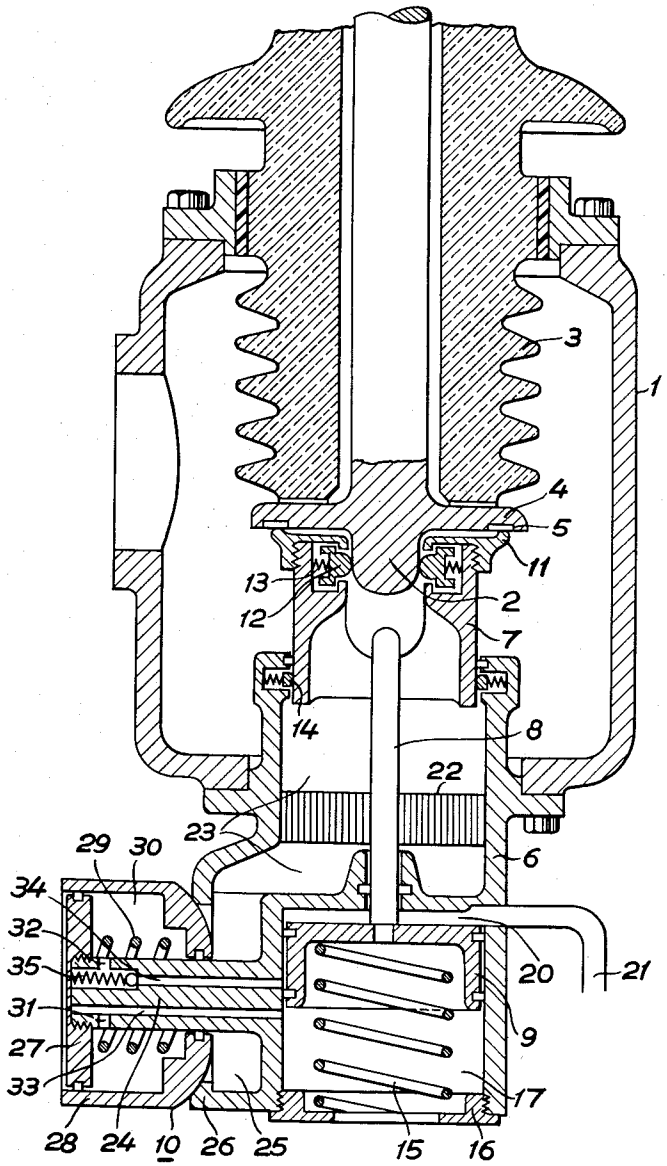

INVENTOR.
HAAKON FORWALD
BY
Bailey, Stephens & Huettig
ATTORNEYS

Feb. 21, 1961 H. FORWALD 2,972,666

AIR BLAST CIRCUIT BREAKERS WITH BREAKING GAPS IN COMPRESSED AIR CONTAINERS CARRIED BY INSULATOR PILLARS

Filed June 19, 1958

2 Sheets-Sheet 2

Fig.2

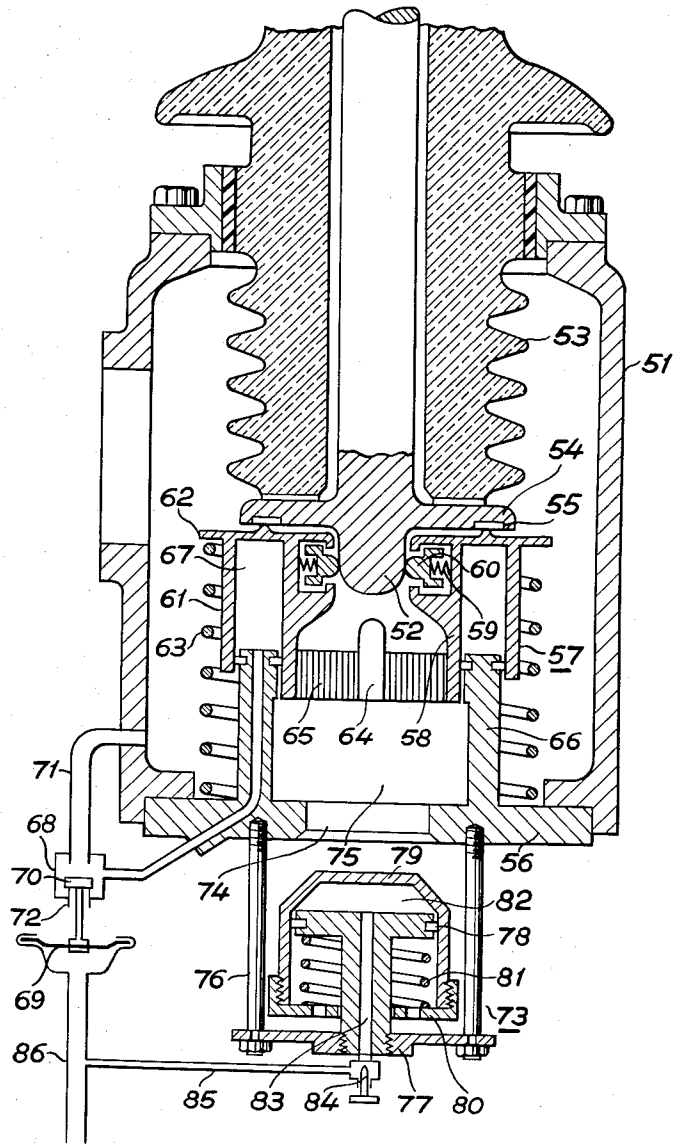

INVENTOR.
HAAKON FORWALD
BY
Bailey, Stephens & Huettig
ATTORNEYS

United States Patent Office 2,972,666
Patented Feb. 21, 1961

2,972,666

AIR BLAST CIRCUIT BREAKERS WITH BREAKING GAPS IN COMPRESSED AIR CONTAINERS CARRIED BY INSULATOR PILLARS

Haakon Forwald, Ludvika, Sweden, assignor to Allmanna Svenska Elektriska Aktiebolaget, Vasteras, Sweden, a corporation of Sweden

Filed June 19, 1958, Ser. No. 743,166

Claims priority, application Sweden June 29, 1957

4 Claims. (Cl. 200—148)

The present invention concerns a compressed air circuit breaker with breaking gaps arranged in compressed air containers permanently filled with air under pressure and carried by insulating pillars. Each container contains generally one breaking gap. The stationary contact of said breaking gap is carried by a leading-through insulator inserted in one wall of the container, whereas its movable contact, being a nozzle contact, is arranged together with an operating mechanism in a mechanism housing inserted in the wall of the container opposite to the wall carrying the leading-through insulator. An air blast valve located in the close vicinity of the breaking gap contains a sealing member rigidly attached to the movable contact.

The circuit breaker according to the invention is mainly characterized in that an outlet valve coupled in series with the blast valve is arranged to block after an interruption an outlet opening from the air blast channel and to hold this outlet opening blocked until the breaking gap has been closed after operation of the circuit breaker.

The valve member of the outlet valve consists suitably of a movable operating cylinder in which there is a piston which is stationary in relation to a valve seat. In one form of the invention there will thus be a space limited by the operating cylinder and the piston of the cylinder, which space is by two channels in communication with an operating cylinder for an operating piston joined with the movable contact, which channels terminate in the latter of said cylinders in such a way that the outlet valve is controlled by the operating piston of the movable contact. One of these channels should, when the breaking gap is closed, terminate in the space on that side of the operating piston which is in permanent communication with the open air, whereas the other channel should, when the breaking gap is opened, terminate in the space on that side of the piston which then is filled with operating air under pressure. The operating cylinder of the outlet valve is suitably attached to the operating cylinder of the movable contact over a non-return valve, which prevents the blocking valve from being opened before the breaking gap has been closed. In another design of the valve the said space formed by the operating cylinder and the piston is over a throttle valve in communication with the operating air pipe line for the movable contact. A cooling grid is suitably arranged in the outlet channel for the extinguishing air between the movable contact and the outlet valve. The outlet area of the valve can then be made smaller than the operating area of the cooling grid, because the volume of the gases decreases when they are cooled by the cooling grid.

The invention makes it possible in circuit breakers with an air blast valve in close vicinity of the breaking gap, having the movable valve member carried by the movable contact of the breaking gap, to obtain an insulating distance which is under pressure when the breaker is open, in spite of the fact that atmospheric pressure prevails in the outlet channel for the extinguishing air, when the

circuit breaker is closed. This is a very important advantage, because the breaking mechanism for circuit breakers of said kind with a valve member carried by the movable contact may be made very simple and reliable in operation. Another advantage is that the outlet valve can be entirely controlled without separate operating air pipe lines and can be made in a very simple manner entirely dependent upon the position of the movable contact, so that it is guaranteed that the outlet valve closes the outlet opening only when the breaking gap is entirely open.

In the drawings:

Fig. 1 is a cross-section through one form of the invention; and

Fig. 2 is a cross-section through a different form.

In Fig. 1, **1** designates a container permanently filled with compressed air and carried by an insulator pillar not shown on the drawing, in which container a breaking gap is enclosed. The stationary contact **2** of the breaking gap is carried by a leading-through insulator **3** inserted in one wall of the container **1**, and is provided with an annular flange **4**, in which a sealing ring **5** is inserted. In the wall of the container opposite the leading-through insulator a mechanism housing **6** is inserted, in which a movable nozzle formed contact piston **7** and an operating piston **9**, joined with it by the operating rod **8**, and a blocking valve **10** are arranged. The movable contact piston carries at its upper part a valve disc **11** with a central opening, which valve disc, in the closed position of the breaking gap, is pressed against the sealing ring **5**, and contact blocks **12** being radially inwardly actuated by springs **13**, which blocks form a nozzle contact. **14** designates spring loaded contacts for transmitting current from the mechanism housing **6** to the movable contact **7**. A spring **15** which rests on the bottom **16** in the operating cylinder **17** and against the operating piston **9**, acts on the movable contact **7** in closing direction. The space **20** above the operating piston **9** is via an operating air line **21** in communication with an operating valve, not shown on the drawing. **22** designates a cooling grid arranged in an air blast channel **23** between the movable contact piston **7** and the blocking valve **10**. The mechanism housing **6** is provided with a cylindrical stem **24** which projects from the wall of the operating cylinder **17**, and is concentric with the outlet opening **25** and the valve seat **26** of the blocking valve. **27** is a disc attached to the outermost end of the cylindrical stem **24**. The valve member **28** of the blocking valve **10** is actuated in the closing direction by a spring **29**, which has for its single purpose to hold the valve member **28** in contact with the valve seat **26**, when the circuit breaker is in its closed position. The pressure in the channel **23** will then be equal to or slightly exceed the atmospheric pressure. The space **30** in the valve member **28** is through openings **31** and **32** in communication with channels **33** and **34**, which terminate on different levels in the operating cylinder **17**. In the channel **34** there is a non-return valve **35**. There is nothing to prevent the valve member **28** of the blocking valve being actuated by a spring force acting on the valve member **28** in opening direction, so that the blocking valve will be entirely open when the breaker is closed.

The circuit breaker with a breaking chamber according to the design illustrated in Fig. 1 acts in the following way. The breaking gap is opened when compressed air is delivered to the space **20** above the operating piston **9** through the operating air line **21**. When the operating piston **9** and the movable contact joined with it are moved downwards, the blast valve, formed by the valve disc **11** and the flange **4**, is opened and extinguishing air streams from the container through the nozzle in the movable contact piston **7** into the outlet channel **23**, where normal atmospheric pressure prevails. When the pressure in the

outlet opening rises, the blocking valve is immediately opened as the air flow moves the valve member **28** aside. When the operating piston has reached its lower position, its upper part has passed the end of the channel **34** in the cylinder **17**, so that compressed air streams from the space **20** through the channel **34**, the non-return valve **35** and opening **32** to the space **30**. Under the influence of the pressure in this space the valve member **28** is moved to the right and closes the outlet opening **25**, so that the extinguishing air flow ceases. The breaking gap is closed when the space **20** above the operating piston **9** is evacuated through the operating air line **21**. The spring **15** will then move the movable contact to its upper position so that the blast valve is also closed. When the operating piston **9** has reached its upper position, the lower part of the piston will be above the end of the channel **33** in the cylinder **17**. The space **30** will then be in communication with the open air so that air can escape from this space and the valve member **28** will thus be actuated only in one direction against its valve seat by the spring **29**. The air in the outlet channel **23** will then flow out through the blocking valve.

In Fig. 2, **51** designates a container permanently filled with compressed air and enclosing a breaking gap, said container being carried by the insulating pillar, not shown on the figure. The stationary contact **52** of the breaking gap is carried by a leading-through insulator **53** inserted in one wall of the container, said insulator being provided with an annular flange **54**, in which there is a tightening ring **55**. In the part of the container wall opposite the leading-through insulator a mechanism housing **56** is inserted in which a nozzle formed contact piston **57** is movably arranged. This contact piston is provided with an inner cylindrical part **58** carrying contact blocks **60** actuated by springs **59**, which blocks form a nozzle contact, and with an outer cylindrical part **61** concentric with this contact, these two parts projecting from the annular plate **62** forming the movable valve disc in the air blast valve. **63** is a spring actuating the movable nozzle contact in closing direction. In the outlet channel in the movable contact piston there is an arcing contact **64** and a cooling grid **65**. The mechanism housing is provided with a cylindrical part **66**, which projects in between the cylindrical parts **58** and **61** of the movable contact piston, so that a space **67** is formed that is separated from the part of the container which is filled with compressed air. This space communicates with a valve housing **68**, which by means of the valve member **70** operated by the membrane **69**, may be alternatively in communication with the compressed air container through the pipe line **71** or with the open air through the outlet opening **72**. Attached to the valve housing **56** is a blocking valve **73** with a valve seat arranged at the outlet opening **74** on the outer part of the extinguishing air channel **75**. The blocking valve contains a bottom plate **77** attached to the mechanism housing **56** by means of bolts **76**, which carries a stationary piston **78**. **79** is a movable valve member provided with a bottom **80**. Between the bottom **80** and the piston **78** there is a spring **81** actuating the valve member in opening direction. The space **82** above the piston **78** is via the channel **83**, a throttling device **84** and pipe line **85** in communication with the operating air line **86** for operating the valve member **70** joined with the membrane **69**.

The circuit breaker with the breaking chamber shown in Fig. 2 acts in the following way. When the circuit breaker shall be opened, compressed air is delivered to the operating pipe line **86**, so that the membrane **69** lifts the valve member **70** to a tightening contact with the end of the pipe line **71** in the valve housing **68**. Thereby the compressed air in the space **67** will flow out and thus the movable contact piston **57** will be moved downwards due to the influence of the air pressure in the container. Then the breaking gap as well as the blast valve will be opened. Simultaneously air flows through line **85**, throttle valve **84** and channel **83** to the space **82**. When the pressure in the space rises, the valve member **79** is lifted and closes, after a time lag determined by the throttling device **84**, the outlet opening **74**, so that the flow of extinguishing air is interrupted. The time for the closing of the blocking valve is so chosen that an interrupting arc certainly will be extinguished before the closing.

The breaking gap is closed by evacuating the operating air line **86** so that the valve member **70** will go back to the position shown in the figure. Air flows out from the compressed air container into the space **67**. The movable contact is lifted under the influence of the spring **63** and the pressure in the space **67**, so that the breaking gap and blast valve are closed. Simultaneously air flows out from the space **82** through the throttling device **84**. The blocking valve is then opened after a certain time by the spring **81**.

I claim as my invention:

1. Air blast circuit breaker with containers permanently filled with compressed air carried by insulating pillars and enclosing a breaking gap the stationary contact of which is carried by a leading-through insulator inserted in one wall of the container and its movable contact being a nozzle contact, which together with operating members is arranged in a mechanism housing inserted in the wall of the air container opposite the leading-through insulator, comprising an air blast valve consisting of a valve member joined with the said nozzle formed contact, which valve member, when the breaking gap is closed, rests tightly against the stationary contact, and an outlet valve which is arranged to block, after an interruption, an outlet opening in a gas escape channel leading from said blast valve and to hold this outlet opening blocked until the breaking gap has been closed after closing the circuit breaker.

2. Circuit breaker according to claim 1, characterized in that an operating cylinder for the air blast valve is, via two channels, in communication with an operating cylinder for an operating piston joined with the movable contact, said channels terminating in the operating cylinder in such a way that the outlet valve is controlled by the operating piston.

3. Circuit breaker according to claim 2, characterized in that the operating cylinder of the outlet valve is connected to the operating cylinder for the movable contact over a back valve which prevents the outlet valve from being opened before the breaking gap is closed.

4. Circuit breaker according to claim 1, characterized in that the operating cylinder of the outlet valve is connected to the operating air line for the movable contact over a throttle valve which determines the moment of closing the outlet valve.

References Cited in the file of this patent

UNITED STATES PATENTS

2,665,351	Forwald	Jan. 5, 1954
2,724,751	Forwald	Nov. 2, 1955
2,766,348	Forwald	Oct. 9, 1956

FOREIGN PATENTS

322,589	Italy	Nov. 6, 1934
660,394	Germany	May 21, 1938
93,212	Sweden	Nov. 5, 1938
512,400	Great Britain	Sept. 1, 1939