March 16, 1965 V. K. WEXLER 3,173,188

TOBACCO SMOKE FILTER FORMATION

Filed Nov. 3, 1961 2 Sheets-Sheet 1

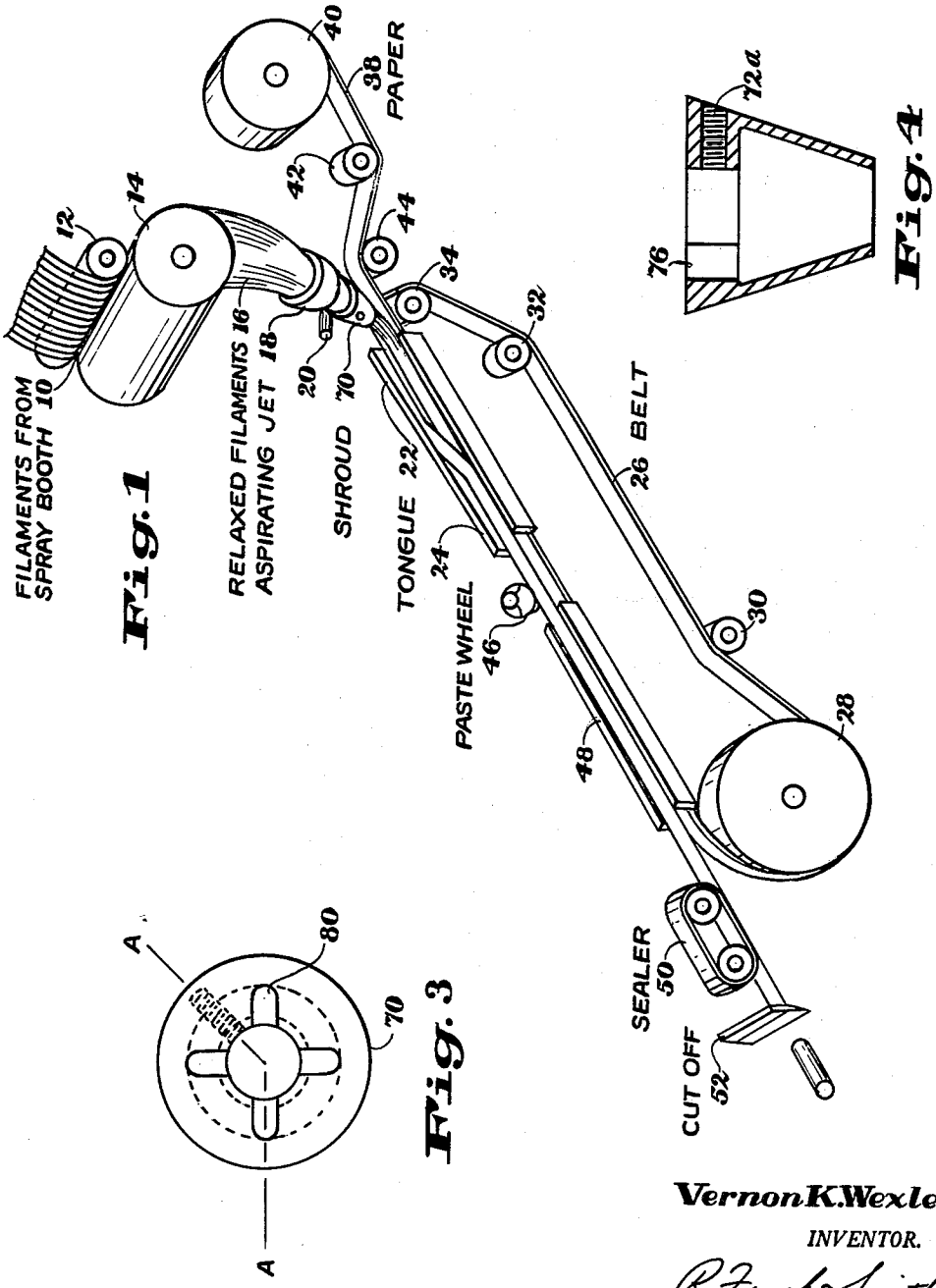

Fig. 1

Fig. 4

Fig. 3

Vernon K. Wexler
INVENTOR.
BY R. Frank Smith
Abram W. Hatcher
ATTORNEYS

March 16, 1965 V. K. WEXLER 3,173,188

TOBACCO SMOKE FILTER FORMATION

Filed Nov. 3, 1961 2 Sheets-Sheet 2

Fig. 2

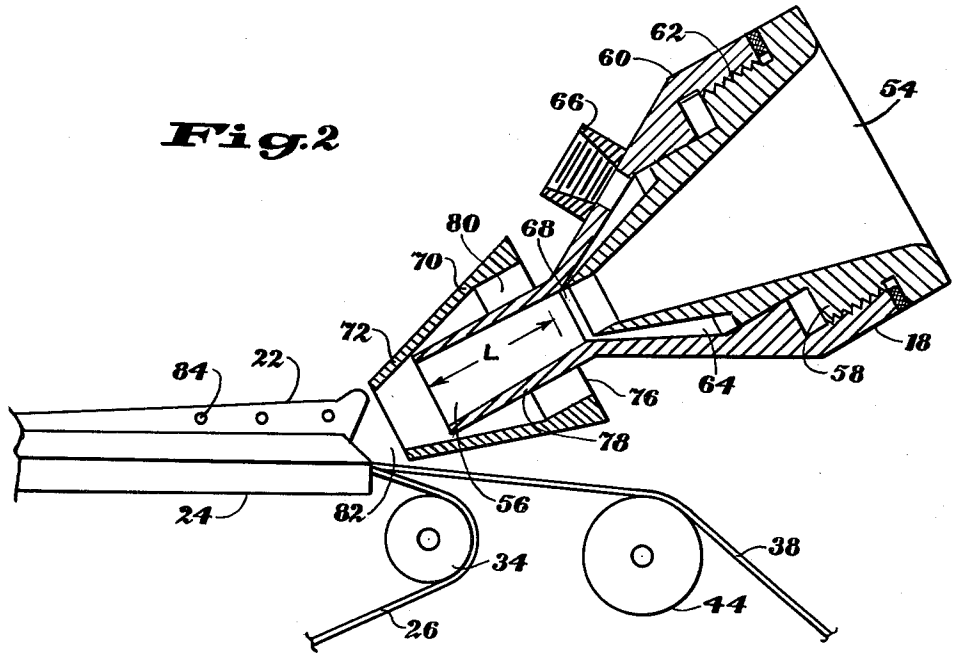

Fig. 5

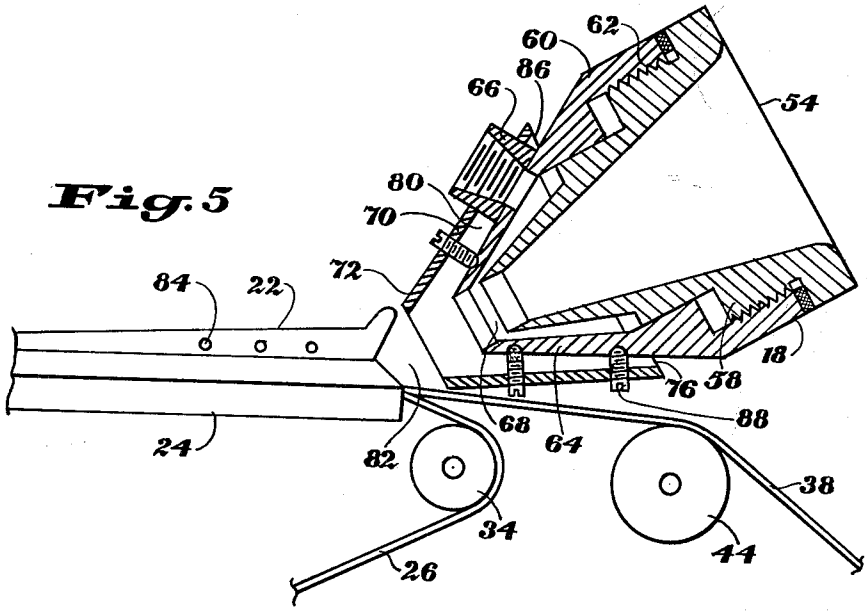

VernonK.Wexler
INVENTOR.
BY R. Frank Smith
Abram W. Hatcher
ATTORNEYS

United States Patent Office 3,173,188
Patented Mar. 16, 1965

3,173,188

TOBACCO SMOKE FILTER FORMATION

Vernon K. Wexler, Kingsport, Tenn., assignor to Eastman Kodak Company, Rochester, N.Y., a corporation of New Jersey

Filed Nov. 3, 1961, Ser. No. 150,099
7 Claims. (Cl. 28—1)

This invention relates to a method and apparatus of forming crimped bloomed continuous filament tow into tobacco smoke filters. More particularly this invention relates to a method and apparatus for forming a low denier per filament, highly crimped tow substantially uninterruptedly into filter rods for cigarette tips.

This application is a continuation-in-part of my co-pending application Serial No. 761,602, now U.S. Patent No. 3,016,945.

In said co-pending application are disclosed and claimed a method and apparatus for pushing continuous crimped filaments into compacting and forming means by motivating air or the like gas applied through a cone-shaped aspirating jet in which there is a straight-line air flow in the direction of movement of the filaments, said jet being positioned at an angle to filter forming means and having a large open end positioned away from said compacting and forming means and a small end adjacent to said compacting and forming means. I have now found that by providing a reverse flow zone or inverted shroud to direct a substantial proportion of the motivating gas from the aforementioned jet in a direction generally opposite to the movement of the filaments, interruptions caused by the blowing out of some of the filaments from under the edges of the tongue of the compacting and forming means can be substantially eliminated. The apparatus and process of this invention is particularly adapted for use in cigarette filter forming methods such as those described in our co-workers' patent Crawford et al. U.S. 2,794,239 and our co-workers' co-pending applications Dyer et al. Serial No. 736,900, filed May 21, 1958, now U.S. Patent No. 3,079,663 and Serial No. 856,793, filed December 2, 1959, now U.S. Patent No. 3,081,951.

This invention has for one object to provide a process of condensing a bundle of continuous filaments by means of a controlled aspirating action of air or the like gas in a manner whereby the filaments are pushed rather than pulled into a compacting mechanism and accordingly guided smoothly and uniformly thereinto. Another object is to provide a method and apparatus for motivating continuous filaments into cigarette filter rod compacting and forming means wherein interruptions in rod forming and wrapping occasioned by filaments being scattered are substantially eliminated. Still another object is to provide a process and apparatus for the production of filter rods of enhanced pressure drop/weight ratio. A further object is to provide a process for making filter rods particularly adapted for the attachment to cigarettes, which process is substantially uninterrupted by scattered filaments preventing sealing of the wrapper around the formed tow. A still further object is to provide a reverse-direction funnel-shaped exit tube affixed to a motivating jet such as that described in my abovementioned co-pending application Serial No. 761,602, now U.S. Patent 3,016,945. The jet as described in said co-pending application in general is truncated in shape, having a large open end positioned toward roll means for feeding filaments continuously thereinto and a small end adjacent and positioned close to compacting and forming means for forming tobacco smoke filter elements. The jet is preferably positioned at about a 15–30° angle to the compacting and forming means and is comprised of an inner member the entrance end of which is more than twice the diameter of the exit of an outer member, said inner member being threaded into the outer member to provide an air chamber between the members, which air chamber exits internally close to the exit of the smaller outer member. The jet by this construction allows for the introduction of motivating air or other gas which pushes the filaments continuously into compacting and forming means. In accordance with the present invention, a more or less annular diverging shroud is positioned around the exit portion of the jet in such a way as to divert the motivating gas sufficiently to prevent blowing out filaments from under the edges of the tongue or upper part of the compacting means and yet sufficient to push the filaments continuously into said compacting and forming means without obstruction thereof. The shroud or reverse-flow tube just described may be used in conjunction with a venturi nozzle positioned at the end of the jet adjacent the forming and compacting means, said venturi diverging in the direction of the compacting and forming means, that is, having a larger diameter at the end adjacent the compacting and forming means. To further dissipate the motivating gas stream which is preferably introduced at a pressure of about 2–15 p.s.i.g., holes may be drilled in the outer or peripheral portion of the tongue compacting means in such a way as to cause some of the gas to be diverted more or less radially. By my inverted funnel-shaped shroud, preferably positioned so that it surrounds a venturi portion of the jet as hereinabove set out, the disruptive effect caused by air blowing out of the end of the jet is substantially eliminated and the filaments are introduced substantially continuously and smoothly into the compacting and forming means.

For a further understanding of my invention reference is made to the attached drawing forming a part of the present application.

In the drawing—

FIG. 1 is a semi-diagrammatic side elevation view of apparatus for filter element manufacture comprising a cigarette filter forming machine having in combination therewith my novel aspirating jet with shroud reverse-flow portion substantially surrounding a venturi nozzle terminating portion of said jet.

FIG. 2 is also a semi-diagrammatic side elevation view somewhat on an enlarged scale for clarity showing the aspirating jet in section and particularly showing the positioning thereof with respect to associated compacting and forming parts.

FIG. 3 is a semi-diagrammatic end view of the shroud looking thereat from the large end thereof.

FIG. 4 is a longitudinal cross-sectional view partially in two planes indicated as A/A in FIG. 3 showing the shroud portion of the jet.

FIG. 5 is a semi-diagrammatic side elevation view of an alternative embodiment of the aspirating jet of my invention showing the reverse-flow shroud surrounding the terminal portion of a conical jet which does not have a venturi nozzle portion.

FIG. 1 will now be described in detail. In this description the figure will be considered from right to left. Namely, it will be assumed that a suitable bundle of crimped continuous filaments has been obtained and is being fed through the apparatus of FIG. 1 for forming a filter element. In other words, the description will be of a path through the apparatus for forming the spread-out continuous filaments into a compacted filter element.

Therefore, **10** designates the crimped continuous filament tow in a spread-out condition to be made into a filter element. This band of filaments will comprise several thousand individual continuous crimped filaments which have previously been treated in certain desired manners. That is, these filaments may be fluffed, opened up by rolls, sprayed with plasticizer and the like. Further details concerning such treatment may be had from

a review of the aforementioned Patent 2,794,239. These filaments 10 pass over and around rolls 12 and 14 for motivating the filaments from the previous treatments such as fluffing, plasticizing, etc. to the treatment by the present invention. These several thousand filaments then arrive at a position designated 16 where the filaments are about to be compacted and formed into a rod-like shape as a filter element.

There is positioned reasonably adjacent position 16 the cone-shaped aspirating jet 18 with shroud 70 of the present invention. Since the construction of this jet is covered in detail in connection with FIGS. 2, 3, 4 and 5 it will merely be mentioned at this point that the jet is provided with a conduit 20 for supplying air or the like fluid pressure thereto and with means for dissipating said air or the like fluid pressure.

This device 18 of the present invention is also positioned in close proximity so as to feed under and into the tongue 22 of the forming member designated overall as 24. This forming member in the present instance for making cigarette filters is generally cylindrical in shape. In other words the forming member is generally of a configuration similar to the configuration of the filter which it is desired to produce. Therefore, since in the present instance it is desired to produce a cylindrical filter element generally conforming to the cylindrical shape of a cigarette, the forming member is, on the upper surfaces thereof, cylindrical and tapered toward the exit end. However, the bottom portion of forming member 24 may be opened to some extent or otherwise constructed to accommodate an endless belt 26. This belt is driven by drum 28. The belt passes over and under various rollers 30, 32 and 34 whereby the belt moves through forming member 24 as a conveyor for conveying and forming filter rods. The aforementioned driving drum and rollers are suitably positioned as shown in the drawing so that the belt passes under forming member 24 in a reasonably parallel manner.

Also positioned in association with forming device 24 and above belt 26 is a substantially endless web of wrapping material 38 such as paper. This wrapping material is fed from supply roll 40 under and over suitable guide rolls 42 and 44. As shown in the drawing the wrapping material is brought into continuous contact with the formed filter element in a manner that the filter element may be enclosed in the wrapping material.

At the other end of the apparatus parts which have just been described there is positioned a paste wheel 46, guide bars 48, sealing means 50 and a cutting device 52. These various parts in the order mentioned serve to apply adhesive to the edges of the wrapping material, to fold over the wrapping material, to seal the wrapped filter element and then cut it into suitable lengths. Since these particular parts and their function may be generally in accordance with the corresponding parts shown in Patent No. 2,794,480, extended description herein appears to be unnecessary.

Attention is now turned to FIG. 2 where the jet 18, the tongue 22 and the forming member 24 are shown in one embodiment thereof on a larger scale. It will be further noted that the wrapping material 38, the endless belt 26 as well as rollers 34 and 44 are also shown in this FIG. 2 on a larger scale. For the sake of simplicity, the filaments shown in FIG. 1 as they enter, pass through and leave the jet and tongue compacting and forming means wrapped as filter elements are not shown in FIG. 2.

Jet 18, preferably of a modified cone-shaped construction, has surrounding the smaller end thereof, a second and smaller cone which has an internal annular channel for diverting the air or motivating gas in a reverse direction from the smaller toward the larger end of said smaller cone. The jet 18 has a considerably greater cross section at the entrance end 54 than at the exit end 56. The jet is made up of the inner member 58 and the outer member 60. These parts are suitably threaded at 62 or otherwise fabricated so that they may be assembled together and provide the chamber 64 which encircles the entire inner member. An opening into this chamber is provided at 66 which corresponds to the point where pipe 20 (of FIG. 1) enters. The inner walls of this chamber are shaped so as to provide an outlet orifice 68 around the periphery of the inner member. In other words, this outlet orifice permits the air or the like motivating gas to escape out through the exit end 56 of the jet, further means of escape being described hereinafter. The terminal portion L of the exit end is in the form of a diverging or venturi nozzle L.

Surrounding the venturi nozzle portion L of the exit end 56 in a more or less annular fashion is funnel-shaped shroud 70. Shroud 70 is bounded by a thin wall 72 and has a web-like member 76 at the large end thereof. This web-like member 76 is bored in such a manner as to be a slip fit on the outer diameter 78 of venturi nozzle portion L of the jet 18, said outer diameter preferably having no taper. A plurality of small holes 80 are spaced circumferentially around the larger bore in the web-member 76. Shroud 70 may be affixed to venturi nozzle portion L by one or more radial set screws 72*a* as indicated in FIGS. 3 and 4. The angle between the axis of the jet and the direction of walls may conveniently be 15 degrees to 20 degrees, and the exit diameter of the shroud may be approximately equal to the exit diameter of the venturi nozzle portion L. The length of the shroud is preferably from 1 to 2 inches, the optimum length being about 1.5 inches. The distance between the end of the venturi nozzle portion L next to the tongue 22 of the compacting and forming means 24 and the smaller diameter end of the shroud is preferably from about 0.1 inch to about 0.6 inch, although this dimension is not critical. The shroud 70 may alternatively be attached to venturi nozzle portion L by welding, mating threads, or other means.

It will be observed that the jet 18 is preferably positioned at a certain angle to tongue 22 of the forming member 24. Also the jet is suitably shaped on the outside thereof so as to permit the ready movement of the web of wrapping material thereunder at point 82 as well as the movement of the endless belt 26. The tongue 22 of the forming means 24 may be provided peripherally with a plurality of small radial holes 84.

The angle of positioning of the jet with respect to the forming member may be described in several ways. That is, the longitudinal axis of the jet is preferably positioned about 15–30 degrees above or below the longitudinal axis of the forming member 24. Or, looking at the interior of the jet the upper wall of the interior of the jet may be about 45 degrees above the horizontal axis of the forming member and the lower wall about 15 degrees above such horizontal axis.

In regard to the size of the jet this will be governed to some extent by the size and number of the crimped filaments being supplied thereto. In the present construction where cigarette filters are being made I have found that a jet of about 2 inches diameter at the entrance end and about 5/8 inch diameter at the discharge end is quite satisfactory. That is, such a jet will handle 10,000–20,000 filaments of a size of 1 to 10 denier per filament. Further information concerning the jet will be apparent from the examples set forth hereinafter showing the handling of filaments of a denier from about 1.5 to 5.

While the air or other gas can be directly introduced into the jet through conduit 66, if desired suitable control valves can be incorporated with the jet to provide the desired control over the volume and/or pressure of the fluid going into the jet. That is, by using variable control in the gas line it is possible to produce filter rods with some variation in weights. Expressed in another way, filter rods with more uniform weights and/or pressure drops can be produced from filaments that may vary somewhat in weight. The control may consist of a means of varying

the air pressure applied to the jet or the orifice opening of the jet. In general, for making filter rods for cigarettes I prefer that the orifice **66** be of a diameter of about 5/8 inch and the air pressure of from about 2 to about 15 p.s.i.g.

In FIGS. 3 and 4 openings **80** are shown in more detail as slots which provide more open area.

In FIG. 5, which represents an alternative embodiment of the jet of this invention, the shroud is attached directly to the cone-shaped part of a jet having no terminal venturi nozzle portion. From an examination of the drawing it is obvious that many of the numbers correspond to those of FIG. 2. The shroud has been adapted for placement over opening **66** by provision of slot **86**. It may be held in position by one or more set screws **88**.

The operation of the above described apparatus is thought apparent to a substantial extent from an inspection of the drawings and consideration of the preceding description. The operation is relatively simple and efficient, but a brief general description will now be set forth.

A band of several thousand continuous crimped filaments **10** pass over and under rolls **12** and **14** until they arrive at position **16** where they are fed into the jet of the present invention. It is relatively easy to feed the filaments to the jet since the gas supplied to the jet causes it to be substantially self-threading. In operation, the jet with shroud attached replaces the condensing horn disclosed by Crawford et al. in U.S. Patent 2,794,480 and designated item **25** in FIGURES 2 and 3 of that patent. Compressed gas (conveniently air) is introduced through inlet **20**. This gas flows through the annular chamber formed by members **58** and **60**, exiting with a high velocity at the downstream end of annular orifice **64**. This high velocity stream of gas aspirates additional air and the previously processed, crimped, opened, continuous filament tow into the jet at the large diameter end **54** thereof. At the smaller diameter end of the shroud, the tow is pushed or thrust forward by the combined moving stream of gas. At the forming means end of the jet **18**, a very considerable proportion of the motivating gas reverses its direction and exits through openings **80** in the large end of the shroud **70**. The volume of air which exits from the small end of the shroud with the tow is insufficient to blow filaments out from under the edge of the tongue **22** of the forming means **24**. Some of the air may be dissipated through radially directed holes **84** in the peripheral portion of the tongue **22**, if desired. After being pushed into the forming means **24**, the filaments are compacted and formed into a cylindrical-shaped filter element. It is not essential that the small end of the shroud or any part of the jet project under the entrance end of the tongue for the filaments to be motivated under the tongue of the forming means and the motivating gas to be dissipated in accordance with my invention. While the filaments are being pushed under the tongue **22** of the forming means **24**, the wrapping material **38** is being continuously supplied and the endless belt **26** conveys the wrapped filter rod out of forming member **24** to subsequent steps accomplished by parts **46**, **48**, **50** and **52** of sealing the wrapping material around the rod and cutting the rod into suitable lengths.

A still further understanding of my invention will be had from a consideration of the following examples which are set forth for illustrating certain preferred embodiments of the instant invention.

EXAMPLE I

Filter rods were prepared using the motivating jet of the present invention, viz. the embodiment depicted in FIG. 2, and compared with filter rods made in accordance with other condensing means, viz. (1) a trumpet such as that used in the process and apparatus of U.S. 2,794,480 of my co-workers, Crawford and Stevens, (2) the jet described in my co-pending application U.S. Serial No. 761,602 now U.S. Patent No. 3,016,945, and (3) a jet such as that of my co-pending application U.S. Serial No. 761,602 now U.S. Patent No. 3,016,945 modified only with a venturi portion at the end thereof nearest the compacting and forming means. The filter rods prepared were 24.7 mm. in circumference and 60 mm. in length and were made from 2.1 denier per filament (D./F.) cellulose acetate tow. The following table illustrates the high pressure drops in inches of water and the higher pressure drop per gram of tow for the filters prepared in accordance with the present invention.

Table

Condensing Means	Total Denier	Pressure Drop, Inches of Water	Rod Weight, Grams	Pressure Drop Per Gram of Tow
Crawford and Stevens	48,000	9.8	0.471	20.8
Trumpet of U.S. Patent 2,794,480	54,000	11.9	0.5635	21.2
Air Horn disclosed in Wexler, Ser. No. 761,602, now U.S. Patent 3,016,945	48,000	11.9	0.4975	23.9
Air Horn modified with venturi nozzle terminal portion	48,000	12.3	0.505	24.3
Shrouded Jet of this invention	48,000	12.9	0.512	25.2

EXAMPLE II

A 1.6 D./F., 37,000 total denier tow was processed through condensing means such as that of Crawford and Stevens U.S. Patent 2,794,480 condensing trumpet, producing a 24.8 x 90 mm. rod which weighed 0.501 gm. and had a pressure drop of 8.6 inches of water. Using the device of FIG. 2 and the same specification tow, a rod was produced of the same size which weighed 0.794 gm. and had a pressure drop of 24.6 inches of water.

EXAMPLE III

Using a jet with shroud a 24.8 x 90 mm. rod was made from 5 D./F., 70,000 total denier tow with a weight of 1.071 gms. and a pressure drop of 16.6 inches. With a prior art condensing horn such as that used in Crawford and Stevens U.S. Patent 2,794,480, this same tow provided a rod with a weight of 0.800 gm. and a pressure drop of 7.1 inches. Although the jet with the shroud of the present invention provided a pressure drop 2.3 times the value obtainable with a simple funnel, filaments did not blow out from under the edges of the tongue. Without the shroud, sealing difficulties were encountered before the pressure drop could be raised to this degree.

Any pressure drop from 8.6 inches to 24.6 inches may be obtained by varying the air pressure to the jet and the quantity of tow supplied to the jet, using the process and apparatus of this invention.

From the foregoing description it can readily be seen that I have provided a method and apparatus for motivating continuous filaments into compacting and forming means whereby the disruptive effect caused by scattering of the filaments at the entrance to said forming and compacting means is substantially eliminated and filter rods of a significantly higher pressure drop are produced.

Although the invention has been described in considerable detail with particular reference to certain preferred embodiments thereof, variations and modifications can be effected within the spirit and scope of the invention as described hereinabove, and as defined in the appended claims.

I claim:

1. A method of making a filter element from spread out crimped continuous filaments which comprises passing a band of several thousand of said spread out filaments into a cone shaped jet positioned in close proximity to and at an angle to compacting and forming means, supplying a gas to the jet whereby the spread out filaments are motivated into and through the jet and thereby upon exiting from the jet are pushed into the aforesaid closely positioned compacting and forming means thereby being formed into the filter element, dissipating gas by passing in a reverse flow in a diverging path thereby

minimizing interruption in forming the filter element because of scattering of filaments, also supplying a filter element wrapping web to the forming means whereby the filter formed as aforesaid is wrapped, sealing the wrapped web around the filter element and cutting the filter element to length.

2. The method in accordance with claim 1 wherein the filaments are comprised of several thousand cellulose acetate filaments of a denier between 1–16.

3. The method in accordance with claim 1 wherein the gas is further dissipated peripherally through a plurality of small radial holes in the compacting and forming means.

4. A jet apparatus for the manufacture of tobacco smoke filter elements out of continuous crimped filaments which comprises a large open end and an opposite small end of the jet, said small end of the jet being provided internally with means for the injection of a gas within the jet whereby filaments may be motivated through the jet prior to being formed into a filter, an inverted funnel shroud affixed to said small end of the jet whereby the gas injected into the jet by the means for the injection of a gas is dissipated in a reverse-flow divergent path, and an endless belt device in association with the apparatus for feeding wrapping material around the filter.

5. The apparatus of claim 4 wherin the inverted funnel-shaped shroud is comprised of a thin-wall funnel having a web-like member at the large end thereof, said web-like member being bored to a slip fit upon the outer wall of the small end of the jet.

6. The apparatus of claim 4 wherein the jet in the large end is about 2 inches in diameter and in the small end is about 5/8 inch in diameter.

7. The apparatus of claim 4 further comprising means for forming the filaments into a filter, the small end of the jet leading into said means for forming the filaments into a filter, said means having peripherally arranged holes therein for ejecting gas therethrough.

References Cited by the Examiner

UNITED STATES PATENTS

1,941,726	1/34	Vawter	302—63 X
2,503,743	4/50	Keefer	302—63 X
2,794,239	6/57	Crawford et al.	28—81
2,794,480	6/57	Crawford et al.	28—81
2,796,810	6/57	Muller	19—150 X
2,900,988	8/59	Crawford et al.	28—81
2,966,198	12/60	Wylde	19—66 X
3,016,945	1/62	Wexler	28—81
3,050,430	8/62	Gallagher	57—34

FOREIGN PATENTS

291,706	6/28	Great Britain.

DONALD W. PARKER, *Primary Examiner.*

RUSSELL C. MADER, *Examiner.*