United States Patent [19]

Tuttle

[11] **Des. 250,085**

[45] ** **Oct. 31, 1978**

[54] **BLOOD FLOW CONTROLLER AND THE LIKE**

[75] Inventor: **Glenn L. Tuttle**, Bountiful, Utah

[73] Assignee: **Sandoz, Inc.**, E. Hanover, N.J.

[**] Term: **14 Years**

[21] Appl. No.: **725,654**

[22] Filed: **Sep. 22, 1976**

[51] **Int. Cl.** ..... **D8—02**; D24—02

[52] **U.S. Cl.** ..... **D8/72**; 128/214 R; D24/52; D24/99

[58] **Field of Search** ..... D8/72; 128/214 R; 251/4, 6, 7; D24/52, 27, 99; 24/132 WL, 115 L, 132 R

[56] **References Cited**

U.S. PATENT DOCUMENTS

D. 212,987	12/1968	Cramer	D24/52
D. 213,849	4/1969	Sato	D8/72
3,685,787	8/1972	Adelberg	251/6
3,831,625	8/1974	Roediger	251/6 X
3,960,149	6/1976	Bujan	128/214 R

Primary Examiner—Bernard Ansher

Attorney, Agent, or Firm—Gerald D. Sharkin

[57] **CLAIM**

The ornamental design for a blood flow controller and the like, as shown and described.

DESCRIPTION

FIG. **1** is a top plan view of a blood flow controller or the like showing my new design;

FIG. **2** is an end elevation as seen from the left of FIG. **1**;

FIG. **3** is an end elevation as seen from the right of FIG. **1**; and

FIG. **4** is an isometric view thereof.

The broken lines are shown for illustrative purposes only.

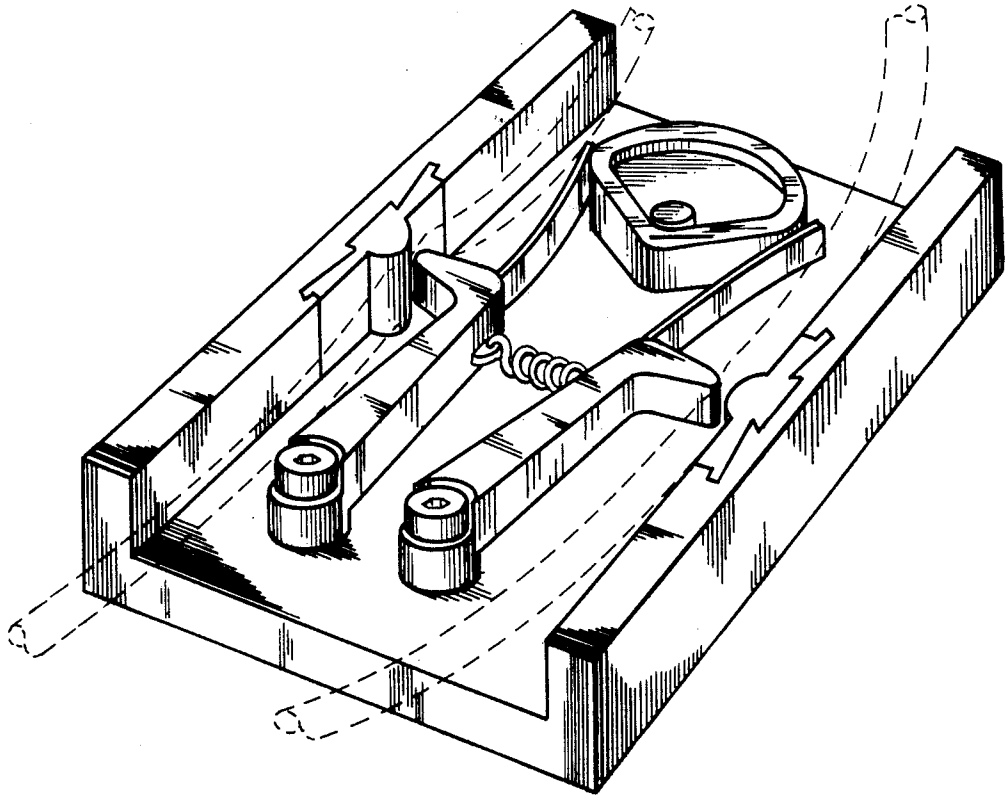

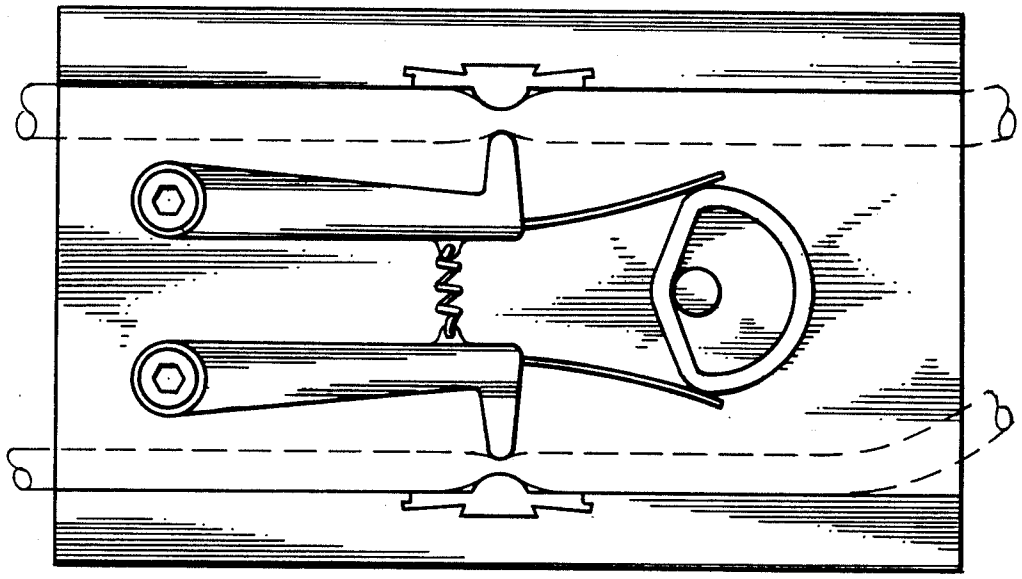

FIG. 1

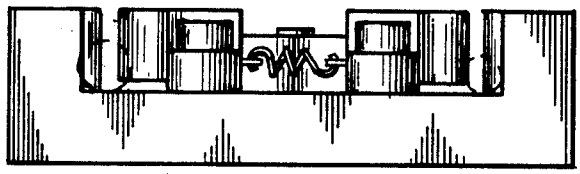

FIG. 2

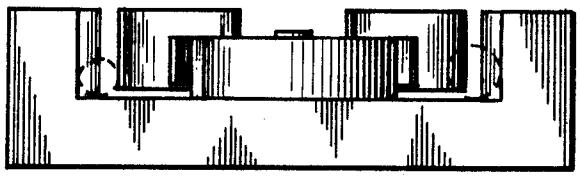

FIG. 3

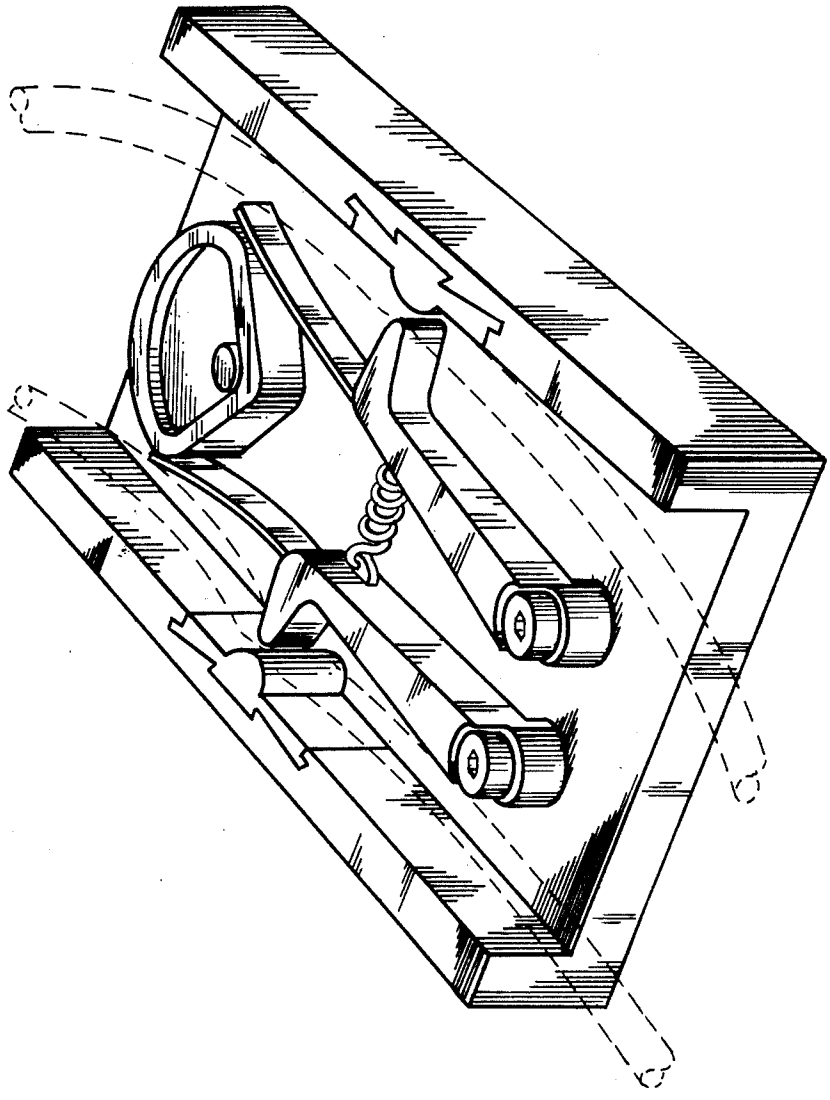

FIG. 4