Jan. 2, 1940. F. LAMBACH 2,185,963

TENSION-REGULATING DEVICE FOR THE DRAW-OFF MECHANISM OF FULL-FASHIONED KNITTING MACHINES

Filed Sept. 20, 1938 6 Sheets-Sheet 1

Fig. 1.

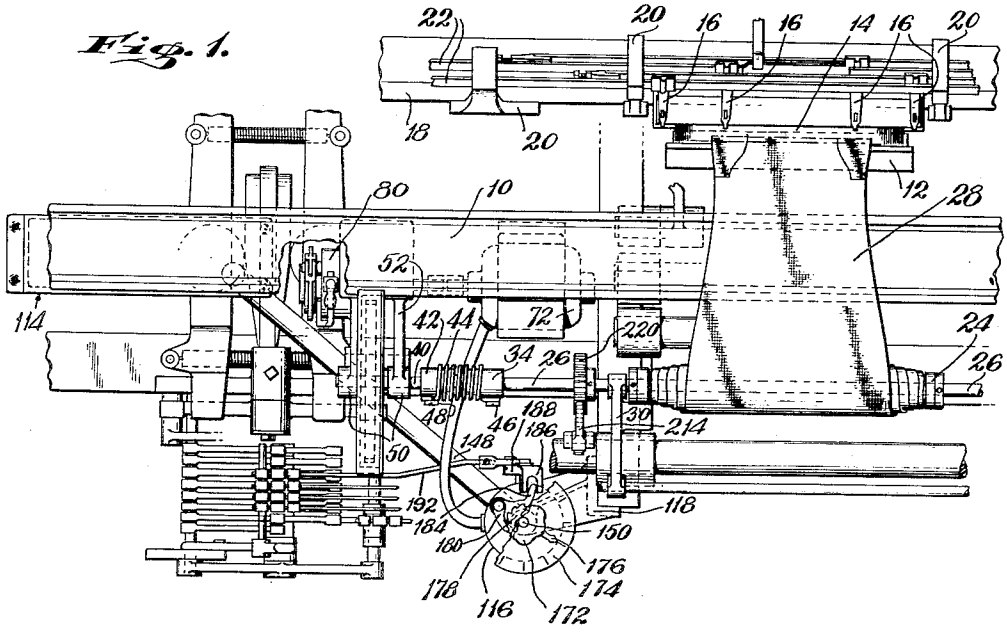

Fig. 2.

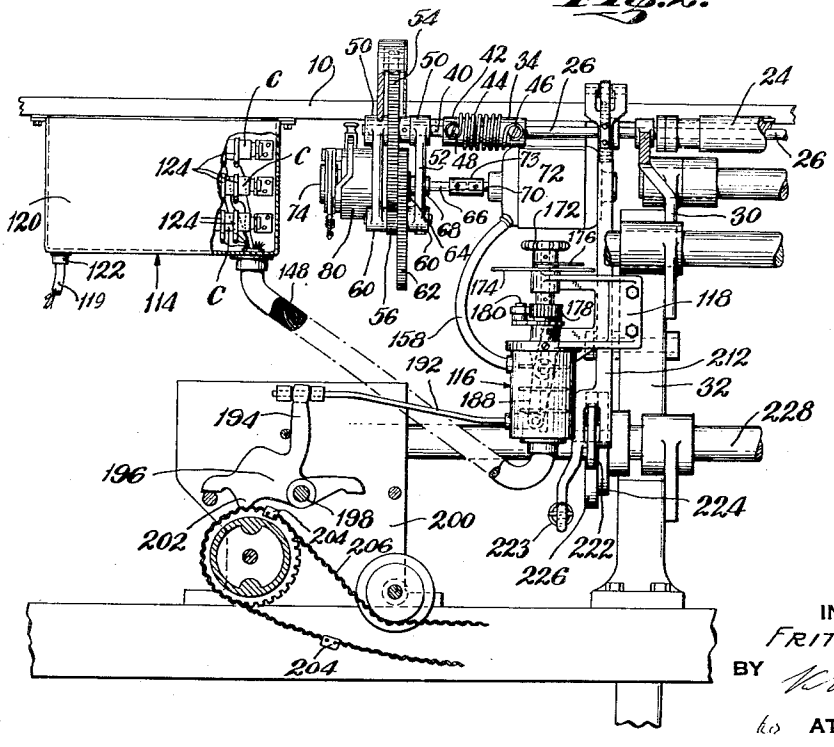

INVENTOR
FRITZ LAMBACH
BY R. W. Faist
to ATTORNEY

Jan. 2, 1940. F. LAMBACH 2,185,963

TENSION-REGULATING DEVICE FOR THE DRAW-OFF MECHANISM OF FULL-FASHIONED KNITTING MACHINES

Filed Sept. 20, 1938 6 Sheets-Sheet 2

Fig. 3.

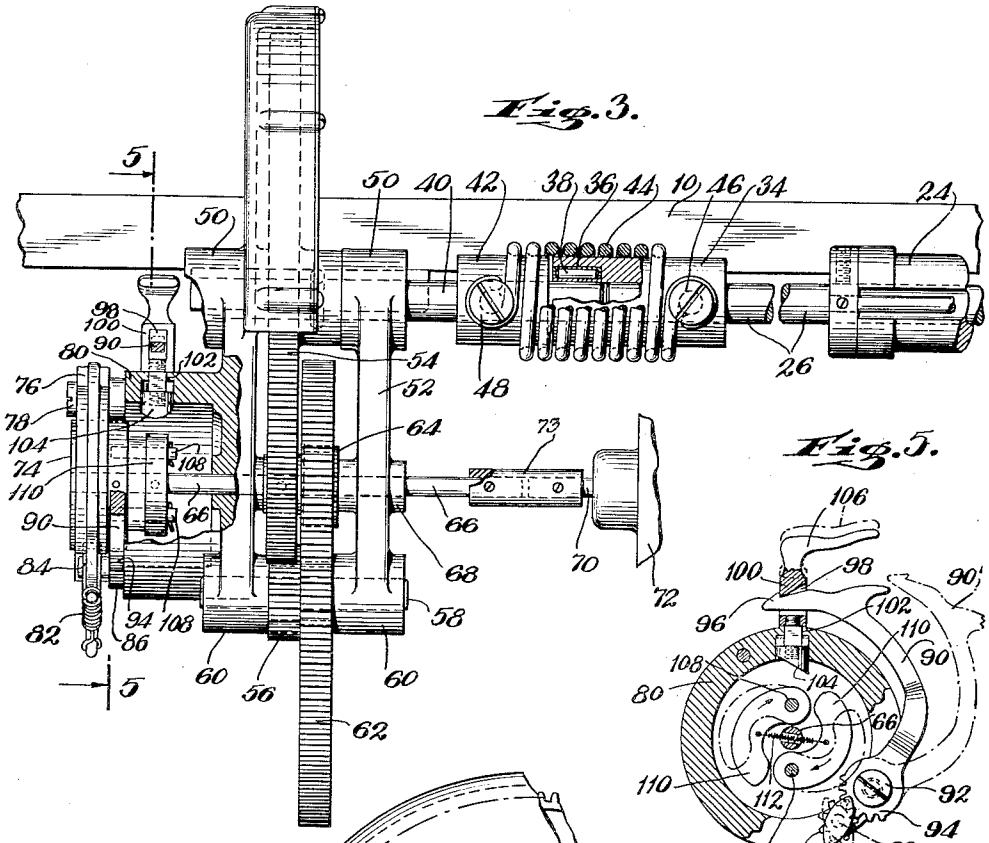

Fig. 5.

Fig. 4.

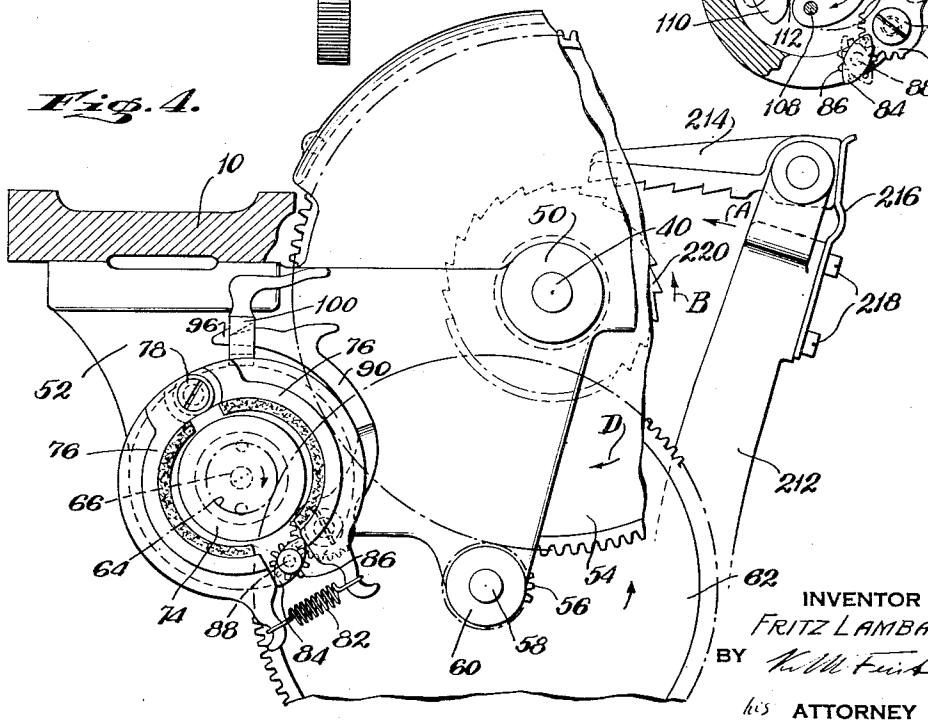

INVENTOR
FRITZ LAMBACH
BY
his ATTORNEY

Jan. 2, 1940. F. LAMBACH 2,185,963

TENSION-REGULATING DEVICE FOR THE DRAW-OFF MECHANISM OF FULL-FASHIONED KNITTING MACHINES

Filed Sept. 20, 1938 6 Sheets-Sheet 3

Fig. 7.

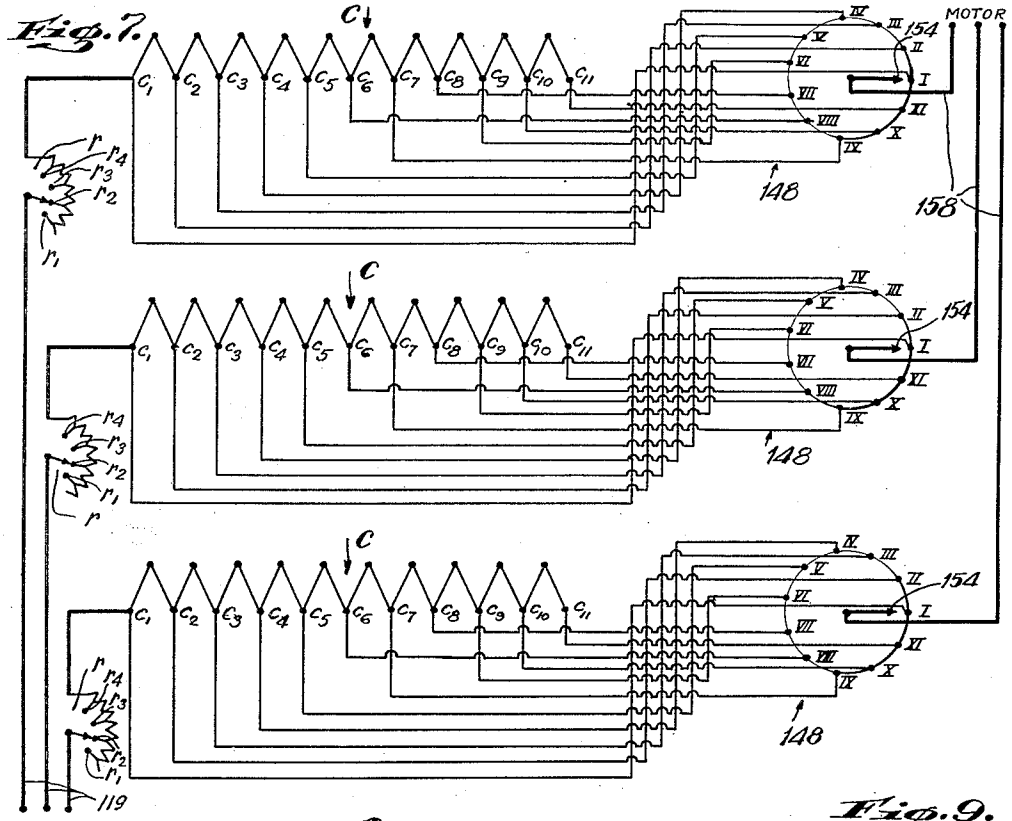

Fig. 9.

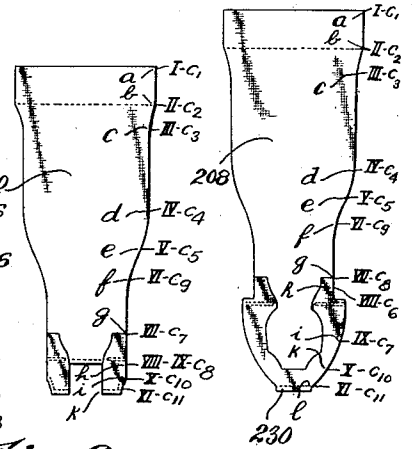

Fig. 8.

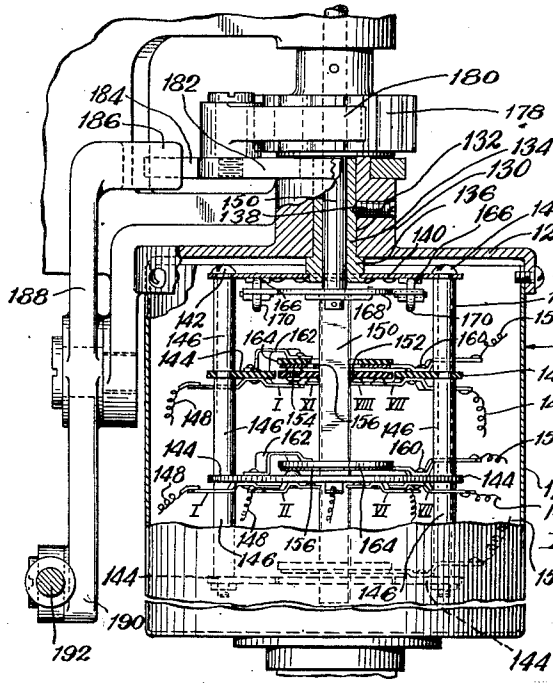

Fig. 6.

INVENTOR
FRITZ LAMBACH
BY
his ATTORNEY

Jan. 2, 1940. F. LAMBACH 2,185,963

TENSION-REGULATING DEVICE FOR THE DRAW-OFF MECHANISM OF FULL-FASHIONED KNITTING MACHINES

Filed Sept. 20, 1938 6 Sheets-Sheet 4

Fig. 10.

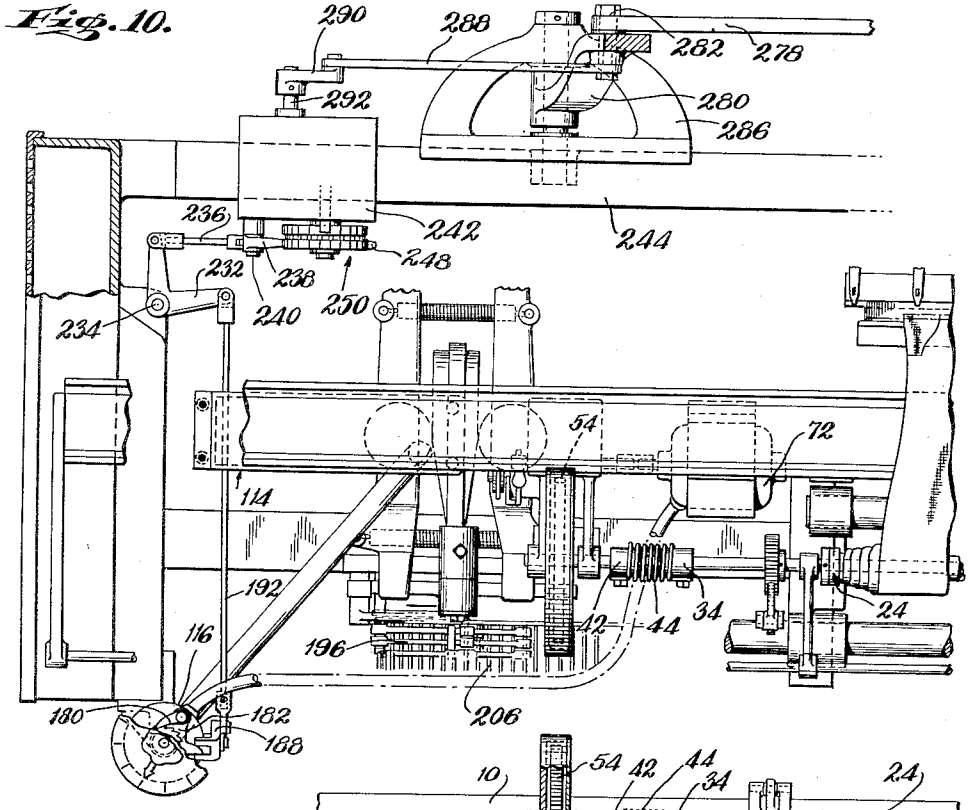

Fig. 11.

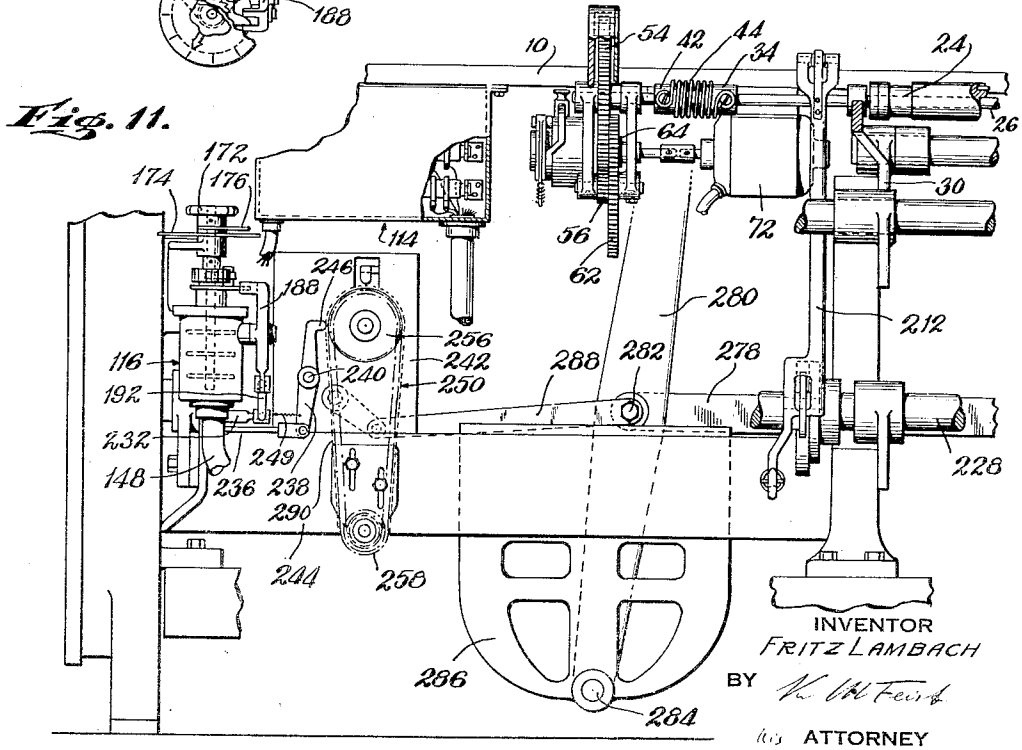

INVENTOR
FRITZ LAMBACH
BY
his ATTORNEY

Jan. 2, 1940. F. LAMBACH 2,185,963

TENSION-REGULATING DEVICE FOR THE DRAW-OFF MECHANISM OF FULL-FASHIONED KNITTING MACHINES

Filed Sept. 20, 1938 6 Sheets-Sheet 5

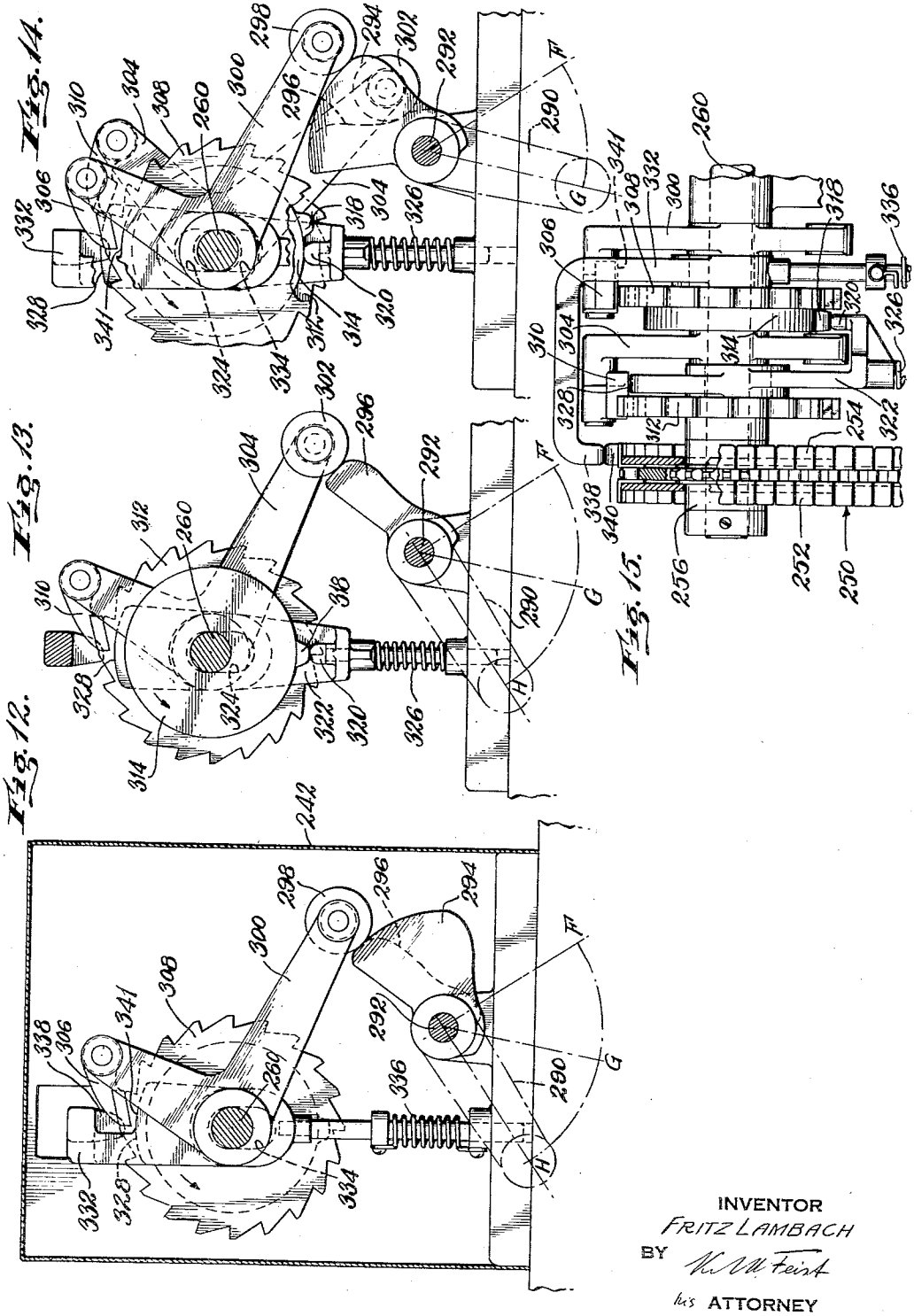

INVENTOR
FRITZ LAMBACH
BY
his ATTORNEY

Jan. 2, 1940. F. LAMBACH 2,185,963

TENSION-REGULATING DEVICE FOR THE DRAW-OFF MECHANISM OF FULL-FASHIONED KNITTING MACHINES

Filed Sept. 20, 1938 6 Sheets-Sheet 6

Fig. 17.

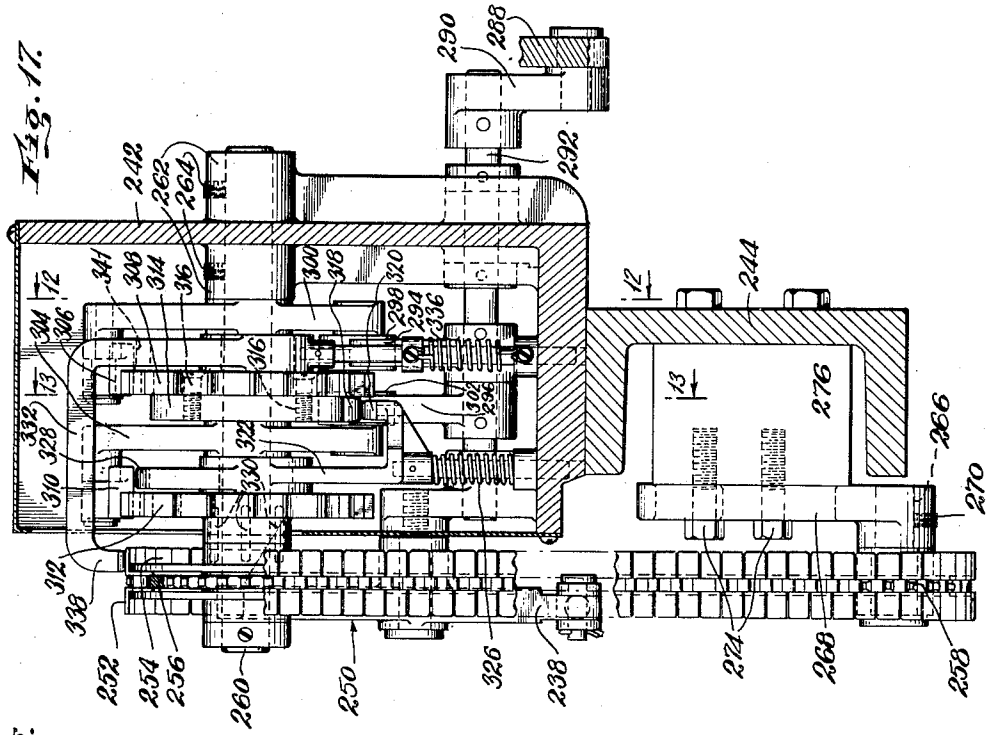

Fig. 16.

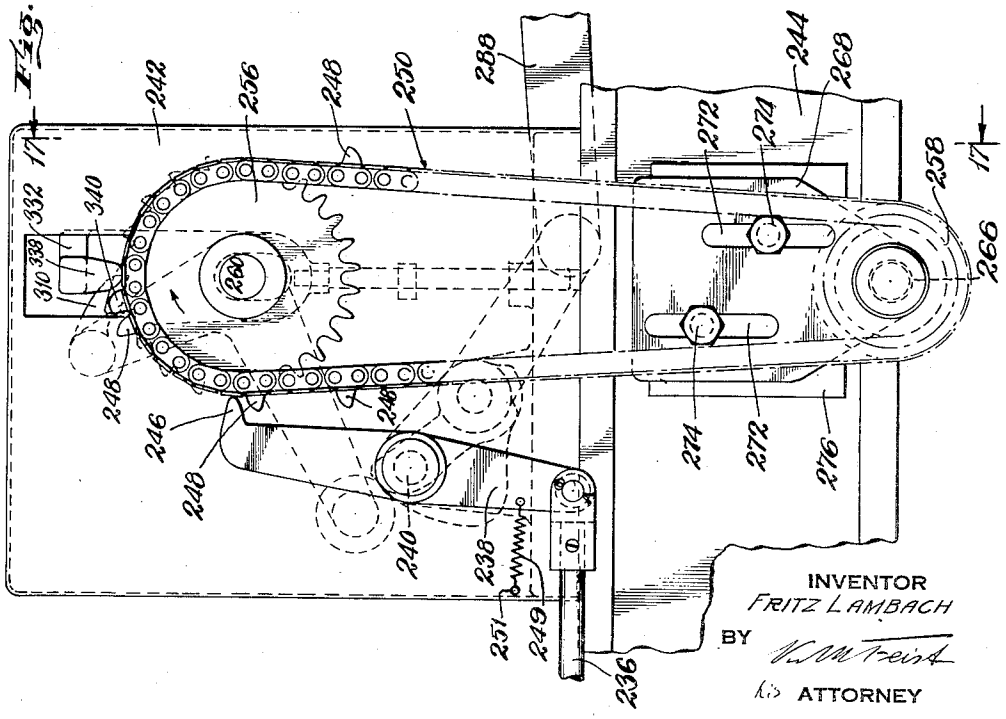

INVENTOR
FRITZ LAMBACH
BY
His ATTORNEY

Patented Jan. 2, 1940 2,185,963

UNITED STATES PATENT OFFICE

2,185,963

TENSION-REGULATING DEVICE FOR THE DRAW-OFF MECHANISM OF FULL-FASHIONED KNITTING MACHINES

Fritz Lambach, Fairview, N. J., assignor to Robert Reiner, Inc., Weehawken, N. J.

Application September 20, 1938, Serial No. 230,845

20 Claims. (Cl. 66—149)

My invention relates to full-fashioned knitting machines, and more particularly to a tension-regulating device for the draw-off mechanism of such machines.

During the knitting of full-fashioned fabrics, such as stocking blanks, the tension applied to the draw-off reel or take-up reel must be varied, in order to obtain a fabric with loops of uniform size. The hitherto known draw-off mechanisms of knitting machines are equipped with mechanical means, such as a plurality of weights or springs, which apply the tension to the take-up reels. Said weights or springs are successively and automatically removed or disconnected from the take-up reel during the knitting of a stocking blank. Thus, the tension applied to the take-up reel is continuously decreased during the knitting operation, and after the completion of a cycle of the knitting machine producing a complete stocking blank, the parts of the tension-regulating device must be reset by hand to their starting position, before a new cycle of the knitting machine may be carried out. Moreover, stockings knitted of different yarns, for example two-thread-silk-yarn, three-thread-silk-yarn etc., require different degrees of tension to be applied to the take-up reel. A certain weight or a certain spring produces, however, only a certain degree of tension, so that the whole set of weights or springs of the hitherto known tension-regulating devices equipped with weights or springs must be readjusted, if stockings of the same type but of different qualities of yarns shall be knitted.

One object of my invention is to provide a tension-regulating device, by means of which the tension applied to the take-up reel may be automatically decreased or increased during the knitting of a stocking blank, so that the proper tension may be applied to the take-up reel at any time. For example, if during the knitting of a stocking blank the width thereof is increased or if a portion of the stocking blank is knitted with a reinforcing yarn requiring a higher tension than the previously knitted portion of the stocking blank, the tension may be properly increased.

Another object of my invention is to provide a tension-regulating device, the parts of which are automatically returned into their starting position after the completion of every cycle of the knitting machine.

A further object of my invention is to provide a tension-regulating device, which may be easily adjusted to the knitting of any type of stocking blanks and to any type of yarn used for the knitting of such stocking blanks.

Still another object of my invention is to provide a tension-regulating device, which is automatically rendered inactive, if the fabric is pressed-off.

A further object of my invention is to provide a tension-regulating device, which may be easily attached to any standard knitting machine without a considerable alteration thereof.

Still a further object of my invention is to provide a tension-regulating device, which may be controlled by the main shaft of the knitting machine without utilization of any row of the usual chain mechanism.

In order to carry out my invention into practice, I provide electrical means adapted to be connected to the take-up reel of any type of knitting machines for applying tension to said take-up reel, and an electrical control mechanism associated with said electrical means for causing same to apply different degrees of tension to said take-up reel during the operation of the knitting machine. Preferably, I use a so-called "torque motor" as electrical means, i. e. a motor with high starting torque, which may be loaded to such a degree that a stoppage occurs without an undue heating of the parts of the motor. The electrical control mechanism may comprise a rheostat with adjustable sliding members on its coils and a distributor switch having its terminals connected to said sliding members in such a manner, that during the feed motion of the distributor switch increasing or decreasing resistances are inserted as may be required by the torque motor for the tension to be applied to the take-up reel. The distributor switch performs one revolution during a cycle of the knitting machine, so that after the completion of the stocking blank the tension-regulating device is automatically reset into its starting position. The arrangement of a brake mechanism, which automatically stops the torque motor, if the motor starts to exceed a predetermined speed, prevents any damage due to a press-off of the fabric. In a preferred embodiment, I arrange a separate control device operatively connected to the main shaft and a separate small chain mechanism, which controls the electrical control mechanism of the tension-regulating device, so that the latter may be attached to a standard knitting machine without an alteration of the usual chain mechanism thereof.

The above mentioned objects and advantages as well as other objects and advantages will be more fully disclosed in the following specification reference being had to the accompanying drawings forming a part of this specification, in which:

Fig. 1 is a top plan view of a section of a knitting machine equipped with an embodiment of my tension-regulating device,

Fig. 2 is a front elevational view of the section of the knitting machine illustrated in Fig. 1,

Fig. 3 is a front elevational view similar to Fig. 2 illustrating a portion of the tension-regulating device and the take-up reel in an enlarged scale, partly in section,

Fig. 4 is a side elevational view of the device shown in Fig. 3,

Fig. 5 is a sectional view of the brake mechanism taken on line 5—5 as shown in Fig. 3,

Fig. 6 is a side elevational view of the distributor switch, in an enlarged scale, partly in section,

Fig. 7 is a diagram of the wiring system of the electrical control means,

Fig. 8 illustrates a stocking blank knitted on a legger,

Fig. 9 illustrates a combination full-fashioned stocking blank with leg and foot portion knitted on a single-unit machine,

Fig. 10 is a top plan view of a section of a knitting machine equipped with a different embodiment of my tension-regulating device,

Fig. 11 is a front elevational view of the section of the knitting machine illustrated in Fig. 10,

Fig. 12 is a sectional view of the control device shown in Fig. 17, taken on line 12—12,

Fig. 13 is a sectional view of the control device shown in Fig. 17, taken on line 13—13,

Fig. 14 is a sectional view of the control device similar to Fig. 12, the parts, however, being shown in a different position,

Fig. 15 is an elevational view of the upper portion of the control device shown in Fig. 17, the parts, however, being in a position differing from the position shown in said Fig. 17,

Fig. 16 is a front elevational view of the separate chain mechanism and control device of the embodiment of the tension-regulating device according to Figs. 10 and 11, in an enlarged scale, and

Fig. 17 is a sectional view taken on line 17—17 as shown in Fig. 16.

Referring now to Figs. 1–7, 10 indicates the usual table of the knitting machine, 12 indicates the needle bar cooperating with the sinkers 14, 16 are the yarn carriers feeding the yarn to the sinkers, and 18 is a rail provided with brackets 20 guiding the rods 22, which carry the yarn carriers 16. The above mentioned parts are arranged and operated in the usual manner and do not need to be described in detail.

The fabric roller or take-up reel 24, which draws off the knitted stocking blank 28 from the needles of the needle bar 12, is mounted on a shaft 26 and is fixed thereto in any suitable manner. Said shaft is rotatably mounted in brackets 30 supported by the frame 32 of the knitting machine.

The free end of the shaft 26 carries a coupling element 34 of substantially cylindrical shape. One end of said element 34 is secured to the shaft 26, the other end thereof is provided with a recess 36 (see Fig. 3) adapted to receive a roller bearing 38 mounted on the free end of a shaft 40 said shaft being in alignment with the shaft 26. The other coupling element 42 having the form of a collar is secured to the shaft 40 near the end thereof. The elements 34 and 42 are connected with each other by means of a spiral spring 44, the respective ends thereof being secured to the elements 34 and 42 respectively by means of screws 46 and 48. The roller bearing 38 holds the shafts 26 and 40 in alignment with each other. Furthermore, the arrangement of the spring 44 and the roller bearing 38 permits relative movements of the elements 34 and 42 with respect to each other, so that the take-up reel 24 secured to the shaft 26 may perform slight oscillating movements on account of the needle movements, although the shaft 40 is subjected to a torque acting in one direction only, as will be described later on.

The shaft 40 is journalled in bearings 50 of a bracket 52 fixed to the table 10. A gear 54 is keyed to the shaft 40 and meshes with a pinion 56 keyed to a shaft 58 journalled in bearings 60 of the bracket 52. A gear 62 also keyed to the shaft 58 meshes with a pinion 64 keyed to a shaft 66 journalled in bearings 68 of the bracket 52. The right hand end of said shaft 66 as seen in Figs. 2 and 3 is connected to the shaft 70 of the torque motor 72 by means of a coupling 73, so that the torque of the torque motor is transferred to the take-up reel 24 through the medium of the reduction gear 64, 62, 56, 54 and the flexible coupling 34, 42, 44 and tension is applied to the take-up reel 24 by the motor 72.

The left hand portion of the shaft 66 as seen in Figs. 2 and 3 is connected to the brake mechanism, by means of which the torque motor may be arrested either by hand or by an automatic device. A brake disc 74 is secured to the free end of the shaft 66. Two brake shoes 76 cooperate with said disc 74. One end of each brake shoe 76 is swingably arranged on a screw stud 78 threaded into the wall of the housing 80 forming a part of the bracket 52. The free ends of said brake shoes 76 are connected with each other by a tension spring 82, which tends to press the brake shoes against the disc. A spreader 84 and a pinion 86 are fixed to a stud 88 rotatably mounted in the wall of the housing 80. Said spreader 84 contacts with said brake shoes and disengages same from the disc 74 in the position shown in full lines in Figs. 4 and 5. One end of a curved lever 90 is hinged to the housing 80 by means of a screw stud 92 threaded into the wall thereof. Said end of the lever 90 carries a gear segment 94 meshing with said pinion 86. The lever 90 is bent in such a manner, that its upper end is outside of the plane of its lower end. The upper end of the lever 90 is provided with a hook 96 and may be passed through a slot 98 of a locking member 100 slidably arranged in a radial opening 102 of the housing 80. If the locking member 100 is in the position shown in full lines in Figs. 4 and 5, in which its inner bevel end 104 projects into the housing 80, and if the hook 96 is engaged with the body of the locking member, the lever 90 holds the spreader 84 in the position shown in full lines, and the brake mechanism is rendered inactive, so that the torque motor may apply tension to the take-up reel. If, for any reason, the torque motor shall be arrested to release the take-up reel from tension, the locking member 100 is lifted, so that the hook 96 is disengaged from the body of the locking member and may pass through the slot 98. As soon as the locking member 100 is sufficiently lifted to release the hook 96, the tension spring 82 (see Fig. 4) turns the spreader 84, presses the brake shoes 76 against the disc 74 and swings the lever 90 into the position 90' through the medium of the spreader 84, pinion 86 and gear segment 94.

Thus, the brake mechanism is rendered active and the torque motor is stopped.

The lifting of the locking member 100 may be carried out by hand by means of the hand lever 106 arranged at the outer end of the locking member. In order to obtain an automatic lifting of the locking member 100, if due to a press-off of the fabric the torque motor starts to run at an excessive speed, the following mechanism is provided. Two pins 108 are secured to the disc 74 and rotate therewith. Each of said pins 108 carries a centrifugal weight 110 swingably arranged thereon. The ends of a tension spring 112 passing through a hole of the shaft 66 are connected to the centrifugal weights, and said spring 112 tends to hold the centrifugal weights in close relationship. As soon as a predetermined speed of the shaft 66 is reached, the centrifugal force overcomes the action of the spring 112 and the weights swing into the position shown in dash and dotted lines and abut against the inwardly projecting end 104 of the locking member, so that the latter is lifted and the lever 90 is released, whereby the brake mechanism is rendered active.

As described above, the torque motor 72 applies the necessary tension to the take-up reel 24. During the knitting of full-fashioned stocking blanks, however, the width of the fabric is varied and portions of the fabric are knitted with reinforcing yarn, so that the tension to be applied to the take-up reel must be decreased and increased depending on these features. In other words, the torque of the motor 72 must be varied from higher degree to lower degree and from lower degree to higher degree during the operation of the knitting machine. For this purpose a rheostat 114 mounted on the table 10 and a distributor switch 116 mounted on a bracket 118 secured to the frame 32 are arranged in the power line leading to the motor from an electrical source (not shown). The drawings illustrate a three-phase-system, but any other suitable system can be used, if desired.

As shown in Fig. 2, the three lines 119 of the three-phase-system enter the casing 120 of the rheostat 114 through the opening 122, and each line is connected to one of the three coils C arranged in the casing 120. Each coil C is provided with a plurality of sliding members 124, which may be adjusted to predetermined positions on the coils C, for example, they may be arranged in the positions $c_1, c_2, c_3 \ldots c_{11}$ (see Fig. 7). Said sliding members 124 are connected to the terminals of the distributor switch in a manner to be described later on.

The upper part of the housing 126 of the distributor switch is closed by a cover 128 provided with a neck portion 130. Said neck portion has a bore 132. A bushing 134 is inserted in this bore 132 and abuts with its shoulder 136 against the inner surface of the cover 128. A set screw 138 holds the bushing 134 in its position. A plate 140 is rigidly secured to the bushing 134. Screws 142 are passed through holes of said plate 140 and support three rings 144 of insulating material. Said rings 144 are spaced from each other by tubes 146 arranged on the screws 142. Each of said stationary rings of insulating material carries a plurality of terminals I, II, III . . . XI (see Figs. 6 and 7), which are connected to the sliding members of the rheostat by wires 148. The rotatable part of the distributor switch 116 comprises a shaft 150 journalled in the boring of the bushing 134. Said shaft carries three discs 152 of insulating material positioned within said stationary rings 144. Each disc 152 is provided with a contact point 154. The upper surface of said contact point 154 is in constant engagement with a ring 156 of conducting material. Said ring is connected to the torque motor 72 by the conduit 158 and is secured to the stationary insulating ring 144 at 160. Furthermore, a bracket 162 secured to the insulating ring 144 is provided, said bracket holding the contact ring 156 in its position through the medium of an insulating ring 164. The lower surface of the contact point 154 may be brought into contact with any one of the terminals I, II . . . XI, if the shaft 150 is rotated, so that said contact point selects the terminal to be connected with the torque motor. In order to secure the proper position of the contact point 154 with respect to any one of the terminals I, II . . . XI, the stationary plate 140 is provided with a plurality of indentations 166, and a plate 168 of resilient material provided with rollers 170 is secured to the shaft 150. If the shaft 150 is rotated, the rollers run along the surface of the plate 140, and if the contact point 154 comes in engagement with a terminal, the resilient plate 168 urges the rollers 170 into some of the indentations 166, so that the contact point is held in its position.

The rotation of the shaft 150 may be carried out by hand. For this purpose, the upper end of the shaft 150 is provided with a knob 172 (Fig. 2). Furthermore, a stationary dial 174 and a finger 176 secured to the shaft 150 are arranged, so that the operator may easily recognize the position of the distributor switch. Preferably, however, the rotation of the shaft 150 of the distributor switch 116 is carried out automatically. For this purpose, I arrange the following mechanism: A ratchet wheel 178 is secured to the shaft 150. A pawl 180 cooperating with said ratchet wheel is hinged to one end of the bell-crank-lever 182 swingably mounted on the neck portion 130 of the cover 128. The other end 184 of said bell-crank-lever 182 is in engagement with a forked end portion 186 of a lever 188 swingably mounted on the cover 128 of the distributor switch 116. The lower end 190 of said lever 188 is linked to one end of a rod 192. The other end of said rod 192 is connected to one end 194 of a bell-crank-lever 196 swingably mounted on the shaft 198 supported by the plate 200 mounted on the frame of the knitting machine. A projection 202 of the bell-crank-lever 196 cooperates with buttons 204 arranged on one of the rows of the usual chain mechanism 206, which is controlled by the main shaft of the knitting machine in usual manner and in turn controls the knitting mechanism. As soon as a button 204 of the rotating chain 206 engages with the projection 202, the bell-crank-lever 196 is swung about the shaft 198, and the shaft 150 of the distributor switch is rotated through the medium of the rod 192, lever 188, pawl 180 and ratchet wheel 178, so that the contact point 154 contacts the next terminal. It will be easily understood, that the buttons 204 may be arranged on the chain 206 in such a manner, that after the completion of a cycle of the knitting machine, during which a stocking blank has been knitted, the contact point 154 of the distributor switch is returned to its starting position, so that the tension-regulating device is ready for the next cycle of the knitting machine.

My tension-regulating device may be easily adjusted to any type of stocking blank to be knitted on the machine, as will be understood from the following explanation. For example, supposing

a combination full-fashioned stocking blank **208** as shown in Fig. 9 is to be knitted. During the knitting of the welt between the points *a* and *b* the highest tension must be applied to the take-up reel. If the first loop course of the welt is engaged with the take-up hooks connected to the take-up reel the contact point **154** of the distributor switch is in a position contacting the terminal I. Therefore, this terminal I is connected to a sliding member of the rheostat, which is positioned at the point c_1, so that the smallest resistance is inserted in the line leading to the motor. If the welt is completed and the knitting mechanism controlled by the chain mechanism starts the knitting of the leg at the point *b*, the contact point is automatically brought in contact with the terminal II by means of a button **204** on one of the rows of the chain mechanism **206**. The terminal II is connected to a sliding member positioned at the point c_2, so that a different resistance is inserted in the line, which causes a decrease of the tension applied to the take-up reel by the torque motor, as is necessary at the beginning of the knitting of the leg. At the points *c*, *d*, *e* the width of the stocking blank is reduced, so that at each of these points the tension applied to the take-up reel must be decreased. If the points *c*, *d*, and *e* respectively are reached, the contact point **154** is brought in contact with the terminals III, IV and V respectively, which are connected to the points c_3, c_4 and c_5 respectively of the rheostat thus decreasing the tension applied to the take-up reel. At the point *f* the tension shall be further decreased, but at the point *g* the knitting of the high heels is started, which are knitted with additional reinforcing yarn, so that at the point *g* the tension must be increased, although the width of the stocking blank remains unchanged. At the point *h* the width of the stocking blank is increased, so that the tension must be again increased. At the point *i* the width of the stocking blank is decreased, so that the tension must be decreased, but the tension must be higher than at the point *f* due to the reinforcing yarn used for the knitting of the soles. At the points *k* and *l* the tension must be gradually decreased, whereby the tension at the point *k* is less than at the point *f*. If the points *f*, *g*, *h*, *i*, *k* and *l* respectively are reached, the contact point **154** contacts the terminals VI, VII, VIII, IX, X and XI respectively. These points, however, are not connected to consecutive points of the rheostat in order to obtain the above mentioned unsteady and varying increasing and decreasing of the tension applied to the take-up reel by the torque motor. Terminal VI is connected to c_9, terminal VII is connected to c_8, terminal VIII is connected to c_6, terminal IX is connected to c_7, terminal X is connected to c_{10} and terminal XI is connected to c_{11}.

While in the drawings the points c_1, c_2 . . . c_{11} indicating the positions of the sliding members **124** are equally distanced from each other, so that the resistance is equally increased between any of two consecutive points, the sliding members may be arranged in unequal distances from each other depending on the degree of resistance or tension respectively required for the individual points *a*—*l* during the knitting of the stocking blank.

If a different type of stocking blank shall be knitted, for example a stocking blank **210** shown in Fig. 8, the sliding members **124** may be arranged in different positions on the coils and may be connected to the terminals I, II . . . XI in a different manner. For the sake of simplicity, however, it may be assumed that for the knitting of a stocking blank according to Fig. 8 the sliding members **124** may be retained in the same positions as is necessary for the knitting of a stocking blank according to Fig. 9. Thus, the points c_1, c_2, c_3 . . . c_{11} of Fig. 7 remain unchanged. Furthermore, the connections of the terminals I—VI with the points c_1—c_5 and c_9 respectively may be retained. The terminal VII, however, is connected with c_7, and both terminals VIII and IX are connected with c_8. The buttons **204** are arranged on the chain in such a manner, that, during the knitting of the fabric between the points *h* and *i* requiring a constant tension, the contact point **154** contacts both terminals VIII and IX. The terminal X is connected with c_{10}, and the terminal XI is connected with c_{11}. The point c_6 of the rheostat is left unconnected.

The above explanations show, that my tension-regulating device may be easily adjusted to the knitting of any type of stocking blanks by an alteration of the connections between the terminals I—XI and the points c_1—c_{11} and/or a displacement of the points c_1—c_{11}.

As shown in Fig. 7, preferably additional adjustable resistances *r* are arranged in series with the coils C of the rheostat. These resistances permit the knitting of stocking blanks of the same type, for example full-fashioned combination stocking blanks according to Fig. 9, of heavier or lighter yarn without any change of the points c_1 and c_{11} and their connections to the terminals I—XI as shown in Fig. 7. If, for example, the stocking blank shall be knitted of a heavier yarn than the stocking blank described above, a proportional higher degree of tension must be applied to the take-up reel during the entire knitting of the stocking blank. On the other hand, a lighter yarn requires a proportional smaller tension. In order to adjust the tension-regulating device to these requirements, the contact finger of each of the resistances *r* is brought in contact with any one of the terminals *r*, r_3 or r_4, so that a suitable additional resistance is inserted in the line leading to the motor, which provides a proportional higher or smaller tension caused by the action of the motor. Said additional resistances *r* may also be used to adjust the tension-regulating device according to the humidity of the air, which has an influence on the tension to be applied to the take-up reel.

It is desirable, that during the narrowing operations of the knitting mechanism the fabric **28** (Fig. 1) is released from any tension. For this purpose, I provide a lever **212** (Figs. 2 and 4) swingably mounted on the frame **32**. A feed rack **214** is hinged to the upper end of the lever **212** and is held in its position by means of a spring **216**, which is secured to the lever **212** by screws **218** and abuts against the right hand end of the rack **214** as seen in Fig. 4. A ratchet wheel **220** is keyed to the shaft **26**, which is connected to the shaft **40** by means of the flexible coupling **34**, **42**, **44**. If the upper end of the lever **212** swings in the direction of the arrow A (Fig. 4), the feed rack engages with the ratchet wheel **220** and rotates same to a certain extent in the direction of the arrow B against the action of the torque motor, which rotates the shaft **40** and shaft **26** in the direction of the arrow D. The relative movement between the shaft **26** and the shaft **40** is possible, as the flexible coupling is provided with the spring **44**. If the feed rack

214 is in engagement with the ratchet wheel 220 and rotates same against the action of the torque motor, the take-up reel is released from the tension caused by the torque motor. The swinging movement of the lever 212 is obtained by the following mechanism: The lower end of the lever 212 is provided with a roller 222. A spring 223 acting on the lever 212 holds the roller 222 in contact either with the disc 224 or with the cam 226, which are secured to the shaft 228 journalled in the frame of the knitting machine. If during the normal knitting of the stocking blank the roller 222 is in contact with the disc 224, the lever 212 remains in the position shown in Fig. 4. If, however, during the narrowing operations the rotating shaft 228 is shifted, so that the roller 222 is in engagement with the cam 226, the upper end of the lever 212 is swung in the direction of the arrow A and releases the take-up reel from the tension applied thereto by the torque motor as described above. If the narrowing operation is terminated and the lever 212 is returned into the position shown in Fig. 4, the spring 44 of the flexible coupling returns the ratchet wheel 220, and the torque motor again applies the tension to the take-up reel.

The operation of the tension-regulating device is as follows:

The buttons 204 of the chain mechanism are placed in proper positions, the resistances r and the sliding members on the coils C of the rheostat are set, and the points c_1—c_{11} are connected with the terminals I—XI as is necessary for the knitting of a certain type of stocking blanks. The contact point 154 of the distributor switch is in the position shown in Fig. 7, in which it contacts the terminal I. The locking member 100 and the lever 90 of the brake mechanism are still in the position shown in dash and dotted lines, so that the torque motor 72 is arrested and no tension is applied to the take-up reel 24.

The operator starts to knit the first loop course of the welt, whereby the brake mechanism remains in the above described active position, so that the torque motor does not apply any tension to the take-up reel. As soon as the first loop course of the welt is finished and is engaged with the take-up hooks connected to the take-up reel, the operator rotates the lever 90 of the brake mechanism about its pivot 92 and engages the hook 96 of the lever 90 with the locking member 100, so that the parts occupy the positions shown in full lines in Fig. 5 and the brake is rendered inactive. Now, the torque motor applies a tension to the take-up reel thereby rotating same in accordance with the delivery of knitted fabric by the machine. After the completion of the welt the chain mechanism controls the knitting mechanism to start the knitting of the leg portion at the point b and controls at the same time the distributor switch to rotate the contact point 154, so that the latter contacts the terminal II and the torque motor applies a tension of lower degree to the take-up reel. The controlling of the distributor switch continues in accordance with the knitting of the stocking blank. Thus, if the point l is reached, the contact point 154 contacts the terminal XI, so that the torque motor applies a tension of low degree to the take-up reel for the knitting of the ravel courses 230 (Fig. 9). If the ravel courses are completed, the fabric is pressed off, so that the centrifugal weights 110 of the brake mechanism lift the locking member 100 and brake is automatically rendered active to arrest the torque motor. Thus, the take-up reel is released from any tension. During the subsequent usual idle running of the knitting machine for a few courses to liberate the yarn from the needles, the chain mechanism causes the contact point 154 of the distributor switch to contact the terminal I, so that at the end of a cycle of the knitting machine the distributor switch is returned into its starting position. The brake is still in its active position arresting the torque motor, so that no tension is applied to the take-up reel. The knitting machine equipped with the tension-regulating device is ready for a new cycle to be carried out in the same manner as described above.

If, for any reason whatsoever, the operator wishes to release the take-up reel from tension, he lifts the locking member 100 by hand, so that the lever 90 is released and the brake is rendered active to stop the torque motor.

While the drawings do not show a switch to interrupt the line between the electric source and the torque motor, obviously such a switch may be arranged or included in the distributor switch, if desired.

According to the arrangement shown in Figs. 1 to 6, the distributor switch 116 of the tension-regulating device is controlled by a row of the usual main chain mechanism of the knitting machine. In a great number of cases, however, the main chain mechanism of a knitting machine, which is already in use, has no free row which could be used for the control of the tension-regulating device, or there is no space left for the arrangement of an additional chain row. In order to avoid this disadvantage, I provide a second chain mechanism, which controls the distributor switch and is controlled by a control device driven by the main shaft of the knitting machine. Figs. 10–17 illustrate such an embodiment of my invention.

Likewise in the arrangement shown in Figs. 1–6, the tension-regulating device according to Figs. 10–17 comprises a torque motor 72 connected to the take-up reel through the medium of the reduction gear 64, 62, 56, 54 and the flexible coupling 34, 42, 44. Furthermore, the rheostat 114 and the distributor switch 116 mounted on the knitting machine are arranged in the line leading to the torque motor, so that a rotation of the distributor switch 116 by means of the pawl 180 controls the torque motor. The rod 192, however, which is hinged to the lower end of the swingable lever 188 actuating the pawl 180 is not connected to one of the levers 196 actuated by buttons on one row of the chain 206 of the main chain mechanism controlling the knitting mechanism in the usual manner. The rod 192, however, is hinged to one end of a bell-crank lever 232 (see Fig. 10) which is pivotally mounted on the frame of the knitting machine at 234. The other end of said bell-crank lever 232 is hinged to one end of a rod 236. The other end of the rod 236 is linked to the lower end of a swingable lever 238. The lever 238 is pivotally mounted at 240 on the wall of a casing 242 supported by a rail 244 of the knitting machine. The upper end of the swingable lever 238 is provided with an acute angled projection 246, which cooperates with acute angled buttons 248 (see Fig. 16) arranged on the additional chain mechanism 250. As soon as one of the members of the chain 250 carrying such a button 248 is moved opposite to said projection 246, the button 248 causes the lever 238 to swing about its pivot 240, whereby the distributor switch 116 is ac-

tuated through the connections above described. As soon as during the movement of the member of the chain the point of the button **248** comes past the point of the projection **246**, a tension spring **249** stretched between the lever **238** and a stationary point **251** returns the lever **238** into its original position, so that the point of the projection **246** contacts the member of the chain carrying the button **248** behind said button, when the chain is arrested.

The chain **250** has two rows of links **252** and **254** for a purpose to be described later on. The chain **250** is in engagement with an upper sprocket **256** and a lower sprocket **258**. The upper sprocket **256** is rotatably mounted on a stationary shaft **260**, which is carried by hubs **262** of the casing **242** and is held in its position by set screws **264**. The lower sprocket **258** is rotatably mounted on a stationary stud **266** inserted in a hole of a plate **268** and held in its position by a set screw **270**. The plate **268** is provided with two slots **272** and may be adjusted to a predetermined position by means of screws **274**, which are passed through said slots and threaded into a body **276** secured to the rail **244**. The above described adjusting means permit an easy replacement of the chain **250** by a chain of different pattern or length, and furthermore, the chain used in the device may be easily stretched.

As will be seen from the drawings, the additional chain **250** is of comparatively short length, so that the chain cannot be advanced during every revolution of the main shaft of the knitting machine. In order to provide a proper advancing movement of the chain and to render possible an engagement between the buttons **248** of the chain and the projecting end **246** of the lever **238** in timed relationship to the knitting operations, I provide a control device, which will be described hereinafter.

As best shown in Figs. 10 and 11, the usual draw lever **278**, which is driven by the main shaft (not shown) and controls the frictions, yarn carriers and slur cocks, is hinged to an oscillating lever **280** at **282**. The lever **280** is pivotally mounted at **284** on a body **286** secured to the rail **244**. One end of a connecting rod **288** is also hinged to the oscillating lever **280** at **282**. The other end of the connecting rod **288** is linked to a crank **290** keyed to a shaft **292** (see Fig. 17) journalled in bearings of the casing **242**. The connecting rod **288** serves to transfer the oscillating movements of the lever **280** to the shaft **292**. Cams **294** and **296** (see Figs. 12–14 and 17) are keyed to the shaft **292**. A roller **298** arranged at the lower end of a bell-crank lever **300** rotatably mounted on the shaft **260** cooperates with the cam **294**. A roller **302** arranged at the lower end of a bell-crank lever **304** rotatably mounted on the shaft **260** cooperates with the cam **296**. The upper end of the bell-crank lever **300** carries a pawl **306** cooperating with a ratchet wheel **308** rotatably arranged on the shaft **260**. The upper end of the bell-crank lever **304** carries a pawl **310** coooperating with a ratchet wheel **312** rotatably mounted on the shaft **260**. A disc **314** rotatably mounted on the shaft **260** is secured to the ratchet wheel **308** by screws **316** and rotates therewith. Said disc is provided with a cam-like projection **318** at one point of its circumference. Said projection may be engaged with a projecting end **320** of a member **322** provided with an elongated slot **324** being in engagement with the shaft **260**. A compression spring **326** arranged between the casing and the member **322** urges the latter upwardly, so that the upper edge **328** of the member **322** holds the pawl **310** in a plane above the circumference of the ratchet wheel **312** and renders the pawl **310** inactive, if the projecting end **320** contacts with the round portion of the circumference of the disk **314**, as shown in Fig. 14. If the projection **318** of the disc is in engagement with the projecting end **320** of the member **322**, as shown in Figs. 13, 15 and 17, the member **322** is pressed downwards against the action of the compression spring **326**, so that the upper edge **328** of the member **322** is disengaged from the pawl **310** and the latter may fall into a space between two teeth of the ratchet wheel **312** by gravity or by a spring (not shown) and may actuate same. The ratchet wheel **312** is positively secured to the sprocket **256** by means of pins **330** or the like, so that a feed motion of the ratchet wheel **312** causes a feed motion of the sprocket **256** and an advancing movement of the chain **250**.

Moreover, the shaft **260** carries a body **332**, which is slidably arranged thereon by means of an elongated opening **334**. A tension spring **336**, arranged between the casing and said body, tends to draw the body downwards, so that the downward extending left hand end **338** of the body, which projects from the casing is held in engagement with the row **254** of the chain **250**. If a button **340** arranged on said row **254** comes in engagement with the end **338**, as shown in Fig. 15, the body **332** is lifted against the action of the tension spring **336** and its edge **341** holds the pawl **306** in a plane above the circumference of the ratchet wheel **308** and renders the pawl **306** inactive. If, however, the end **338** is opposite to a member of the chain **254**, which does not carry a button as shown in Fig. 17, the tension spring **336** draws the body **332** downwards and disengages its edge **341** from the pawl **306**, so that the latter falls into a space between two teeth of the ratchet wheel **308** and may actuate same.

The operation of the control device is as follows:

The cams **294** and **296** are of such a shape and are arranged in such a relation to each other, that during the movement of the crank **290** from the point F to the point G (see Fig. 14) the bell-crank lever **300** is rotated by the cam **294**, while the bell-crank lever **304** remains in its original position, whereupon during the movement of the crank **290** from the point G to the point H (Figs. 12 and 13) the bell-crank lever **304** is rotated by the cam **296**, while the bell-crank lever **300** remains in its rotated position. Likewise, first the bell-crank lever **304** and then the bell-crank lever **300** are returned into their starting positions, when the crank **290** is swung back from the position H to the position F.

As long as the projecting end **320** of the member **322** contacts the round portion of the disc **314**, as shown in Fig. 14, the swinging movements of the crank **290** will cause a rotation of the ratchet wheel **308** by means of the cam **294**, bell-crank lever **300** and the pawl **306**, while the ratchet wheel **312** and the chain **250** are not rotated, as the edge **328** of the member **322** disengages the pawl **310** from the ratchet wheel **312**, so that the movements of the pawl **310** by means of the cam **296** and bell-crank lever **304** have no effect.

Now, if during the rotation of the ratchet wheel **308** the projection **318** of the disc **314** secured to said ratchet wheel **308** is engaged with the pro-

jecting end 320 of the member 322, the latter is moved downwards against the action of the compression spring 326, so that the edge 328 of the member 322 is disengaged from the pawl 310 and the latter drops into a space between two teeth of the ratchet wheel 312 as shown in Figs. 13 and 17. As mentioned above, the cam 294 rotates the bell-crank lever 300 during its movement from the point F to the point G, while the cam 296 does not actuate the bell-crank lever 304 during this period. Therefore, the ratchet wheel 308 is already rotated and the projection 318 is already engaged with the projecting end 320, if the crank 290 has reached the point G. Now, during the further movement of the crank 290 from the point G to the point H, the bell-crank lever 300 remains in its position, while the bell-crank lever 304 is rotated by the cam 296, so that the projection 318 remains in engagement with the projecting end 320 during this period. Now, as owing to the engagement of the projection 318 and the projecting end 320 with each other the pawl 310 is engaged with the ratchet wheel 312 as shown in Figs. 13 and 17, the ratchet wheel 312 is rotated by the cam 296, if the crank 290 is moved from the point G to the point H. At the same time the chain 250 is advanced in accordance with the feed motion of the ratchet wheel 312 by the pawl 310; as the sprocket 256 is secured to the ratchet wheel 312 by the pins 330. If said advancing movement of the chain 250 brings a button 248 (see Fig. 16) of the row 252 in engagement with the projecting end 246 of the lever 238, the distributor switch 116 is actuated, so that the contact point 154 is brought in contact with the next terminal to change the tension applied to the take-up reel by the torque motor. If, however, the above described advancing movement of the chain 250 brings a member of the row 252 in contact with the projecting end 246 and said member does not carry a button, the lever 238 and the distributor switch 116 will not be actuated, so that the tension on the take-up reel remains unchanged.

If during the above described advancing movement of the chain 250 the member of the row 254, which is in contact with the end 338 of the body 332, does not carry a button, as shown in Fig. 17, the tension spring 336 retains the body 332 in its downward position, so that the edge 341 of the body 332 is disengaged from the pawl 306, which remains in engagement with the ratchet wheel 308. Therefore, the next movement of the crank 290 from the point F to the point G causes a further rotation of the ratchet wheel 308, so that the projection 318 of the disc 314 is disengaged from the projecting end 320 of the member 322. Thus, the compression spring 326 urges the member 322 upwardly in order to disengage the pawl 310 from the ratchet wheel 312, so that the movement of the pawl 310 during the movement of the crank 290 from the point G to the point H has no effect and the chain 250 remains in its position. The chain 250 will not be advanced during the further oscillating movements of the crank 290 until after a certain number of feed movements of the ratchet wheel 308 by the pawl 306 the projection 318 again engages the projecting end 320. Then, the chain 250 is advanced by the action of the pawl 310 during the movement of the crank 290 from the point G to the point H.

If every stroke of the draw lever 278 (Figs. 10 and 11) would cause a feed motion of the ratchet wheel 308 (Figs. 14 and 17) by means of the pawl 306, the advancing movement of the chain 250 would only take place at regular intervals after a certain number of revolutions of the main shaft, which are necessary for bringing the projection 318 in contact with the projecting end 320. On the other hand, the main shaft also controls the knitting mechanism. It might be, however, that the number of revolutions of the main shaft which are performed during the knitting of the stocking blank from the point *a* to the point *b* or *b* to *c* etc. (see Fig. 9) are not an integral multiple of the above mentioned numbers of revolutions for the performance of a feed motion of the chain 250. Therefore, I provide means to cause an advancing movement of the chain 250 at irregular intervals, if necessary. If such irregular movements of the chain 250 are desired, a button 340 is arranged on a member of the row 254 of the chain 250 as shown in Fig. 15. Now, if the projection 318 engages the projecting end 320 and the pawl 310 causes a feed motion of the ratchet wheel 312 advancing the chain 250, a button 340 engages with the end 338 of the body 332, which is lifted against the action of the tension spring 336. This lifting movement of the body 332 disengages the pawl 306 from the ratchet wheel 308, by means of the edge 341, so that the next movement of the crank 290 from the point F to the point G does not rotate the ratchet wheel 308 and the projection 318 remains in contact with the projecting end 320. Therefore, the subsequent movement of the crank 290 from the point G to the point H causes a feed motion of the ratchet wheel 312 by the pawl 310 and the chain 250 is advanced to the same extent. If said advancing movement of the chain 250 brings another button 340 in contact with the end 338, the projection 318 again remains in contact with the projecting end 320 during the next swinging movement of the crank 290 and the chain 250 will again be advanced. Said advancing movements are repeated as long as a button 340 contacts with the end 338, but as soon as the member of the row 254 of the chain does not carry a button, as shown in Fig. 17, the tension spring 336 draws the body 332 downwards, and no further advancing movement of the chain 250 takes place, until after a certain number of feed motions of the ratchet wheel 308 the projection 318 again engages the projecting end 320.

The above explanations show that the ratchet wheel 308 controls the ratchet wheel 312, and that the row 254 of the chain 250 driven by the ratchet wheel 312 in turn controls the ratchet wheel 308, so that any desired feed motion of the chain 250 may be obtained.

The chain 250 may be advanced at regular intervals or at irregular intervals. Furthermore, the control device may be advanced in such a manner that, for a certain period, every stroke of the draw lever 278 causes an advancing movement of the chain 250. Obviously, however, the distributor switch 116 is only actuated, if the advancing movement of the chain 250 brings a button 248 of the row 252 in contact with the projection 246 of the lever 238. The above described control device permits an easy and exact adjustment of the tension-regulating device to the knitting operations during the knitting of the stocking blanks. According to the drawings, the control device is driven by the draw lever 278 controlled by the main shaft of the knitting machine, but the control device could be operatively connected to the main shaft in any other manner, if desired. Moreover, I do not want to be lim-

ited to the use of the control device for controlling a chain mechanism of a knitting machine. The control device could be used for any other purpose, if desired.

I have described preferred embodiments of my invention, but it is clear that numerous changes and omissions may be made without departing from the spirit of my invention.

What I claim is:

1. An attachment for a full-fashioned knitting machine provided with a fabric take-up reel, comprising electrical means adapted to be connected to said take-up reel for applying tension thereto, and an automatic electrical control mechanism associated with said electrical means for causing same to apply different degrees of tension to said take-up reel in dependence on the progress of the knitting of the full-fashioned fabric during the operation of the knitting machine.

2. An attachment for a full-fashioned knitting machine provided with a fabric take-up reel, comprising a torque motor to be coupled with said take-up reel for applying tension thereto, and an automatic electrical control mechanism associated with said torque motor for causing same to apply different degrees of tension to said take-up reel in dependence on the progress of the knitting of the full-fashioned fabric during the operation of the knitting machine.

3. An attachment for a full-fashioned knitting machine provided with a fabric take-up reel, comprising a torque motor to be coupled with said take-up reel for applying tension thereto, and an automatic electrical control mechanism associated with said torque motor for causing same to apply different degrees of tension to said take-up reel during the operation of the knitting machine, said automatic electrical control mechanism comprising a rheostat and a distributor switch to be coupled with a pattern chain control of the knitting machine, said distributor switch having a plurality of terminals and a contact member movably arranged for successively connecting one of said terminals with said torque motor, and said terminals being electrically connected to various points of said rheostat.

4. An attachment for a full-fashioned knitting machine as claimed in claim 3, in which at least a portion of consecutive terminals of the distributor switch are electrically connected to non-consecutive points of the rheostat for causing said torque motor to apply to the take-up reel different degrees of tension varying from higher degrees to lower degrees and from lower degrees to higher degrees depending on the progress of the knitting of the full-fashioned stocking blank.

5. A full-fashioned knitting machine, comprising a knitting mechanism, a fabric take-up reel, a chain mechanism, a main shaft controlling said chain mechanism and said knitting mechanism, a torque motor connected to said take-up reel for applying tension thereto, and an electrical control mechanism associated with said torque motor for causing same to apply different degrees of tension to said take-up reel during the operation of the knitting machine, said chain mechanism controlling said electrical control mechanism, and said electrical control mechanism including adjustable means adapted to cause a decrease and an increase of the tension applied to the take-up reel in dependence on the progress of the knitting of the full-fashioned fabric.

6. A knitting machine for knitting stocking blanks, comprising a knitting mechanism, a fabric take-up reel, a chain mechanism, a main shaft controlling said chain mechanism and said knitting mechanism, a torque motor connected to said take-up reel for applying tension thereto, and an electrical control mechanism associated with said torque motor for causing same to apply different degrees of tension to said take-up reel during the operation of the knitting machine, said electrical control mechanism comprising a rheostat and a rotatable distributor switch, said distributor switch having a plurality of terminals and a contact member movably arranged for successively connecting one of said terminals with said torque motor, said terminals being electrically connected to various points of said rheostat, and said chain mechanism controlling said rotatable distributor switch and returning the latter to its normal starting position after the completion of every cycle of the knitting machine during which a stocking blank is knitted.

7. A knitting machine, comprising a knitting mechanism, a fabric take-up reel, a chain mechanism, a main shaft controlling said chain mechanism and said knitting machine, a torque motor, a flexible coupling arranged between said torque motor and said take-up reel, said torque motor being arranged to apply tension to said take-up reel, and an electrical control mechanism associated with said torque motor for causing same to apply different degrees of tension to said take-up reel during the operation of the knitting machine, said chain mechanism controlling said electrical control mechanism.

8. A knitting machine, comprising a knitting mechanism, a fabric take-up reel, a chain mechanism, a main shaft controlling said chain mechanism and said knitting machine, a torque motor, a flexible coupling, said coupling comprising two coupling elements and resilient means connecting same with each other, one of said coupling elements being connected to said torque motor, the other coupling element being connected to said take-up reel, said torque motor being arranged to apply tension to said take-up reel, a device for releasing said take-up reel from the tension applied thereto, said device being controlled by said main shaft to cause a temporary relative movement of the coupling element connected to the take-up reel with respect to the other coupling element against the action of the resilient means, and an electrical control mechanism associated with said torque motor for causing same to apply different degrees of tension to said take-up reel during the operation of the knitting machine, said chain mechanism controlling said electrical control mechanism.

9. A knitting machine, comprising a knitting mechanism, a fabric take-up reel, a chain mechanism, a main shaft controlling said chain mechanism and said knitting mechanism, a torque motor connected to said take-up reel for applying tension thereto, a brake mechanism connected to said torque motor for arresting same, said brake mechanism being provided with locking means normally holding same in inactive position, means for releasing said locking means arranged in said brake mechanism, and an electrical control mechanism associated with said torque motor for causing same to apply different degrees of tension to said take-up reel during the operation of the knitting machine, said chain mechanism controlling said electrical control mechanism.

10. A knitting machine, comprising a knitting mechanism, a fabric take-up reel, a chain mechanism, a main shaft controlling said chain mechanism and said knitting mechanism, a torque mo-

tor connected to said take-up reel for applying tension thereto, a brake mechanism connected to said torque motor for arresting same, said brake mechanism being provided with locking means normally holding same in active position, manual means for releasing said locking means arranged in said brake mechanism, automatic means positioned in said brake mechanism for releasing said locking means at a predetermined speed of the torque motor, and an electrical control mechanism associated with said torque motor for causing same to apply different degrees of tension to said take-up reel during the operation of the knitting machine, said chain mechanism controlling said electrical control mechanism.

11. A knitting machine, comprising a knitting mechanism, a fabric take-up reel, a chain mechanism, a main shaft controlling said chain mechanism and said knitting mechanism, a torque motor connected to said take-up reel for applying tension thereto, a brake mechanism connected to said torque motor for arresting same, a stationary housing, a rod journalled in said housing and positively connected to said torque motor, said housing being provided with an opening, a locking member slidably arranged in said opening, one end of said locking member forming a handle, the other end of said locking member normally extending into said housing, the body of said locking member being provided with a slot external to said housing, a lever movably mounted on said housing, the free end of said lever normally passing through said slot and being engaged with said locking member, said lever normally holding said brake mechanism in inactive position, a spring acting on said lever for disengaging same from said locking member when the latter is displaced, centrifugal control means arranged within said housing, said centrifugal control means being responsive to the rotation of said rod and contacting the inwardly extending end of said locking member at a predetermined speed of the rod for displacing said locking member and releasing said lever to render the brake mechanism active, and an electrical control mechanism associated with said torque motor for causing same to apply different degrees of tension to said take-up reel during the operation of the knitting machine, said chain mechanism controlling said electrical control mechanism.

12. A full-fashioned knitting machine, comprising a knitting mechanism, a fabric take-up reel, a chain mechanism, a main shaft controlling said chain mechanism and said knitting mechanism, a torque motor connected to said take-up reel for applying tension thereto, an electrical resistance and a distributor switch arranged in the power line for the torque motor, said distributor switch being provided with a plurality of terminals and a contact member movably arranged for successively connecting one of said terminals with said torque motor, said terminals being electrically connected to different points of said resistance, and an actuating mechanism for moving said contact member, said actuating mechanism being controlled by said chain mechanism.

13. A full-fashioned knitting machine, comprising a knitting mechanism, a fabric take-up reel, a chain mechanism, a main shaft controlling said chain mechanism and said knitting mechanism, a torque motor connected to said take-up reel for applying tension thereto, a rheostat and a distributor switch arranged in the power line for the torque motor, said rheostat being provided with at least one coil, adjustable sliding members arranged on different points of said coil, said distributor switch being provided with a plurality of terminals and a contact member movably arranged for successively connecting one of said terminals with said torque motor, said terminals being electrically connected to said adjustable sliding members, and an actuating mechanism for moving said contact member, said actuating mechanism being controlled by said chain mechanism.

14. A full-fashioned knitting machine as claimed in claim 12, in which at least a portion of consecutive terminals of the distributor switch are electrically connected to non-consecutive points of said resistance, so that the different degrees of tension applied to the take-up reel by the torque motor vary from higher degrees to lower degrees and from lower degrees to higher degrees during the operation of the machine.

15. A full-fashioned knitting machine as claimed in claim 13, in which an additional adjustable electrical resistance is arranged in series with said rheostat.

16. A full-fashioned knitting machine, comprising a knitting mechanism, a fabric take-up reel, a main shaft, a main chain mechanism, said main shaft controlling said main chain mechanism, said main chain mechanism controlling said knitting mechanism, a second chain mechanism, a control device controlling said second chain mechanism, said control device being operatively connected to said main shaft, a torque motor connected to said take-up reel for applying tension thereto, and an electrical control mechanism associated with said torque motor for causing same to apply different degrees of tension to said take-up reel during the operation of the knitting machine, said second chain mechanism controlling said electrical control mechanism.

17. A knitting machine as claimed in claim 16, said control device comprising means for advancing said second chain mechanism at irregular intervals.

18. In a full-fashioned knitting machine, the combination with fabric knitting means, and fabric take-off means; of an electrical device adapted to apply to the fabric take-off means tensions of different predetermined degrees automatically varying at predetermined intervals in dependence on the progress of the knitting of the full-fashioned fabric, and an adjustable control mechanism associated with said electrical device for causing a variation of the tensions from higher degrees to lower degrees and from lower degrees to higher degrees during the knitting of the full-fashioned fabric.

19. In a full-fashioned knitting machine, the combination with fabric knitting means, a pattern chain control, and fabric take-off means; of an electrical device adapted to apply to the fabric take-off means tensions of different predetermined degrees automatically varying at predetermined intervals in dependence on the progress of the knitting of the full-fashioned fabric, and an adjustable control mechanism governed by said pattern chain and associated with said electrical device for causing a variation of the tension from higher degrees to lower degrees and from lower degrees to higher degrees during the knitting of the full-fashioned fabric.

20. In a full-fashioned knitting machine, the combination with fabric knitting means, a pattern chain control, and fabric take-off means; of

an electrical device adapted to apply to the fabric take-off means tensions of different predetermined degrees automatically varying at predetermined intervals in dependence on the progress of the knitting of the full-fashioned fabric, and an electrical control mechanism governed by said pattern chain and associated with said electrical device for causing the variation of the tensions, said pattern chain returning said electrical control mechanism to its starting position after the completion of every cycle of the knitting machine during which a full-fashioned fabric is knitted.

FRITZ LAMBACH.