COMPUTER CONTROL OF HYDROCARBON CONVERSION

Filed June 14, 1962 2 Sheets-Sheet 1

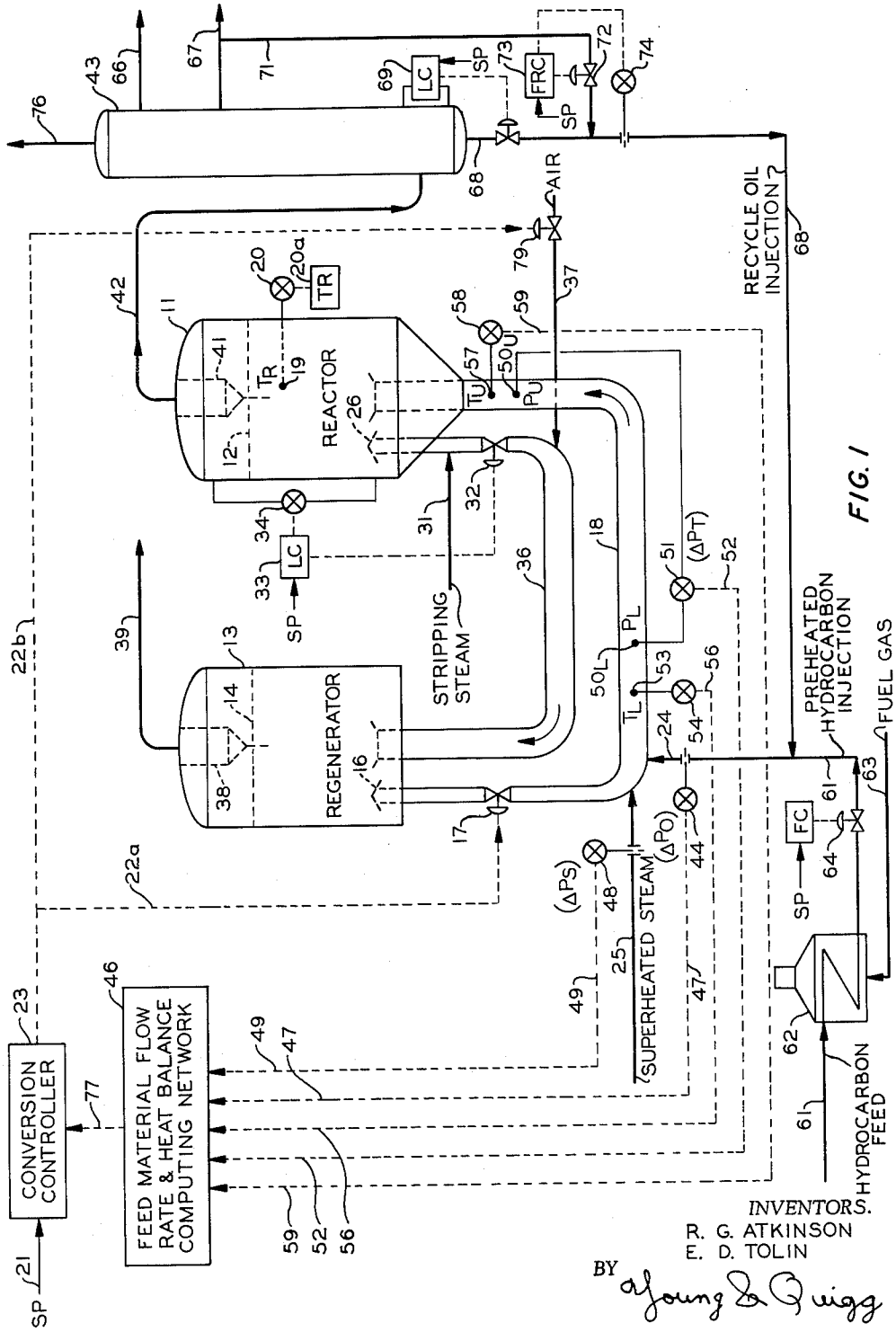

FIG. 1

INVENTORS.
R. G. ATKINSON
E. D. TOLIN
BY Young & Quigg
ATTORNEYS

COMPUTER CONTROL OF HYDROCARBON CONVERSION

Filed June 14, 1962 2 Sheets-Sheet 2

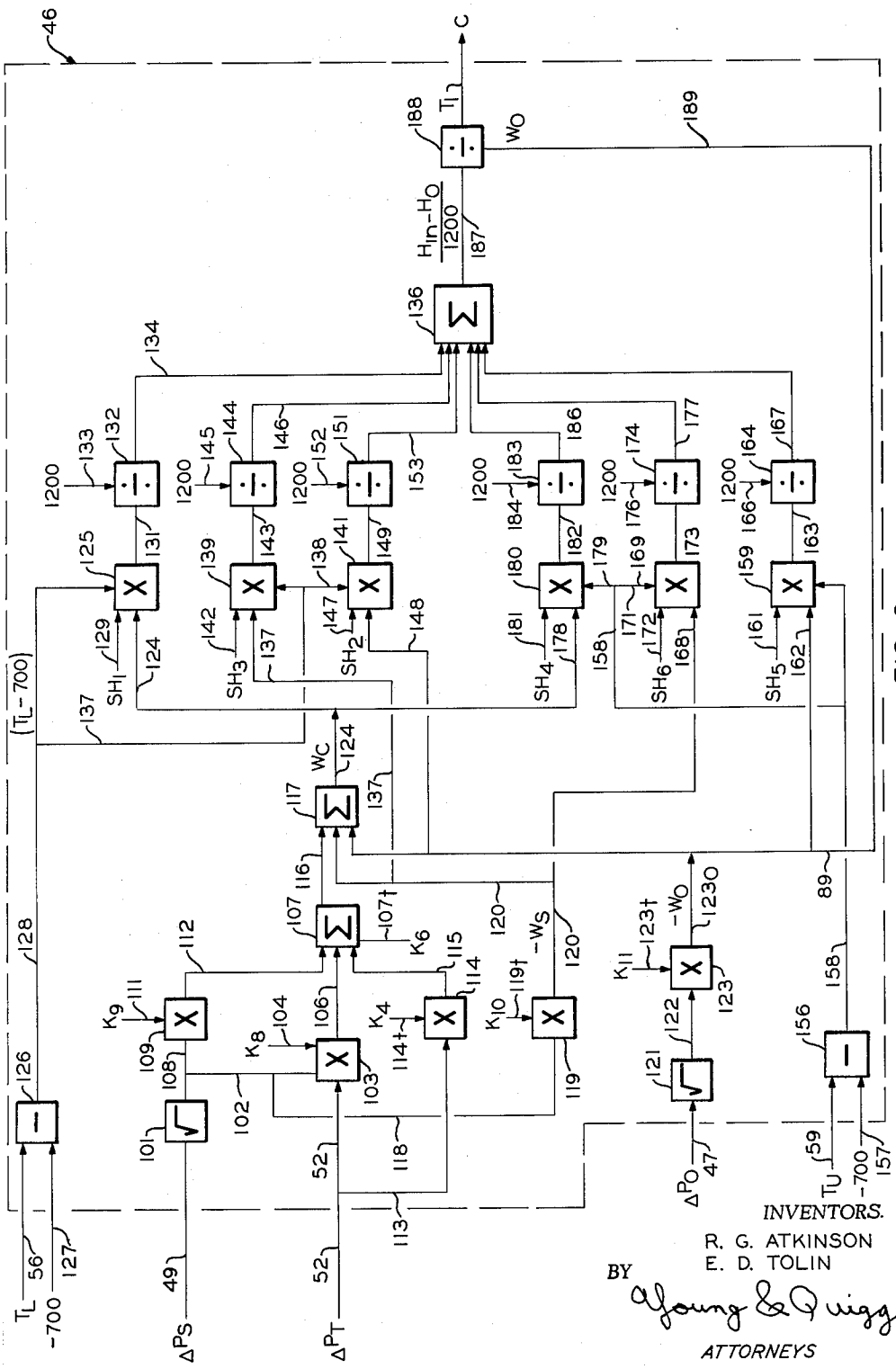

FIG. 2

INVENTORS.
R. G. ATKINSON
E. D. TOLIN

BY Young & Quigg
ATTORNEYS

United States Patent Office

3,213,014

Patented Oct. 19, 1965

1

3,213,014
COMPUTER CONTROL OF HYDROCARBON CONVERSION

Robert G. Atkinson and Ernest D. Tolin, Bartlesville, Okla., assignors to Phillips Petroleum Company, a corporation of Delaware

Filed June 14, 1962, Ser. No. 202,531
10 Claims. (Cl. 208—113)

This invention relates to a method and apparatus for automatically measuring hydrocarbon conversion and controlling the "depth of cracking" thereby in the fluidized catalyst cracking of petroleum oils.

The feasibility of applying computer systems to the control of continuous chemical processes is finding growing acceptance. Generally, various process measuring instruments feed data directly and automatically to the computer and the computer carries out previously specified calculations. Based on these calculations, adjustments in the settings of process control instruments are made for optimum performance of the unit process.

As applied to petroleum refining processes, and to the operation of fluid catalyst crackers, in particular, much remains to be done to realize the potential improved performance from computer control of process variables. One of the major variables or "operating guides" in catalytic cracking is hydrocarbon feed conversion, or "depth of cracking," taking place in the riser of a catalytic cracking reactor. Present systems of instrumentation fail to give indication of conversion, the latter being dependent upon several factors, principally: (1) coke on the catalyst, (2) metal on the catalyst, and (3) sintering of the catalyst particles from overheating. It thus appears that if hydrocarbon conversion could be measured operationally, it would give a good index of overall cracking system activity.

We have discovered a means of determining the initial rate of conversion in the riser of a reactor, which is a measure of catalyst activity. According to our invention, we achieve this primarily by determining the total heat content of all materials passing into a catalytic reactor at a given cross-section near the bottom of the riser thereof. The total heat content, after intimate mixing of these materials, is also determined at a second point in the riser near the top thereof. The difference in these two values is equal to the heat absorbed by the cracking reaction, the heat loss from the riser and the work done by expansion of gas in the riser. The heat absorbed by the cracking reaction is divided by the product of feed hydrocarbon rate and heat of reaction per pound of hydrocarbon to obtain feed oil conversion, or "depth of cracking" occurring in the riser. By logging the aforedescribed process variables automatically, transducing them for input to a computer, the computations can be made therein automatically. A control signal is produced which is applied to regulate a motor valve that admits regenerated catalyst into the riser of the reactor, thereby permitting control of the depth of cracking. Alternately, the control signal may be used to manipulate the supply of air or oxygen to the regenerator so as to control catalyst activity. This signal may adjust both simultaneously.

The objects of our invention are: to provide a method of and apparatus for automatic control of "depth of cracking" in a fluid catalytic cracking unit by using an analog computer; to provide a method of and apparatus for monitoring hydrocarbon conversion using an analog computer in cooperation with a catalytic cracking process; and to provide automatic and continuously controlled regenerated catalyst flow to the riser, and control of the air rate to the catalyst regenerator.

Other objects, aspects, and the several advantages of

2

the invention will be apparent from a study of the disclosure, the drawing, and the appended claims.

FIGURE 1 is a block diagram of a fluidized catalytic cracking reactor, regenerator, and main fractionator, in combination with a heat balance computing analog computer for controlling regenerated catalyst flow rate to the reactor.

FIGURE 2 illustrates a schematic diagram of elements or components of a heat balance computing network which can be employed in the control system illustrated in FIGURE 1.

Reference is now made to the drawing, and to FIGURE 1 in particular, wherein there is shown a fluid catalytic cracking reactor **11** having a mobile or fluidized bed of solid particles **12** disposed therein. A catalyst regenerator **13** has a fluidized bed **14** therein, the level of which is maintained approximately constant by periodic addition of fresh catalyst. The regenerated catalyst overflows into internal outlet conduit **16**, from whence it passes through a motor-actuated slide valve **17**, and is fluidized in transfer conduit **18** before entering reactor **11**. The temperature of the hydrocarbon materials in the reactor, specifically the reactor bed, or the dense phase mixture of hydrocarbon vapor, steam, and catalyst particles, can vary. This temperature T_R, being sensed by thermocouple **19** disposed therein, connects through transducer **20** to temperature recorder **20***a*.

Slide valve **17** in transfer conduit **18** is operatively connected with a conversion controller **23**. Thus, in accordance with the set point **21** on said conversion controller, a greater or lesser quantity of hot regenerated catalyst is admixed with the hydrocarbon feed materials and steam, entering the transfer conduit **18**, via conduits **24** and **25**, with the reactor temperature, and the "depth of cracking" being thus regulated. Reactor bed **12** may comprise a mixture of catalytic particles and non-catalytic solids fluidized by hydrocarbon vapors and steam. A stream of spent catalyst material is withdrawn from bed **12** via internal conduit **26**, and then stripped by steam added through conduit **31** for oil removal. Then the stripped, coke-laden catalyst passes through another motor-actuated slide valve **32**, which is manipulated by level controller **33**, in accordance with the set point thereof, and the level measurement produced by differential pressure transmitter **34**, dropping the catalyst into transfer conduit **36**, where it is picked up by the regeneration air, and conveyed into the bottom of regenerator **13**. Air is supplied at a controlled rate via conduit **37** to conduit means **36**. Regeneration of the catalyst by the input air in fluidized bed **14** takes place at a temperature preferably between 950 and 1200° F.

The spent gases from combustion of the carbonaceous solids disposed on the catalyst, pass therefrom through a cyclone **38**, and outlet conduit **39**. Products from reactor **11**, in vapor form, pass upwardly through cyclone **41**, and outlet line **42**, to suitable recovery apparatus such as fractionator **43**, and the subsequent separation system.

Feed conduit **24** supplies a combined stream of hydrocarbon feed materials, to transfer conduit **18**, to be catalytically cracked in reactor **11**. There is disposed therein an orifice assembly and transmitter **44**, the resulting signal therefrom, designated ΔP_O, being readily correlatable with hydrocarbon material flow rate. The resulting transduced signal from transmitter **44** is transmitted to a feed material flow rate and heat balance computing network **46**, via signal line **47**.

Superheated steam feed line **25** has disposed therein an orifice assembly and transmitter **48**, the resulting signal, designated ΔP_S, therefrom being readily correlatable with flow rate, this transduced signal also being transferred to computing network **46** via signal line **49**.

Transfer conduit **18** also has disposed therein two pressure sensing means 50_L and 50_U and transmitter **51**. The differential signal therefrom, designated ΔP_T, makes it possible to calculate the total feed material flow rate. The resulting transduced signal is transmitted to computing network **46** via signal line **52**.

The temperature of the combined feed materials in the upstream or lower portion of the riser, designated T_L, is sensed by thermocouple **53** disposed therein. Thermocouple **53** connects through transducer **54** and line **56** to computing network **46**.

The temperature of the total feed materials in the downstream or upper portion of the riser, designated T_U, is sensed by thermocouple **57** disposed therein. Thermocouple **57** connects through transducer **58** and line **59** to computing network **46**.

Feed conduit **61** supplies a hydrocarbon material, to be cracked which may be an unvaporizable hydrocarbon, to oil feed conduit **24**. Feed conduit **61** is provided with a tube-type preheat furnace **62**, which is heated by combustion of fuel gas entering through conduit **63**. Also disposed in conduit **61** is a motor valve **64** which regulates the flow of the virgin gas oil into the system.

Referring again to main fractionator **43**, two product streams are removed as side draws. The streams are: light cycle oil stream **66**, and heavy cycle oil stream **67**. Main fractionator bottoms stream **68** directs nonconverted oil and recovered catalysts back to feed conduit **24**, in accordance with liquid level in the bottom of main fractionator **43**, as sensed by level controller **69**. Conduit **71** communicates between heavy cycle oil conduit **67** and bottoms slurry conduit **68**. Motor valve **72** controls the flow through conduit **71**, as directed by flow recorder controller **73**, which is connected with turbine flow meter assembly **74** disposed in conduit **68**. Gas and gasoline products pass overhead from main fractionator **43**, via conduit **76**, to separation and recovery equipment (not shown).

Computing network **46** takes the five measurement signals previously described, from lines **47**, **49**, **52** and **59**, and computes from the individual rates and temperatures of the feed materials and the heat of reaction of said materials in said riser the conversion of hydrocarbon feed materials. Network **46** produces a single output signal, representative of this conversion.

This output signal is sent via line **77** to a conversion controller **23**. A desired rate of hydrocarbon feed conversion is preset via set point **21** on controller **23**, as determined by the product desired from the reactor system. Controller **23** compares the computer output signal **77** with the set point thereon, and obtains, by conventional means, a first control signal, the magnitude of which is related to the difference between the computer signal and set point. This control signal is transmitted via line **22*a*** to motor valve **17** to change the aperture thereof. The flow rate of the regenerated catalyst through **18** is thus automatically adjusted until the desired rate of hydrocarbon conversion, or "depth of cracking," in riser **18** is attained. Increasing catalyst flow rate, increases the rate of conversion, and vice versa.

Similarly, the same signal from controller **23** can pass via line **22*b*** to motor valve **79**. Thus, a greater or lesser quantity of regeneration air is admixed with the spent catalyst in transfer conduit **36** leading to regenerator **13**, whereby the degree of catalyst regeneration is varied, until the desired catalyst activity or rate of hydrocarbon conversion is attained. Increasing regeneration air feed rate, will result in better burn off of coke on the spent catalyst, and, in turn, greater catalyst activity in the riser and reactor. Either motor valve **17** or **79** may be operated singly to manipulate the hydrocarbon conversion, simply by omitting the undesired motor valve. In a third embodiment, the control signal from controller **23** may adjust the motor valves concurrently.

In operation, all of the previously described temperature and pressure differential measurements are made and transmitted in analog form to the computing network. These signals are representative of the magnitudes of said variables and other preselected data influencing and resulting from the operations of said reactor and said regenerator.

The conventional measurement and control equipment previously described are available from many automatic controller manufacturers utilizing pneumatic or electronic energy or combinations of the two as the analog of the measurement and control signals. Likewise, equipment capable of performing the calculations given above is available in either pneumatic or electronic form, as desired, from several manufacturers. In most instances, complex automatic control and optimizing systems will use both pneumatic and electronic instrumentation, computation and control components to the best advantage. Measurement inputs and computing networks must be compatible in their analogies, therefore in some cases transducers from pneumatic to electrical signals, or vice versa, are required to achieve operability and mathematical consistency.

Conversion controller **23** and all other controllers shown are available from a choice of commercial units to perform this function. For example, there is the Foxboro M/40 controller described in Bulletin 5A–10A of November 1955 by the Foxboro Company, Foxboro, Massachusetts.

The calculation of the flow rate of the hydrocarbon feed (Wo) moving into the riser, based on the measured pressure drop ΔP_o in feed conduit **24**, is as follows:

$$W_o = K_{11}\sqrt{\Delta P_o} \tag{1}$$

ΔP_o=pressure drop across oil feed orifice, lb./ft.^{2}.
K_{11}=accumulated constant for oil feed orifice and line **24**.

The caluclation of the flow rate of the steam feed (W_s) moving into the riser, based on the measured pressure drop across steam orifice in line **25**, is as follows:

$$W_s = K_{10}\sqrt{\Delta P_s} \tag{2}$$

ΔP_s=pressure drop across steam orifice, lb./ft.^{2}.
K_{10}=accumulated constant for steam orifice and line **25**.

The calculation of the flow rate of catalyst (W_c) in the riser, based on the measured pressure drop in riser **18**, is as follows:

Catalyst flow=total flow—measured flow of steam—measured flow of oil.

Total flow is determined from pressure drop across riser (ΔP_T) as measured by P_L and P_U.

$$\Delta P_T = P_L - P_U = \frac{W}{A} + \frac{W_t L}{A(V - V_t} \tag{3}$$

Let

$$K_1 = \frac{W}{A} \tag{4}$$

$$K_2 = \frac{L}{A} \tag{5}$$

$$K_3 = V_t \tag{6}$$

Substituting 4, 5, and 6 into 3 gives

$$\Delta P_T = K_1 + \frac{W_t K_2}{V - K_3} \tag{7}$$

or

$$(\Delta P_T)V - (\Delta P_T)K_3 = K_1 V - K_1 K_3 + W_t \cdot K_2 \tag{8}$$

$$\frac{\Delta P_T V}{K_2} - \frac{\Delta P_T \cdot K_3}{K_2} = \frac{K_1 V}{K_2} - \frac{K_1 K_3}{K_2} + W_t \tag{9}$$

W=materials suspended in riser, lbs.
A=cross sectional area of riser, in ft.^{2}.
W_t=flow rate of total materials in riser, lbs./sec.

L=length of riser, in feet.
V=velocity of carrier gas in riser, ft./sec.
V_t=transport velocity of carrier, ft./sec.
K_7=accumulated constant to make V a direct function of ΔP_S.
ΔP_T=pressure drop of feed materials in riser, lbs./ft.^{2}.
$K_8=K_7/K_2$.

Letting

$$K_4=\frac{-K_3}{K_2} \quad (10)$$

$$K_5=\frac{-K_1}{K_2} \quad (11)$$

$$K_6=\frac{K_1 \cdot K_3}{K_2} \quad (12)$$

Substituting 10, 11, and 12 into 9 and rearranging gives

$$W_t=\frac{\Delta P_T \cdot V}{K_2}+\Delta P_T \cdot K_4+K_5 V+K_6 \quad (13)$$

Letting

$$V=K_7\sqrt{\Delta P_S} \quad (14)$$

Then

$$W=\frac{K_7}{K_2}(\Delta P_T)(\Delta P_S)^{1/2}+\Delta P_T \cdot K_4+K_5 K_7(\Delta P_S)^{1/2}+K_6 \quad (15)$$

Letting

$$K_8=\frac{K_7}{K_2} \quad (16)$$

$$K_9=K_5 K_7 \quad (17)$$

$$W_t=K_8(\Delta P_S)^{1/2}(\Delta P_T)+K_4(\Delta P_T)+K_9(\Delta P_S)^{1/2}+K_6 \quad (18)$$

Catalyst flow rate may now be calculated as follows:

$$W_C=W_t-W_O-W_S \quad (19)$$

W_C=flow rate of catalyst through riser, lbs./sec.
W_O=flow rate of oil into riser, lbs./sec.
W_S=flow rate of steam into riser, lbs./sec.

Hydrocarbon conversion:

$$C=\frac{H_{IN}-H_{OUT}}{(1200)(W_o)}=\frac{\text{lb. oil cracked}}{\text{lb. oil feed}}$$

wherein

W_o=flow rate of oil, lb./sec.
C=conversion in riser.
1200=heat of reaction, B.t.u. absorbed per pound of oil cracked.
$H_{IN}=H_{CI}+H_{OI}+H_{SI}$=heat content of all materials entering riser.
$H_{OUT}=H_{Co}+H_{Po}+H_{So}$=heat content of all materials leaving riser.
$H_{CI}=(W_c)(SH_1)(T_L-700)$.
$H_{OI}=(W_o)(SH_2)(T_L-700)$.
$H_{SI}=(W_s)(SH_3)(T_L-700)$.
$H_{CO}=(W_c)(SH_4)(T_U-700)$.
$H_{Po}=(W_o)(SH_5)(T_U-700)$.
$H_{SO}=(W_s)(SH_6)(T_U-700)$.
T_L=temperature in at bottom of riser, ° F.
T_U=temperature out at top of riser, ° F.
W_t=total lb./sec. moved through riser.
W_s=lb./sec. of steam feed.
W_o=lb./sec. of oil feed.
W_c=lb./sec. of catalyst moved through riser.
SH_1=specific heat of catalyst at riser inlet, B.t.u./(lb.) (° F.).
SH_2=specific heat of oil at riser inlet, B.t.u./(lb.) (° F.).
SH_3=specific heat of steam at riser inlet, B.t.u./(lb.) (° F.).
SH_4=specific heat of catalyst at riser outlet, B.t.u./(lb.) (° F.).

SH_5=specific heat of oil at riser outlet, B.t.u./(lb.) (° F.).
SH_6=specific heat of steam at riser outlet, B.t.u./(lb.) (° F.).
H_{CI}=heat content of catalyst at riser inlet, B.t.u./sec.
H_{SI}=heat content of steam at riser inlet, B.t.u./sec.
H_{OI}=heat content of oil at riser inlet, B.t.u./sec.
H_{CO}=heat content of catalyst at riser outlet, B.t.u./sec.
H_{SO}=heat content of steam at riser outlet, B.t.u./sec.
H_{PO}=heat content of product at riser outlet, B.t.u./sec.
700=datum temperature.

The utilization of these analog signals, representative of five measured variable, will now be described in more detail in connection with computing network **46** of FIGURE 2. The network is broken down into functional components. It should be understood, therefore, that the individual components of network **46** are not to be considered the invention, but rather it resides in the combination of these elements into a specific cooperation which permits the automatic computation of a certain derived process variable, herein hydrocarbon conversion, and therefrom automatically adjusting the flow rate of regenerated catalyst to the reactor to the desired value or air rate to the regenerator, or both.

Referring now to FIGURE 2, measurement signals from lines **47**, **49**, **56**, **52** and **59** are transmitted to network **46**. The signal from line **49** passes to a square root extracting component **101**. The resulting signal passes via lead **102** to a first multiplying component **103**, wherein it is multiplied by a second signal entering component **103** via line **52**. This second multiplier signal is representative of the pressure drop across the riser. A third signal enters component **103**. This third multiplier signal is the constant K_8, defined previously, which is manually set as an input signal on terminal **104** of component **103**. The product signal passes via lead **106** to first adding component **107**.

The resulting signal from component **101** simultaneously passes via lead **108** to a second multiplying component **109**, wherein said product is multiplied by a signal entering component **109**. This multiplier signal is the constant K_9, previously defined, which is manually set as an input signal on the terminal **111** of component **109**. This product signal passes via lead **112** to adding component **107**.

Input signal from lead **52** additionally passes via lead **113** to a multiplying component **114**, wherein said signal is multiplied by a signal entering component **114**. This multiplier signal is the constant K_4, previously defined, which is manually set as an input signal on the terminal **114*t*** of component **114**. This product signal passes via lead **115** to adding component **107**. A fourth signal, K_6, previously defined, is placed on terminal **107*t*** of component **107**, all of the signals being summed therein.

The resulting summed signal passes via line **116** to a second summing component **117**, said signal being representative of the flow rate of the feed materials in the riser.

The resulting signal from component **101** passes via leads **102** and **118** to a fourth multiplying component **119**, wherein said signal is multiplied by a signal entering component **119**. This multiplier signal is the constant K_{10}, previously defined, which is manually set as an input signal on the terminal **119*t*** of component **119**. This product signal, with sign reversed, passes via lead **120** to summing component **117**, serving as a first subtrahend therein.

A third input signal passes via lead **47** to a square root extracting component **121**. The resulting signal passes via lead **122** to a fifth multiplying component **123**, wherein it is multiplied by a signal entering component **123**. This multiplier signal is the constant K_{11}, previously defined, which is manually set as an input on the terminal **123*t*** of component **123**. This product signal, with sign reversed, passes via lead **123*o*** to summing component **117**, serving as a second subtrahend therein.

The resulting second summed signal passes via line **124** to sixth multiplying component **125**. This signal (W_C), being representative of the flow rate of catalyst up the riser.

A fourth input signal **56**, representative of the temperature of the feed materials in the lower end of the riser, passes to subtracting component **126** serving therein as the minuend. A signal, representative of the datum temperature of 700° F. is manually set as an input on terminal **127** of component **126**, serving as the subtrahend therein. The remainder signal passes therefrom via line **128** to multiplying component **125** to serve as a first multiplier signal therein. A second multiplier signal, the constant SH_1, previously defined, is manually set as an input on the terminal **129** of component **125**. This product signal passes via line **131** to a dividing component **132** wherein said product signal is divided by a signal entering component **132**, which is manually set as an input on terminal **133** thereof. This divisor signal is representative of the value 1200, which is the heat of reaction, per pound of feed oil cracked, expressed in B.t.u.'s. The quotient signal from component **132** passes via line **134** to third summing component **136**.

The remainder signal from component **126** also passes via lines **137** and **138** to multiplying components **139** and **141**, respectively. Regarding component **139**, a second multiplier signal, the constant SH_3, previously defined, is manually set as an input on the terminal **142** of component **139**. A product signal from multiplying component **119** passes via lines **120** and **137** to multiplying component **139** to serve as a third multiplier signal therein. This product signal passes via line **143** to a dividing component **144**, wherein said product signal is divided by a signal entering component **144**, which is manually set as an input on terminal **145** thereof. This divisor signal is again representative of the value of 1200. The quotient signal from component **144** passes via line **146** to summing component **136**.

Regarding multiplying component **141**, a multiplier signal, the constant SH_2, previously defined, is manually set as an input on the terminal **147** thereof. A product signal from component **123** passes via lines **123*o*** and **148** to multiplying component **141** to serve therein as a second multiplier signal. This product signal passes via line **149** to a dividing component **151**, wherein said product signal is divided by a signal entering component **151**, which is manually set as an input on terminal **152** thereof. This divisor signal is again representative of the value of 1200. The quotient signal from component **151**, passes via line **153** to summing component **136**.

A fifth input signal **59**, representative of the temperature of the feed materials, now partially cracked, in the upper end of the riser passes to a subtracting component **156**, serving therein as the minuend. A signal, representative of the datum temperature of 700° F. is manually set as an input on terminal **157** of component **156**, serving as the subtrahend therein. This remainder signal passes via line **158** to multiplier component **159**, to serve as a first multiplying signal therein. A second multiplying signal, the constant SH_5, previously defined, is manually set as an input on the terminal **161** of component **159**. The product signal from multiplying component **123** also passes via lines **123*o*** and **162** to multiplying component **159** to serve as a third multiplier therein. This product signal passes via line **163** to a dividing component **164**, wherein said product signal is divided by a signal entering component **164**, which is manually set on the input terminal **166** thereof. This divisor signal is the value 1200. The quotient signal from component **164** passes via line **167** to summing component **136**, with a negative sign.

The remainder signal from component **119** also passes via lines **120** and **168** to multiplying component **169**, as a first multiplier signal. The remainder signal from component **156** also passes via lines **158** and **171** to multiplier component **169**, as a second multiplier signal. A third multiplier signal, the constant SH_6, previously defined, is manually set as an input on the terminal **172** of component **169**. The product signal from multiplier component **169** passes via line **173** to a dividing component **174**, wherein said product signal is divided by a signal entering component **174**, which is manually set on the input terminal **176** thereof. This divisor signal is the value of 1200. The quotient signal from component **174**, passes via line **177** to summing component **136**, with a negative sign.

The first summed signal from summer **117** passes via lines **124** and **178** to multiplier component **180** to serve as a first multiplier signal therein. The remainder signal from component **156** also passes via lines **158** and **179** to multiplier component **180**. A third multiplier signal, the constant SH_4, previously defined, is manually set as an input on the terminal **181** of component **180**. The product signal from component **182** passes via line **182** to a dividing component **183**, wherein said product signal is divided by a signal entering component **183**, which is manually set on the input terminal **184**, thereof. This divisor signal is the value 1200. The quotient signal from component **183** passes via line **186** to summing component **136** with a negative sign.

The resulting third summed signal passes via line **187** to dividing component **188**. This signal is representative of P, the pounds of oil cracked in the riser. A product signal from component **123**, representative of the flow rate of the oil feed, passes via lines **123*o*** and **189** to dividing component **188** to serve as the divisor therein. The quotient signal is representative of percent hydrocarbon conversion from component **188**, passes via line **77** to conversion controller **23** of FIGURE 1, wherein the control signals **22*a*** and ***b*** are produced as previously described.

To one skilled in the analog computing art, it will be obvious that in many cases several mathematical operations in FIGURE 2 may be combined in one piece of computing equipment, so that the apparent number of computing steps in an actual apparatus will be reduced.

We claim:

1. Apparatus comprising: a fluid catalytic cracking reactor having a variable reactor temperature and variable catalyst bed level; a catalyst regenerator; first conduit riser means communicating between said regenerator and said reactor for conducting hot regenerated catalyst into the latter; second conduit means for feeding hydrocarbon material to be cracked communicating with said first conduit riser means; third conduit means for feeding steam communicating with said first conduit riser means; fourth conduit means communicating between said reactor and said regenerator for conducting spent catalyst to the latter; fifth conduit means for feeding air to regenerate the flowing spent catalyst communicating with said fourth conduit means; sixth conduit means communicating with the upper portion of said reactor for conducting reaction products and reacted feed material to a main fractionator; seventh conduit means communicating with the upper portion of said regenerator for conducting flue gases to vent; means for measuring the temperature of the feed materials flowing in said first conduit riser means in both the upstream and downstream portions of the latter; means for measuring the flow rate of said hydrocarbon material and said steam flowing in said second and third conduit means, respectively; means to measure the flow rate of said feed materials in said first conduit riser means; means for controlling the rate of flow of said regenerated catalyst disposed in said first conduit riser means upstream of said second and third conduit means; a computer having a fixed program; first means within said computer for computing the total heat contents of said feed materials in both the lower and upper portions of said first conduit riser means; second means within said computer for computing from the last mentioned computations the weight of oil feed cracked per unit time while in said first conduit riser means; and third means within said computer

for computing from the last mentioned computation the hydrocarbon conversion in said first conduit riser means and obtaining a derived signal representative thereof.

2. Apparatus comprising: a fluid catalytic cracking reactor having a variable reactor temperature and variable catalyst bed level; a catalyst regenerator; first conduit riser means communicating between said regenerator and said reactor for conducting hot regenerated catalyst into the latter; second conduit means for feeding hydrocarbon material to be cracked communicating with said first conduit riser means; third conduit means for feeding steam communicating with said first conduit riser means; fourth conduit means communicating between said reactor and said regenerator for conducting spent catalyst to the latter; fifth conduit means for feeding air to regenerate the flowing spent catalyst communicating with said fourth conduit means; sixth conduit means communicating with the upper portion of said reactor for conducting reaction products and reacted feed material to a main fractionator; seventh conduit means communicating with the upper portion of said regenerator for conducting flue gases to vent; eighth conduit means communicating with the bottom of said fractionator for conducting non-converted products back to said first conduit riser means; means for measuring the temperature of the feed materials flowing in said first conduit riser means in both the upstream and downstream portions of the latter; means for measuring the orifice differential pressures of said hydrocarbon material and said steam flowing in said second and third conduit riser means, respectively; means to measure the differential pressure of said materials in said first conduit means between an upstream point and a downstream point; means for controlling the rate of flow of said regenerated catalyst disposed in said first conduit means upstream of said second and third conduit means; a computer having a fixed program; first means within said computer for computing the flow rate of said feed materials, collectively and individually, from the measured differential pressures; second means within said computer for computing the total heat contents of said feed materials in both the lower and upper portions of said first conduit riser means; third means within said computer for computing from the last mentioned computations the weight of oil feed cracked per unit time while in said first conduit riser means; and fourth means within said computer for computing from the last mentioned computation the hydrocarbon conversion in said first conduit riser means and obtaining a derived signal representative thereof; conversion control means responsive to said derived signal for adjusting flow control means disposed in each of said first conduit riser means and fifth conduit means to manipulate the flow rate of regenerated catalyst and regeneration air, respectively, in order to vary reactor temperature, thereby regulating the hydrocarbon conversion to attain a preselected level.

3. Apparatus comprising: a fluid catalytic cracking reactor having a variable reactor temperature and variable catalyst bed level; a catalyst regenerator; first conduit riser means communicating between said regenerator and said reactor for conducting hot regenerated catalyst into the latter; second conduit means for feeding hydrocarbon material to be cracked communicating with said first conduit riser means; third conduit means for feeding steam communicating with said first conduit riser means; fourth conduit means communicating between said reactor and said regenerator for conducting spent catalyst to the latter; fifth conduit means for feeding air to regenerate the flowing spent catalyst communicating with said fourth conduit means; sixth conduit means communicating with the upper portion of said reactor for conducting reaction products and reacted feed material to a main fractionator; seventh conduit means communicating with the upper portion of said regenerator for conducting flue gases to vent; eighth conduit means communicating with the bottom of said fractionator for conducting non-converted products back to said first conduit riser means; means for measuring the temperature of the feed materials flowing in said first conduit riser means in both the upstream and downstream portions of the latter; means for measuring the orifice differential pressures of said hydrocarbon material and said steam flowing in said second and third conduit means, respectively; means to measure the differential pressure of said feed materials in said first conduit riser means at an upstream point and a downstream point; means for controlling the rate of flow of said regenerated catalyst disposed in said first conduit riser means upstream of said second and third conduit means; a computer having a fixed program; first means within said computer for computing the flow rate of said feed materials, collectively and individually, from the measured differential pressures; second means within said computer for computing the total heat contents of said feed materials in both the lower and upper portions of said first conduit riser means; third means within said computer for computing from the last mentioned computations the weight of oil feed cracked per unit time while in said first conduit riser means; and fourth means within said computer for computing from the last mentioned computation the hydrocarbon conversion in said first conduit riser means; and obtaining a derived signal representative thereof; and conversion control means responsive to said derived signal for adjusting flow control means disposed in said first conduit riser means to manipulate the flow rate of regenerated catalyst in order to vary reactor temperature, thereby regulating the hydrocarbon conversion to attain a preselected level.

4. Apparatus comprising: a fluid catalytic cracking reactor having a variable reactor temperature and variable catalyst bed level; a catalyst regenerator; first conduit riser means communicating between said regenerator and said reactor for conducting hot regenerated catalyst into the latter; second conduit means for feeding hydrocarbon material to be cracked communicating with said first conduit riser means; third conduit means for feeding steam communicating with said first conduit riser means; fourth conduit means communicating between said reactor and said regenerator for conducting spent catalyst to the latter; fifth conduit means for feeding air to regenerate the flowing spent catalyst communicating with said fourth conduit means; sixth conduit means communicating with the upper portion of said reactor for conducting reaction products and reacted feed material to a main fractionator; seventh conduit means communicating with the upper portion of said regenerator for conducting flue gases to vent; eighth conduit means communicating with the bottom of said fractionator for conducting non-converted products back to said first conduit riser means; means for measuring the temperature of the feed materials flowing in said first conduit riser means in both the upstream and downstream portions of the latter; means for measuring the orifice differential pressures of said hydrocarbon material and said steam flowing in said second and third conduit means, respectively; means to measure the differential pressure of said feed materials in said first conduit riser means at an upstream point and a downstream point; means for controlling the rate of flow of said regenerated catalyst disposed in said first conduit riser means upstream of said second and third conduit means; a computer having a fixed program; first means within said computer for computing the flow rate of said feed materials, collectively and individually, from the measured differential pressures; second means within said computer for computing the total heat contents of said feed materials in both the lower and upper portions of said first conduit riser means; third means within said computer for computing from the last mentioned computations the weight of oil feed cracked per unit time while in said first conduit riser means; and fourth means within said computer for computing from the last mentioned computation the hydrocarbon conversion in said first conduit riser

means; and conversion control means responsive to said derived signal for adjusting flow control means disposed in fifth conduit means to manipulate the flow rate of regeneration air in order to vary reactor temperature, thereby regulating the hydrocarbon conversion to attain a preselected level.

5. A method for automatically measuring hydrocarbon conversion in the riser of a fluidized catalytic reactor and controlling the depth of cracking of petroleum oils thereby in a catalytic cracking process responsive to a control signal calculated by a computer having a fixed program, comprising: producing a signal proportional to the individual rates of flow of the oil and steam feeds being introduced into a riser of a catalytic reactor; producing a signal proportional to the total feed material flow rate through said riser; measuring the temperature of said feed materials in the lower portion of said riser; determining by difference in flow rates of the total stream and the oil and steam feeds the flow rate of regenerated catalyst through said riser; measuring the temperature of said materials in the upper portion of said riser; producing a signal proportional to the total heat contents of said feed materials in both the lower and upper portions of said riser; producing a signal proportional to the heat absorbed by the reaction of said feed materials, producing a signal proportional to the hydrocarbon conversion in said riser to give a first signal; comparing said first signal to a constant second signal, representative of desired hydrocarbon conversion to obtain a control signal, the magnitude of which is related to the difference between said first and second signals; and adjusting both the flow rate of the regenerated catalyst to said reactor and regeneration air to said regenerator responsive to said first control signal until hydrocarbon conversion in said riser attains a desired level.

6. The method according to claim 5 wherein the flow rate of regenerated catalyst is computed according to the equations:

$$W_C = W_t - W_O - W_S$$

wherein W_t=flow rate of feed materials in riser, lbs./sec.
W_O=flow rate of oil into riser, lbs./sec.
W_S=flow rate of steam into riser, lbs./sec.

7. The method according to claim 5 wherein the unit weights of said oil feed cracked per unit time is computed according to the equations:

$$P = H_{IN} - H_{OUT}/1200$$

wherein

$$H_{IN} = Hc_I + Ho_I + Hs_I$$
$$H_{OUT} = Hc_O + Ho_O + Hs_O$$

8. The method according to claim 5 wherein the hydrocarbon conversion in the riser is computed according to the equation:

$$C = P/Wo$$

wherein
Wo=flow rate of oil into riser, lbs./sec.

9. A method for automatically measuring hydrocarbon conversion in the riser of a fluidized catalytic reactor and controlling the depth of cracking of petroleum oils thereby in a catalytic cracking process responsive to a control signal calculated by a computer having a fixed program, comprising: measuring producing a signal proportional to the individual rates of flow of the oil and steam feeds being introduced into a riser of a catalytic reactor, producing a signal proportional to the total feed material flow rate through said riser; measuring the temperature of said feed materials in the lower portion of said riser; determining by difference in flow rates of the total stream and the oil and steam feeds the flow rate of regenerated catalyst through said riser; measuring the temperature of said materials in the upper portion of said riser; producing a signal proportional to the total heat contents of said feed materials in both the lower and upper portions of said riser; producing a signal proportional to the heat absorbed by the reaction of said feed materials, producing a signal proportional to the hydrocarbon conversion in said riser to give a first signal; comparing said first signal to a constant second signal, representative of desired hydrocarbon conversion to obtain a control signal, the magnitude of which is related to the difference between said first and second signals; and adjusting the flow rate of the regenerated catalyst to said reactor responsive to said first control signal until hydrocarbon conversion in said riser attains a desired level.

10. A method for automatically measuring hydrocarbon conversion in the riser of a fluidized catalytic reactor and controlling the depth of cracking of petroleum oils thereby in a catalytic cracking process responsive to a control signal calculated by a computer having a fixed program, comprising: measuring the individual rates of flow of the oil and steam feeds being introduced into a riser of a catalytic reactor; producing a signal proportional to the total feed material flow rate through said riser; measuring the temperature of said feed materials in the lower portion of said riser; determining by difference in flow rates of the total stream and the oil and steam feeds the flow rate of regenerated catalyst through said riser; measuring the temperature of said materials in the upper portion of said riser; producing a signal proportional to signals the total heat contents of said feed materials in both the lower and upper portions of said riser; producing a signal proportional to the heat absorbed by the reaction of said feed materials, producing a signal proportional to the hydrocarbon conversion in said riser to give a first signal; comparing said first signal to a constant second signal, representative of desired hydrocarbon conversion to obtain a control signal, the magnitude of which is related to the difference between said first and second signals; and adjusting the flow rate of the regeneration air to said regenerator responsive to said first control signal until hydrocarbon conversion in said riser attains a desired level.

References Cited by the Examiner

UNITED STATES PATENTS

2,982,717 5/61 Waddill ---------- 208—108

OTHER REFERENCES

"Automatic Control of Chemical Petroleum Process," Williams et al., chapter 7, pp. 207 to 270, Gulf Publishing Co., Houston, Tex., 1961.

"The Use of Digital Computers in Petroleum Refining," by Hagler and Shea, vol. V of Advances in Petroleum Chemistry and Refining, pp. 124 to 129, Interscience Publishers, New York.

ALPHONSO D. SULLIVAN, *Primary Examiner.*

UNITED STATES PATENT OFFICE

53

CERTIFICATE OF CORRECTION

Patent No. 3,213,014 October 19, 1965

Robert G. Atkinson et al.

It is hereby certified that error appears in the above numbered patent requiring correction and that the said Letters Patent should read as corrected below.

Column 9, line 31, after "said", first occurrence, insert -- feed --; column 11, line 65, strike out "measuring".

Signed and sealed this 27th day of September 1966.

(SEAL)
Attest:

ERNEST W. SWIDER
Attesting Officer

EDWARD J. BRENNER
Commissioner of Patents