Sept. 26, 1961 R. S. YOPP 3,002,176

MULTIPLE-CONTACT ELECTRICAL CONNECTOR

Filed Nov. 13, 1956 2 Sheets-Sheet 1

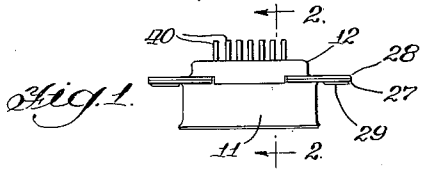

Fig. 1.

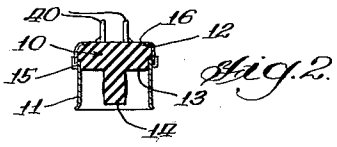

Fig. 2.

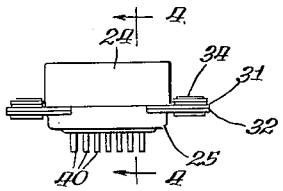

Fig. 3.

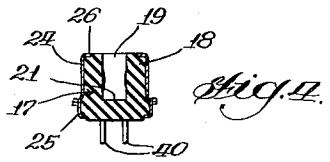

Fig. 4.

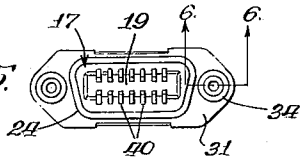

Fig. 5.

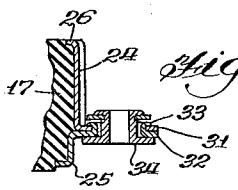

Fig. 6.

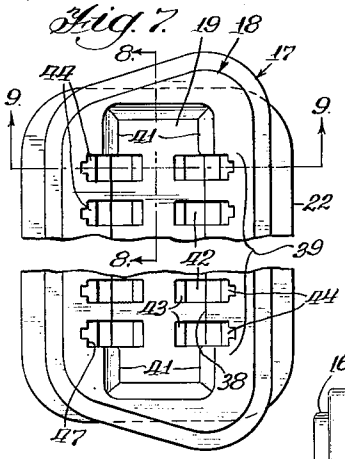

Fig. 7.

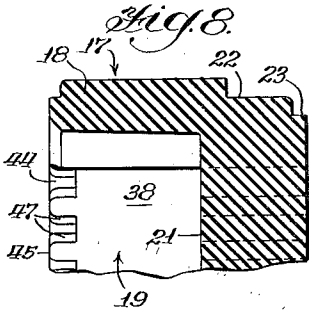

Fig. 8.

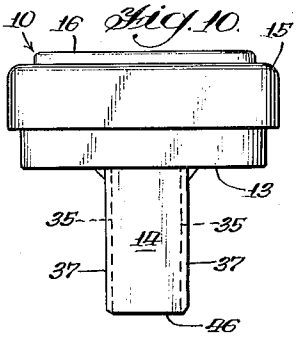

Fig. 10.

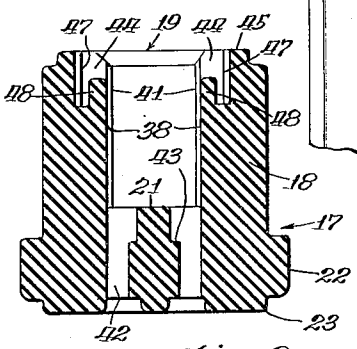

Fig. 9.

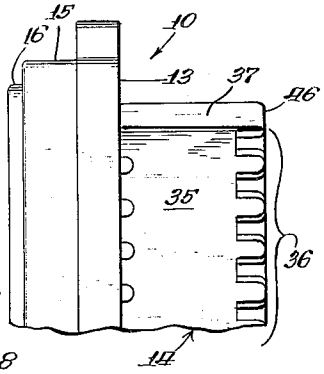

Fig. 12.

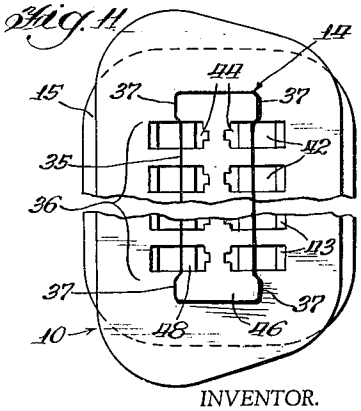

Fig. 11.

INVENTOR.

Robert S. Yopp

BY

L. F. Hammond.

Atty.

MULTIPLE-CONTACT ELECTRICAL CONNECTOR

Filed Nov. 13, 1956 2 Sheets-Sheet 2

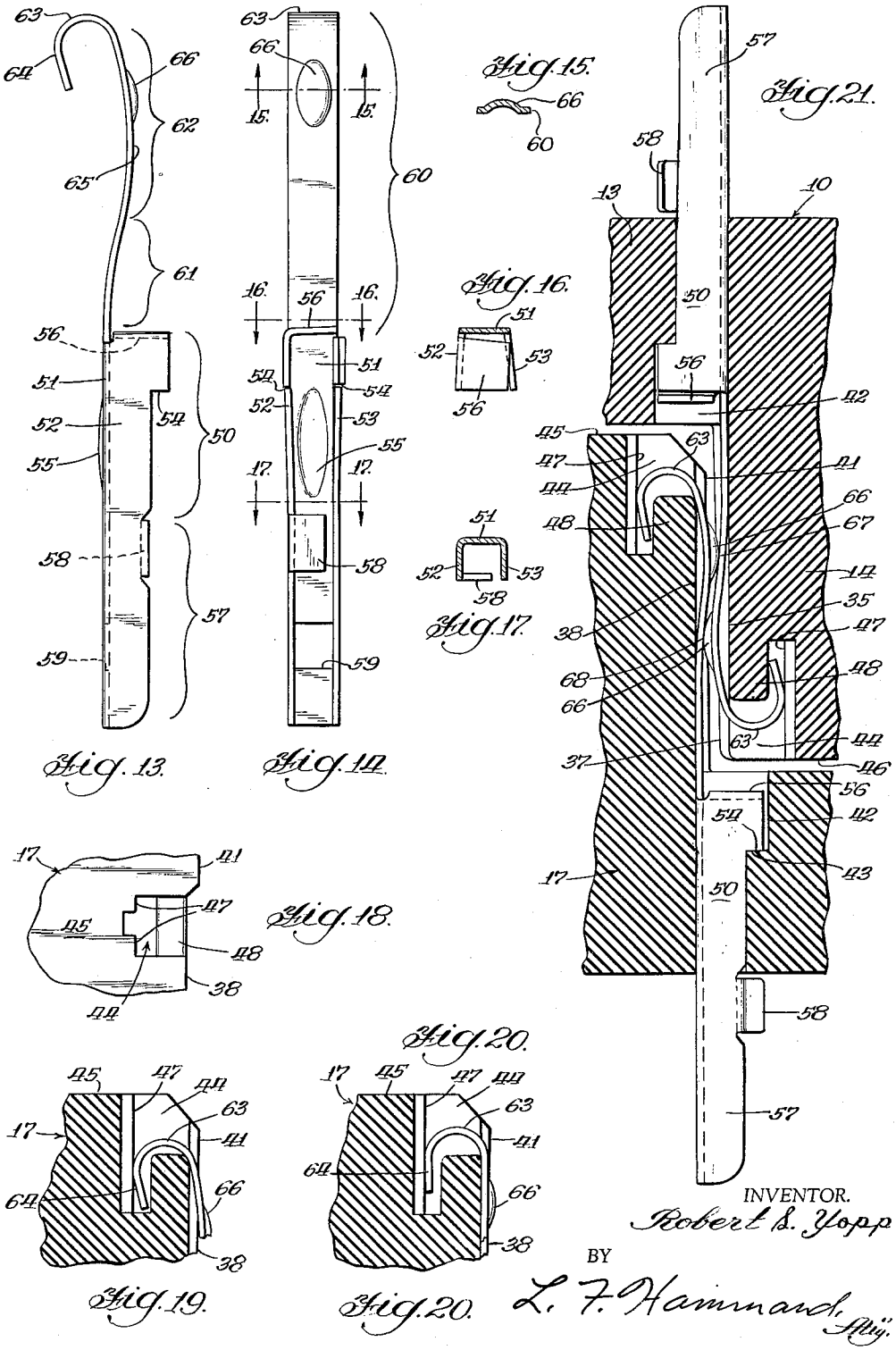

United States Patent Office

3,002,176

Patented Sept. 26, 1961

1

3,002,176

MULTIPLE-CONTACT ELECTRICAL CONNECTOR

Robert S. Yopp, Riverside, Ill., assignor to Amphenol-Borg Electronics Corporation, a corporation of Delaware

Filed Nov. 13, 1956, Ser. No. 621,895
11 Claims. (Cl. 339—176)

This invention relates to electrical connectors and particularly to multiple circuit connectors. It is the general aim of the invention to provide multiple contact connectors of such design and construction that they may be substantially smaller and more compact than prior connectors having equal current carrying capacity, yet to achieve this result without sacrifice of efficiency, ruggedness or dependability of operation.

The form of the present invention chosen for purposes of illustration is a polarized miniature connector having fourteen pairs of mating contacts, all enclosed within paired dielectric inserts each housed within a metallic shell. By the practice of the present invention the overall dimensions of the dielectric of such a connector having each pair of contacts designed to carry a current load of up to five amperes at a voltage rating of 700 volts need be scarcely over an inch in length and less than five-eighths inch in width. The successful accomplishment of miniaturization capable of achieving these phenomenal results quite naturally involves serious problems of mechanical and electrical design, and it is accordingly the primary object of the present invention to reconcile the conflicting mechanical and electrical requirements of the component parts of the connector in a manner to achieve the desired results.

In introduction to the present disclosure it may be explained that while miniaturization has long been recognized as an important desideratum, yet it has always been a more or less universally accepted theory that any reduction in the size of a connector and its contacts would necessarily reflect a similar reduction in its rating, particularly as to current carrying capacity. The present inventor has departed from this long-accepted theory and, by the adoption of new principles of design and construction, has succeeded in producing a miniature connector having current capacity equal to standard size devices of the past (and voltage ratings substantially as great) yet with a weight reduction of as much as 66% and a space saving of up to 79%.

This advance in the art has been accomplished by a new design of both the metallic and dielectric portions of the connector, devised to effectively reconcile the conflicting electrical and mechanical requirements of devices of this general type. More specifically, it is accomplished by a connector of unique mechanical design and novel concept of operation, wherein the proportions and arrangement of the metallic and dielectric parts are such as to make practicable the employment of contacts of metal having a much greater electrical conductivity than heretofore usable in multi-circuit connectors.

It is a specific object of the invention to provide a unique design of mating metallic contacts and dielectric mounting so designed and constructed that the metal portions of the contacts, while yieldable, are so arranged as to be free from any high stress concentration in localized zones of flexing. This avoids fatigue of the metal and prevents premature mechanical failure.

A further object of the invention is to provide a unique combination of high conductivity electrical contact and dielectric supporting means therefor of such design and construction that the yieldable portion of the contact is adequately supported at both ends, with the supporting devices arranged to permit the contact to yield only within closely controlled but adequate limits, and then

2

with smooth transition and progressive support throughout the entire flexing movement.

A further object of the invention is to provide contact and dielectric designs wherein both contacts of each mating pair are yieldable with respect to the other. The contacts may then preferably be identical in construction, and the degree of flexing and yielding required to accomplish dependable engagement and adequate contact pressure without impractical tolerances may be achieved without over-flexing either contact of the pair. This feature also contributes to permitting the employment of contact metal having a greater degree of electrical conductivity but lower spring quality than heretofore regarded as essential.

A further specific object is to provide paired contacts of unique yieldable embossed ribbon-like design, wherein the actual point of engagement between the mating contacts is between a smoothly rounded convexly bulged protuberance on one contact, bearing against a generally flat or slightly curved planar surface on the other. This arrangement provides a minimum voltage drop across the contact pair, at the same time providing effective wiping action to keep the contact surfaces clean and bright. Also, it avoids galling between the contact and affords a smooth "snap in" action, with proper insertion and withdrawal force.

A still further spectific object of the invention is to provide a unique arrangement of mating metallic contact members wherein the path of electrical current flow between the paired contacts is divided between two points of contact, electrically in parallel with each other, with each of said points of contact comprising a point of engagement between a smoothly rounded convex bulge and a relatively flat surface.

A still further object of the present invention is the provision of a unique combination of metallic contacts as indicated above with dielectric mounting structure therefor wherein all parts are so designed that the dielectric may be one piece, integral throughout, with all cores of adequate size and strength for practical mass-production, and without internal cracks, crevices or parting lines through which leakage paths may develop, yet with adequate provision for firm, positive and easy mounting of the metallic contacts in the dielectric.

The foregoing objects are accomplished according to the present teaching by a design of connector wherein the metallic parts of the contact are yieldable within limits, but are backed up by unyielding dielectric portions specifically formed to prevent overflexing, and to distribute the stresses applied to the contacts in a manner to bring about progressive bending of the metallic parts over substantially the entire length of their yieldable portions, rather than permitting a high stress concentration in localized zones.

In the preferred form of the invention illustrated in the drawings,

FIGURE 1 is a side elevational view of a miniature electrical connector plug, the parts being shown the actual size of the commercial embodiment of the invention;

FIGURE 2 is a cross sectional view thereof taken substantially on the plane of the line 2—2 of FIGURE 1;

FIGURE 3 is a side elevational view of a receptacle adapted to receive said plug;

FIGURE 4 is a cross sectional view thereof taken substantially on the plane of the line 4—4 of FIGURE 3;

FIGURE 5 is a face view of said receptacle;

FIGURE 6 is an enlarged detail sectional view of the receptacle mounting means taken substantially on the plane of the line 6—6 of FIGURE 5;

FIGURE 7 is a fragmental face view of the dielectric

insert of the receptacle, the view being four times enlarged to show the details of the shape of its parts;

FIGURES 8 and 9 are transverse and longitudinal sectional views of similar scale taken on the lines 8—8 and 9—9 respectively of FIGURE 7;

FIGURE 10 is an end elevational view of the dielectric insert of the plug of the connector;

FIGURE 11 is a fragmental front face view thereof;

FIGURE 12 is a fragmental side view thereof;

FIGURE 13 is a side elevational view of a metallic micro-ribbon contact as employed therein; the view being enlarged ten times actual size;

FIGURE 14 is a face view of one of the contacts, enlarged to the same scale;

FIGURES 15, 16 and 17 are similarly enlarged detail sectional views taken on the planes of the lines 15—15, 16—16 and 17—17 of FIGURES 13 and 14;

FIGURE 18 is a detail plan view of one of the contact retaining pockets, enlarged ten times;

FIGURES 19 and 20 are similarly enlarged detail sectional views through the contact pockets, showing changed positions of the contacts therein; and

FIGURE 21 is a similarly enlarged fragmental diagrammatic view, showing the flexing of the contacts of the plug and receptacle in engaged position.

The connector consists of a plug and receptacle, shown actual size in FIGURES 1 to 5 inclusive, but with the remaining figures enlarged to show greater detail. The plug (FIGURES 1 and 2) consists of a single integral molded dielectric insert **10**, enclosed within a sheet metal shell comprising a forwardly projecting sleeve **11** and a back cap **12**. The insert **10** is preferably of diallyl phthalate, formed to include a base or bottom portion **13** closely fitted within the sleeve **11**. The dielectric insert has a broad flat tongue **14** centrally positioned on the base **13** and projecting forwardly therefrom, with marginal shoulders **15** and **16** on its back surface interfitting with the back cap **12**.

The receptacle (FIGURES 3, 4 and 5) also includes a single integral insert **17** of the same dielectric material, with a forward portion **18** of generally trapezoidal outline (FIGURE 7) with a deep central longitudinal channel **19** bottomed at **21** and adapted to receive the tongue **14** of the plug. Marginal shoulders **22** and **23** extend around the back of the insert and are enclosed within a sheet metal shell consisting of a forward housing **24** and a metallic back cap **25**. The housing **24** closely surrounds the portion **18** of the dielectric with an inwardly projecting front flange **26** on the housing engaging a marginal shoulder at the forward end of the insert. The back cap **25** encloses the bottom portion of the insert, in closely interfitting relation with the shoulders **22** and **23**.

The metal sleeve **11** and back cap **12** of the plug are each provided with outwardly extending mounting flanges **27** and **28** pierced and eyeleted together at **29** to afford means for mounting the plug. Similarly, the forward housing **24** and back cap **25** of the receptacle have mounting flanges **31** and **32**, also pierced and eyeleted at **33**. In addition, if it is so preferred, they may be provided with loosely fitted bushings **34** in free-floating relationship to the eyelets (FIGURE 6) in order that the receptacle may be afforded enough freedom of movement on its mounting to permit self-alignment of the parts as the plug and receptacle are coupled.

From FIGURES 7 and 11 it will be apparent that the dielectric inserts **10** and **17** of the plug and receptacle are both of somewhat trapezoidal shape, although with rounded corners. The metallic sleeve **11** of the plug and the forward housing **18** of the receptacle are correspondingly shaped, so that the plug and receptacle will fit in telescoping relation, yet will be "keyed" to each other and capable of being coupled to each other in only one position, with the engaging contacts of the connector properly polarized.

As best seen in FIGURES 10, 11 and 12 the central projecting tongue **14** of the plug has its opposite face surfaces **35** perfectly smooth and flat throughout the central zone **36** in which the contacts are to be mounted, but the tongue is provided with end enlargements or slide rails **37** along each of its opposite edges. Similarly, the side walls **38** of the channel **19** of the receptacle (FIGURE 7) are smooth and flat within the contact zone **39**, but provided with guide channels **41** at their ends, to accurately guide the tongue of the plug into proper position as it is inserted within the channel of the receptacle. The bottom portion **13** of the dielectric insert of the plug and bottom **21** of the receptacle are both pierced with a plurality of individual contact mounting cavities **42** for the individual contacts, so that the contacts (generally designated **40**) may be mounted therein in predetermined position with respect to the aforementioned dielectric backing walls.

The plug and receptacle are each provided with two parallel rows of metalic contacts, preferably identical in structure (FIGURES 13–18) but reversely mounted with respect to their face-to-face relationship with each other, and oppositely disposed in end-to-end positioning. To accomplish this, the contacts of the plug are mounted facing outwardly on the exterior walls **35** of the tongue, while the contacts of the receptacle are mounted facing inwardly on the interior walls **38** of the receptacle channel **19**.

In the receptacle, the contact cavities **42** are disposed in two parallel rows along the bottom of the channel **19** (FIGURE 7) with one wall of each of the individual cavities contiguous with and in alignment with one of the walls **38** of the channel (FIGURE 9). The cavities are somewhat larger at the front than at the back wall of the connector to provide an offset shoulder **43** against which a corresponding shoulder of the metallic contact will be fitted. The contact cavities may thus be formed during the molding of the dielectric insert by the provision of appropriate coring pins and it will be apparent that the dielectric material is thus continuous and unbroken between the individual cavities.

As thus far described, it will be clear that the individual cavities **42** provide a convenient means for mounting the shank portions of a multiplicity of contacts **40** in a position whereby the contacts may extend upwardly from their shanks and lie in generally parallel relation inwardly facing each other but disposed along the walls **38** of the channel **19**. It is essential to provide retaining or anchoring means for the forward or leading ends of the metallic contacts, however, and a series of pockets **44** are accordingly provided along the front face surface **45** of the receptacle on each side of the channel **19**. An identical series of pockets **44** is provided along the front face **46** of the tongue **14** of the plug. The pockets **44** are molded into the dielectric as best shown in FIGURES 18, 19 and 20 from which it will be seen that each of the pockets consists of a T-shaped recess substantially the same width as one of the contact cavities **42** and in alignment therewith. The T-shape of the pockets permits the use of stronger and more rigid core pins than would otherwise be usable in the molding operation, yet provides a secondary supporting wall **47** parallel with and partially behind the surface of the wall **38**, with an intermediate barrier **48**.

The details of the metallic contacts **40** are best shown in FIGURES 13 to 17 inclusive, from which it will be apparent that each of the individual contacts consists of a single integral stamping of relatively thin sheet metal. In the preferred embodiment of the invention these contacts are formed of cadmium bronze of .006 inch thickness, with the entire contact gold plated over silver. The cadmium bronze has an electrical conductivity in the range of 80 to 84% of the conductivity of pure copper. This is in sharp contrast to the conductivity of about 18% afforded by conventional Phosphor bronze contact stock, but the present design permits use of this metal notwithstanding its known mechanical limitations.

The contacts 40 are of generally channel shaped conformation throughout their mounting shank and terminal portions, with yieldable ribbon-like blade portions arranged to engage and mate with the similar blade portion of the opposite contact. The contacts are thus formed to include a shank portion 50 of three sided channel shape, having a central longitudinal web 51 and paired side flanges 52 and 53 each having an enlarged abutment shoulder to seat against the shoulders 43 of the contact cavities 42 when the shank of the contact is forced into the cavity. As shown, the longitudinal web 51 of the contact shank is provided with an embossed portion 55. This provides enough resilience that the contact may be pressed into a closely fitting cavity with just enough yieldability to provide a completely firm mounting. In short, it is sufficiently yieldable to compensate for minor dimensional variations in the parts and permit workable manufacturing tolerances. The side flanges 52 and 53 are also formed at a slight angle of divergence with respect to each other (FIGURE 16) and with a slight longitudinal taper (FIGURE 14) so that the shank of the contact becomes firmly wedged in the cavity when inserted therein. It is also preferred practice to provide an overturned tab 56 to close the forward end of the shank of each contact, in order that the connector may be sealed with plastic insulating compound without permitting the sealing material to flow into the interior of the connector.

The terminal portion 57 of the contact is essentially a continuation of the shank portion 50, except that it is provided with a locking tab 58 on the side flange 52 so that the locking tab may be bent outwardly after the contacts are inserted into the dielectric to hold the individual contacts against displacement. Also, the longitudinal central wall of the terminal portion is preferably cut away at 59 to provide more convenient access for soldering electrical conductors within the solder pockets existing between the side flanges 52 and 53.

The blade portion 60 of the contact is a single narrow ribbon of the sheet metal stock, precisely formed, however, to include a root portion 61, a convex face portion 62 and a return or horseshoe bend 63 terminating in a rocker end 64. It is important that the central web 51 of the shank extend from the root portion 61 of the blade, and that the root portion be curved on a relatively wide radius, since any sharp angles or bends in the yieldable parts tend to cause concentration of stresses which may lead to ultimate mechanical failure. Accordingly, the root portion 61 is preferably formed with a radius of curvature equal to but opposite to the curvature of the convex face 62. In the preferred practice of the invention, both of these surfaces have a radius of .300 inch.

The leading portion of the convex face 62 (that is, the portion forward to its center point 65) is also provided with a smoothly rounded convex bulge or protuberance 66 embossed in the metal as best shown in FIGURE 15. The extreme leading end of the blade is brought back upon itself in a horseshoe bend as indicated at 63, but it is to be noted that this is not such a sharp bend as to either weaken the metal in the course of the forming process or to cause a concentration of stress during use of the connector, since the radius of the bend 63 is at least four times the thickness of the metal. Also, the arrangement is such that this position of the contact does not flex appreciably in ordinary operation. Instead, it rocks or slides on the rocker portion 64 as best shown in FIGURES 19 and 20. In these figures it will be seen that, in its normal unflexed position, the contact ribbon assumes a curve spaced slightly outwardly from the wall 38, with the horseshoe bend 63 received entirely within the pocket 44 and with the sliding rocker 64 in loose rolling contact with the secondary wall 47 of the pocket. When the connector is coupled and the contacts engage each other along their face portions 62 the entire ribbon 60 is flexed inwardly toward the dielectric wall, but the flexing is limited by the rigid nature of the wall and even if the ribbon is flexed to its extreme limit it will merely lie in generally flat position against the wall (FIGURE 20) without having exceeded the elastic limit of the metal and without taking a permanent set. Similarly, the horseshoe bend 63 of the ribbon merely slides and rolls with respect to the secondary wall 47, since it is dimensioned to be received entirely within the pocket 44 without flexing.

The details of the manner in which the opposite identical contacts of the plug and receptacle engage each other are best shown in FIGURE 21. From this illustration it will be seen that the coupling of the plug and receptacle brings the wall 35 of the tongue and wall 38 of the receptacle into generally parallel closely spaced relation, with the interengaging blade portions of the contacts in face-to-face engagement between these walls. As the plug and receptacle are coupled the bulged protuberance on the leading portion of each contact blade overrides the corresponding bulge on the other as the contacts reach full and mated position, so that the convex bulge on each of the contacts is in surface-to-surface engagement with a flat or slightly curved surface of the face 62 of the opposite contact. It follows that there are two points of electrical contact (designated 67 and 68 in FIGURE 21) between each pair of contacts, and that these are in parallel electrically. In addition to providing parallel current paths between the two contacts, the conformation of the ribbon-like blades has been found to effectively resist scratching or galling of the contact faces even after repeated coupling and uncoupling. The overriding of the bulged protuberances of the paired contacts also serves to give the connector a smooth yet positive "snap action," holding the opposite plug and receptacle firmly together when coupled, yet permitting their separation by application of only moderate manual force.

From the foregoing it will be evident that the present invention accomplishes its objectives by the provision of a connector dielectric and metallic contact of unique mechanical and electrical design, so constructed as to permit the use of high conductivity metals heretofore regarded as impractical for such uses. Nevertheless, the inherent design and construction of the contacts of this disclosure is such that, when mounted in the dielectric inserts as shown, they have adequate flexing and sufficient yieldability to assure positive engagement with adequate contact force. They are not subject to overflexing such as would impart a permanent set to the metal, and they operate without concentration of stress as in localized zones of the metal such as might cause eventual crystallization and metal fatigue, and possible mechanical failure. It is to be noted, for example, that the root portion 61 of the contact ribbon is concave on its face side and thus has its rearmost surface tangent with and flat against the dielectric backing wall. Thus when the contacts are in disengaged position the spring blade is supported at a position closely adjacent the shank 50 but as the contacts engage and the blade portions thereof are flexed, the curvature of the root portion 61 causes somewhat of a rolling action whereby the point of support of the contact moves forwardly along the dielectric wall 38, allowing the contact to flex within a limited and predetermined degree but distributing the flexing throughout the blade of the contact and preventing any concentration of stress in any localized zone. It is also to be noted that while some small degree of flexing may occur within the horseshoe bend 63 of the contact, yet this portion acts primarily as a shiftable anchor in rolling and sliding engagement with the secondary wall 47 of the pocket 44 of the dielectric. Each contact may flex to substantial flat shape without damage. Any flexing beyond permissible limits is prevented by the continuous solid and rigid dielectric wall adjacent the contact blade.

It is also to be noted that while each of the contacts is identical in shape, configuration and construction, yet when the plug and receptacle are coupled in mating rela-

tionship (FIGURE 21) the convexly rounded embossment of each contact in engagement with the relatively flat portion of the ribbon on its mating contact will create two parallel electric paths between the contact of the plug and the contact of the receptacle. Obviously this reduces the voltage drop between the two contact members to a lower reading than would be noted if only one current path existed. In addition, it will be clear that the parallel points of contact provide an added safety factor against faulty connection due to corrosion or unclean contacting surfaces, thus further contributing to the reliability of the connector as a whole. Also, of course, the double contact arrangement insures positive electrical engagement between the parts without unnecessarily exacting manufacturing tolerances, notwithstanding the small physical dimensions of the metallic pieces involved.

The result of all of the above is a marked improvement in performance, permitting the construction of a connector and its component parts of a small fraction of the physical size heretofore required for the same current capacity.

Having thus described my invention, what I claim as new and desire to secure by United States Letters Patent is:

1. In an electrical connector, in combination, a pair of insulating contact mounts each consisting of a single integral molding of rigid dielectric material; one of said moldings having a broad, flat tongue projecting therefrom and fitting within a longitudinal channel in the other of said moldings; with both said tongue and said channel including at least one relatively broad, smooth, flat, rigid dielectric backing wall and with at least one pair of side rails on one of said moldings engaging guide portions on the other molding and holding said backing walls in closely spaced generally parallel relation with a corresponding wall on the other; with a plurality of conductive contacts carried by each of said moldings and each comprising a relatively rigid mounting shank affixed in the molding with a thin, narrow, yieldable blade of high-conductivity metal integral with said mounting shank and extending therefrom in a free-standing curved bow disposed across one of the aforementioned dielectric backing walls, with the end of the contact blade adjacent the mounting shank of each contact lying against the adjacent backing wall and curving gradually outwardly therefrom in a concave root portion extending to a reversely curved convex face segment terminating in a horseshoe bend having a slidable rocker end bearing against a support at the back of a reversely oriented pocket behind the said one of the aforementioned dielectric backing walls; the convex face segment of each contact including a smoothly rounded bulged protuberance on its leading portion and a generally flat planar portion adjacent the root thereof, with the bulged protuberance of each of said contacts in surface engagement with the planar surface of another when fully engaged and with each of said contacts identical to the other and oppositely disposed with respect thereto.

2. An electrical connector according to claim 1 wherein the curvature of root portion of the contact is no more abrupt than the curvature of convex face segment thereof.

3. In an electrical connector, in combination, a pair of insulating contact mounts each consisting of a single integral molding of rigid dielectric material; one of said moldings having a broad, flat tongue projecting therefrom and fitting within a longitudinal channel in the other of said moldings; with both said tongue and said channel including at least one relatively broad, smooth, flat, rigid dielectric backing wall and with at least one pair of slide rails on one of said moldings engaging guide portions on the other molding and holding said backing walls in closely spaced generally parallel relation with a corresponding wall on the other; with a plurality of conductive contacts carried by each of said moldings and each comprising a relatively rigid mounting shank affixed in the molding with a thin, narrow, yieldable blade of high-conductivity metal integral with said mounting shank and extending therefrom in a free-standing curved bow disposed across one of the afore-mentioned dielectric backing walls, with the end of the contact blade adjacent the mounting shank of each contact lying against the adjacent backing wall and curving gradually outwardly therefrom in a concave root portion extending to a reversely curved convex face segment terminating in a horseshoe bend having a slidable rocker end bearing against a support at the back of a reversely oriented pocket behind the said one of the aforementioned dielectric backing walls; the convex face segment of each contact including a smoothly rounded bulged protuberance on its leading portion and a generally flat planar portion adjacent the root thereof, with the bulged protuberance of each of said contacts in surface engagement with the planar surface of another when fully engaged.

4. In an electrical connector, in combination, a pair of insulating contact mounts each consisting of a single integral molding of rigid dielectric material; one of said moldings having a broad, flat tongue projecting therefrom and fitting within a longitudinal channel in the other of said moldings; with both said tongue and said channel including at least one relatively broad, smooth, flat, rigid dielectric backing wall and with at least one pair of slide rails on one of said moldings engaging guide portions on the other molding and holding said backing walls in closely spaced generally parallel relation with a corresponding wall on the other; with a plurality of conductive contacts carried by each of said moldings and each comprising a relatively rigid mounting shank affixed in the molding with a thin, narrow, yieldable blade of high-conductivity metal integral with said mounting shank and extending therefrom in a free-standing curved bow disposed across one of the afore-mentioned dielectric backing walls, with the end of the contact blade adjacent the mounting shank of each contact lying against the adjacent backing wall and curving gradually outwardly therefrom in a concave root portion extending to a reversely curved convex face segment terminating in a horseshoe bend having a slidable rocker end bearing against a support at the back of a reversely oriented pocket behind the said one of the aforementioned dielectric backing walls.

5. In an electrical connector, in combination, a pair of insulating contact mounts each consisting of a molding of rigid dielectric material; one of said moldings having a broad, flat tongue projecting therefrom and fitting within a longitudinal channel in the other of said moldings; with both said tongue and said channel including at least one relatively broad, smooth, flat, rigid dielectric backing wall; with a plurality of conductive contacts carried by each of said moldings and each comprising a relatively rigid mounting shank affixed in the molding with a thin, narrow, yieldable blade of high-conductivity metal integral with said mounting shank and extending therefrom in a free-standing curved bow disposed across one of the aforementioned dielectric backing walls, with the end of the contact blade adjacent the mounting shank of each contact lying against the adjacent backing wall and curving gradually outwardly therefrom in a concave root portion extending to a reversely curved convex face segment; the convex face segment of each contact including a smoothly rounded bulged protuberance on its leading portion and a generally flat planar portion adjacent the root thereof, with the bulged protuberance of each of said contacts in surface engagement with the planar surface of another and with each of said contacts identical to the other and oppositely disposed with respect thereto.

6. In an electrical connector, in combination, a pair of insulating contact mounts each consisting of a single integral molding of rigid dielectric material including at least one relatively rigid dielectric backing wall, with

slide means for holding said backing wall of each molding in closely spaced relation with a corresponding wall on the other; with a plurality of conductive contacts carried by said moldings; each contact consisting of a relatively rigid mounting shank with a thin, narrow, yieldable blade of high-conductivity metal extending therefrom in a free-standing curved bow disposed across one of the aforementioned dielectric backing walls, with the end of the contact blade adjacent the mounting shank of each contact lying against the adjacent backing wall and curving gradually outwardly therefrom in a concave root portion extending to a reversely curved convex face segment terminating in a horseshoe bend having a slidable rocker end disposed in a pocket behind the said one of the aforementioned dielectric backing walls; the convex face segment of each contact including a smoothly rounded bulged protuberance on its leading portion and a generally flat planar portion adjacent the root thereof, with the bulged protuberance of each of said contacts in surface engagement with the planar surface of another and with each of said contacts identical to the other and oppositely disposed with respect thereto.

7. An electrical connector according to claim 6 wherein the curvature of root portion of the contact is no more abrupt than the curvature of convex face segment thereof.

8. In an electrical connector, in combination, a pair of insulating contact mounts each consisting of a single integral molding of rigid dielectric material including at least one relatively rigid dielectric backing wall, with slide means for holding said backing wall of each molding in closely spaced relation with a corresponding wall on the other; with a plurality of conductive contacts carried by said moldings; each contact consisting of a relatively rigid mounting shank with a thin, narrow yieldable blade of high-conductivity metal extending therefrom in a free-standing curved bow disposed across one of the aforementioned dielectric backing walls, with the end of the contact blade adjacent the mounting shank of each contact lying against the adjacent backing wall and curving gradually outwardly therefrom in a concave root portion extending to a reversely curved convex face segment terminating in a horseshoe bend having a slidable rocker end disposed in a pocket behind the said one of the aforementioned dielectric backing walls; the convex face segment of each contact including a smoothly rounded bulged protuberance on its leading portion and a generally flat planar portion adjacent the root thereof, with the bulged protuberance of each of said contacts in surface engagement with the planar surface of another when fully engaged.

9. In an electrical connector, in combination, a pair of insulating contact mounts each consisting of a single integral molding of rigid dielectric material including at least one relatively rigid dielectric backing wall, with slide means for holding said backing wall of each molding in closely spaced relation with a corresponding wall on the other; with a plurality of conductive contacts carried by said moldings; each contact consisting of a relatively rigid mounting shank with a thin, narrow, yieldable blade of high-conductivity metal extending therefrom in a free-standing curved bow disposed across one of the aforementioned dielectric backing walls, with the end of the contact blade adjacent the mounting shank of each contact lying against the adjacent backing wall and curving gradually outwardly therefrom in a concave root portion extending to a reversely curved convex face segment; the convex face segment of each contact including a smoothly rounded bulged protuberance on its leading portion and a generally flat planar portion adjacent the root thereof, with the bulged protuberance of each of said contacts in surface engagement with the planar surface of another when fully engaged and with each of said contacts identical to the other and oppositely disposed with respect thereto.

10. In an electrical connector, in combination, an insulating contact mount consisting of a single, integral dielectric molding having a bottom portion and at least one relatively broad, smooth, flat rigid dielectric backing wall perpendicular to the bottom portion, with a plurality of high conductivity cadmium bronze metallic contacts aligned against said backing wall; each of said contacts comprising a relatively rigid mounting shank of channel shaped conformation fitted within a cavity extending through the bottom of the molding, with a terminal portion of channel shaped form projecting therefrom; each of said contacts having a thin, narrow, yieldable blade integral with said mounting shank and extending therefrom in a free-standing curved bow disposed across the aforementioned dielectric backing wall, with the end of the bow adjacent to the mounting shank lying flush against the backing wall and with said blade curving gradually outwardly therefrom in a concave root portion extending to a reversely curved convex face segment; terminating in a horeshoe bend having a slidable rocker end supporting the leading end of the blade engaging an anchor pocket disposed behind the aforementioned dielectric backing wall; the curvature of the root portion of the contact blade being no more abrupt than the curvature of the convex face thereof, and the horseshoe bend of the blade being of dimensions to be received within the anchor pocket of the dielectric without substantial flexing.

11. In an electrical connector of the type having a receptacle assembly with a plug assembly received therein, the combination of a plug assembly comprising a single, integral dielectric member having an elongated base with an elongated tongue centrally disposed thereon and projecting therefrom; said tongue being of broad, thin, flat form and having a pair of smooth, outwardly facing, opposite side walls terminating in a leading edge spaced forwardly of the base and generally parallel therewith; said tongue portion having a plurality of individual contact pockets spaced in parallel rows along said leading edge and adjacent the side walls thereof, and the base having a plurality of contact mounting apertures therethrough, each of said apertures being in substantial alignment with the surface of one of said side walls and spaced therealong; with a plurality of conductive metallic contacts each having a relatively rigid shank portion of three sided channel formation mounted in one of the aforementioned apertures in the base, with a relatively narrow thin flexible blade projecting outwardly along a side wall of the tongue and having a horeshoe end seated within one of the aforementioned contact pockets on the leading edge of said tongue; with the blade of each of the contacts curved outwardly from the adjacent side walls of the tongue in the form of a yieldable free-standing bow having each end supported and restrained against inward movement and having a convex bulge on the leading portion of said bow; the receptacle assembly comprising a single, integral dielectric housing having a bottom and a pair of side walls on opposite sides of a central elongated channel dimensioned and proportioned to receive the tongue of the aforementioned plug assembly, said channel having a pair of opposed inwardly facing side walls extending from the mouth of said channel to the bottom of the receptacle, with a plurality of individual contact pockets spaced apart from each other in parallel rows along the opposite edges of the mouth of said channel adjacent each of said side walls, a plurality of contact-mounting apertures extending through the bottom of the dielectric housing in spaced relationship along the opposite inwardly facing side walls of the channel therein, and a plurality of conductive metallic contacts each having a relatively rigid shank portion of three sided channel formation extending through and secured in one of the apertures aforesaid, with a relatively narrow thin flexible blade extending from said shank portion to a horeshoe end secured within one of the aforementioned contact pockets at the mouth of the chan-

nel; with the blade portions of each of said contacts curved outwardly away from the wall surface of the receptacle in the form of a yieldable free-standing bow oppositely disposed with respect to the bow portions of the plug contacts and in yieldable engagement therewith; with a convex bulge on the leading portion of the bow of each of said receptacle contacts overriding and engaging the aforementioned bulge on the corresponding contact of the plug and with said contacts of the aforementioned receptacle and plug being of identical size, shape and construction whereby the bow portions of both sets of contacts yield to each other as the receptacle and plug are coupled.

References Cited in the file of this patent

UNITED STATES PATENTS

2,113,328 Makenny ---------- Apr. 5, 1938

2,205,186 Andre ---------- June 18, 1940
2,699,534 Klostermann ---------- Jan. 11, 1955
2,742,593 Voss ---------- Apr. 17, 1956
2,875,425 Gilbert ---------- Feb. 24, 1959
2,899,669 Johanson ---------- Aug. 11, 1959

FOREIGN PATENTS

1,042,463 France ---------- June 3, 1953

OTHER REFERENCES

Amphenol Engineering News, vol. 7, No. 6, November 1954, pages 261, 264, 265.