# United States Patent [19]

Lynn

[11] 3,749,414

[45] July 31, 1973


[54] **REFUSE CAN HOLDER**


[76] Inventor: **James D. Lynn**, 2106 Maysville Rd., Huntsville, Ala. 35811



[22] Filed: **Jan. 10, 1972**

[21] Appl. No.: **216,580**

[52] **U.S. Cl.** ..... **280/47.19**, 211/83, 248/147, 248/DIG. 7

[51] **Int. Cl.** ..... **B62b 1/22**

[58] **Field of Search** ..... 280/47.13, 47.19, 280/47.24, 47.26, 47.35, 79.2; 211/71, 83; 248/147, DIG. 7; 220/85 H



[56] **References Cited**

UNITED STATES PATENTS

| | | | |
|---|---|---|---|
| 3,111,333 | 11/1963 | Marini et al. | 280/47.19 |
| 2,802,673 | 8/1957 | Hazlett | 280/47.24 |
| 3,028,015 | 4/1962 | Williams | 211/83 |
| 2,726,833 | 12/1955 | Burgh | 248/147 |
| 3,292,795 | 12/1966 | Chappell | 211/71 |
| 3,399,903 | 9/1968 | Bailey | 280/47.26 X |
| 3,558,088 | 1/1971 | Sherley | 248/147 |
| 3,379,451 | 4/1968 | Marini et al. | 280/47.19 |



*Primary Examiner*—Benjamin Hersh
*Assistant Examiner*—Leslie J. Paperner
*Attorney*—C. A. Phillips



[57] **ABSTRACT**

A refuse can holder of generally wheelbarrow-like construction and having a lid retainer assembly for applying and removing lids and holding the lids in a lowered position to the side of the frame of the holder.


**2 Claims, 12 Drawing Figures**

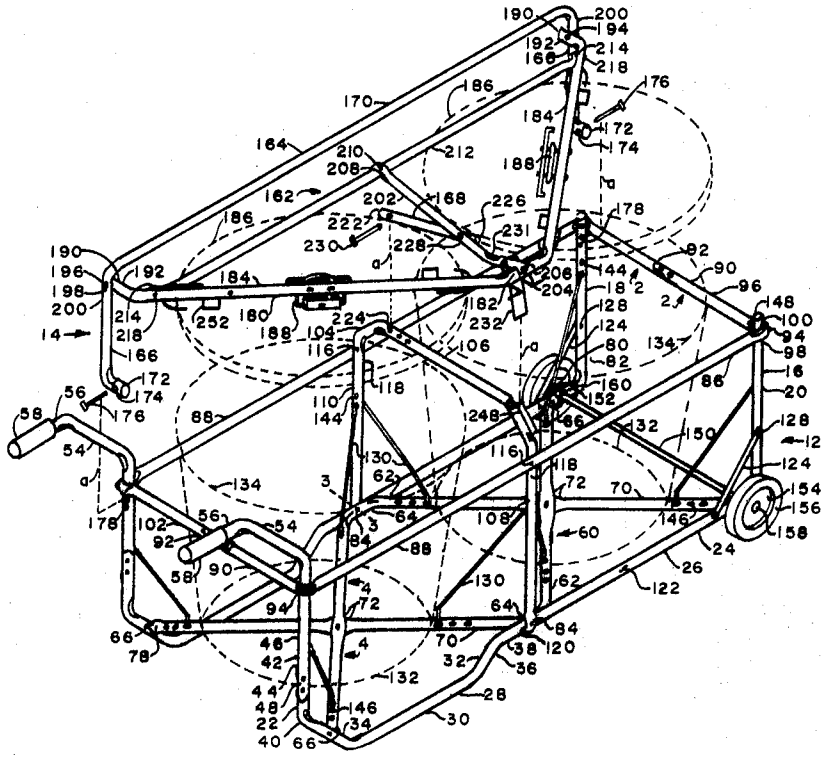

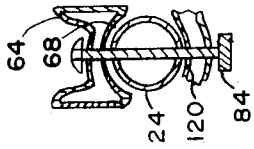

FIG. 3

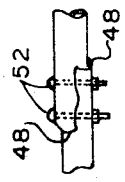

FIG. 2

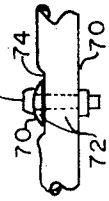

FIG. 4

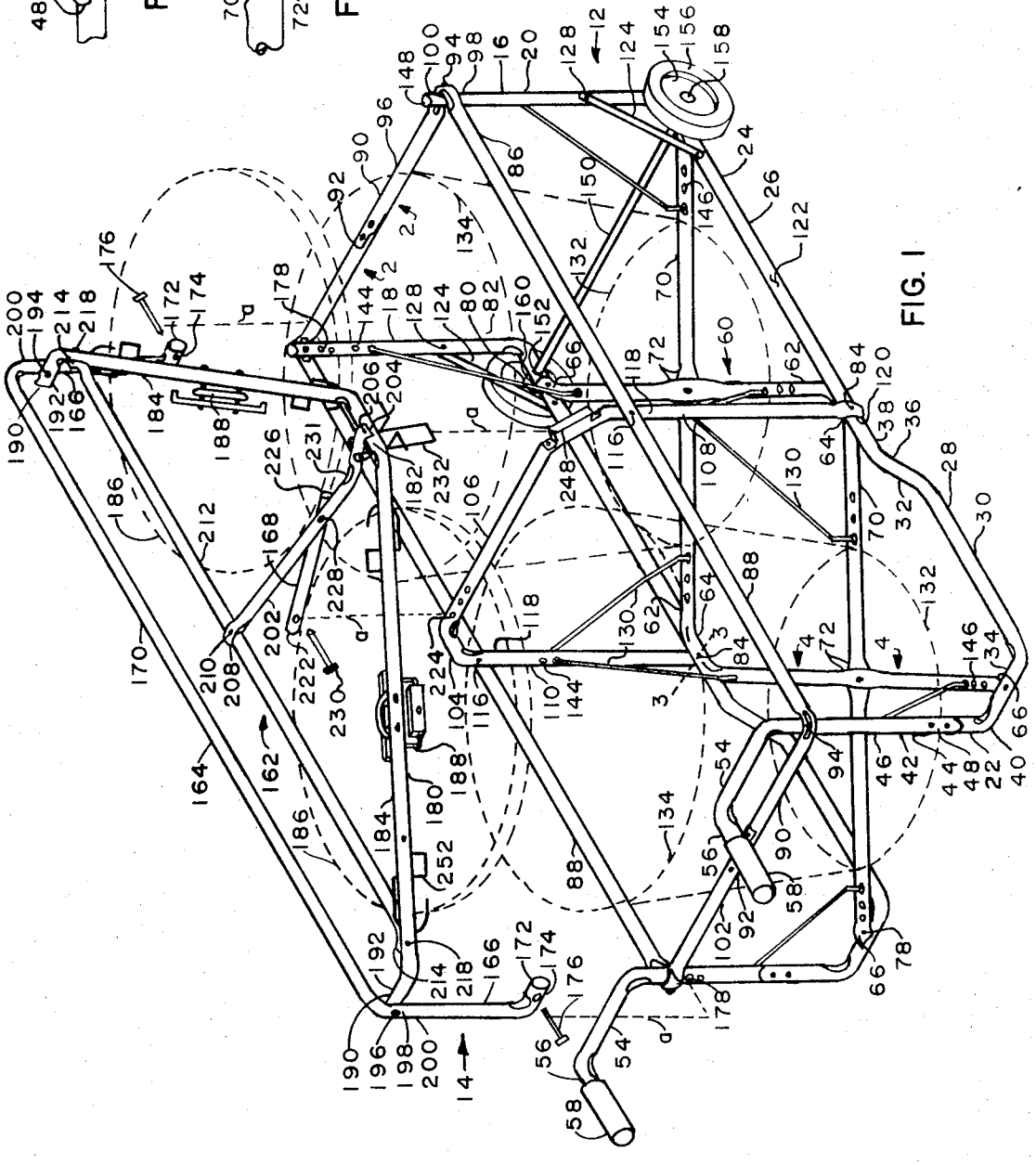

FIG. 1

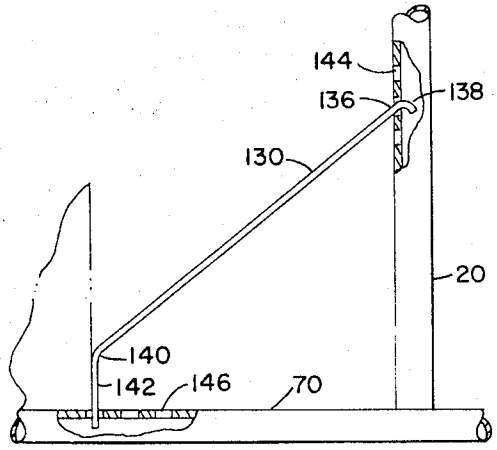


FIG. 5

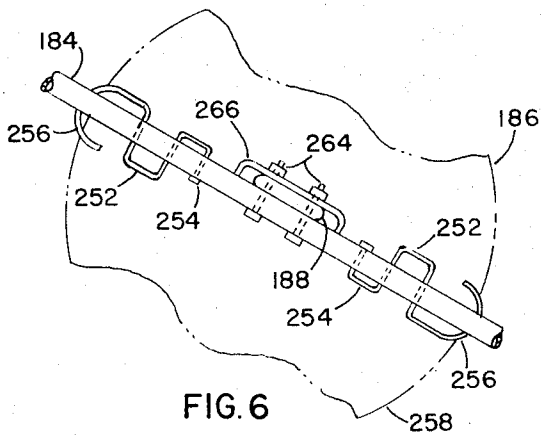


FIG. 6

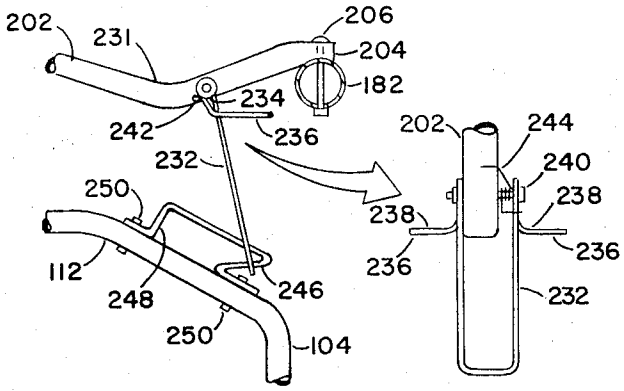


FIG. 7A

FIG. 7

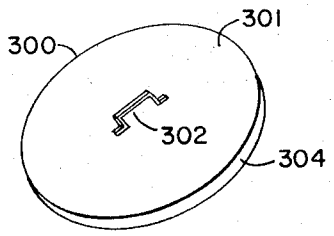


FIG. 9

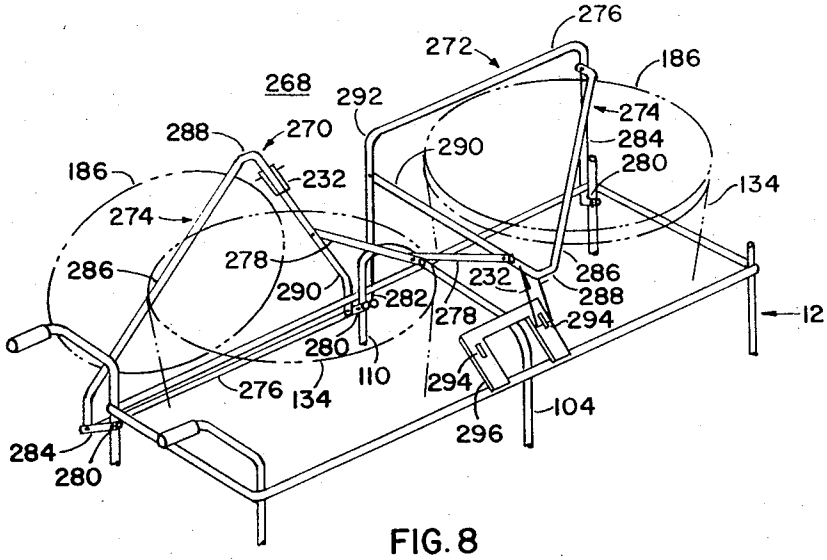


FIG. 8

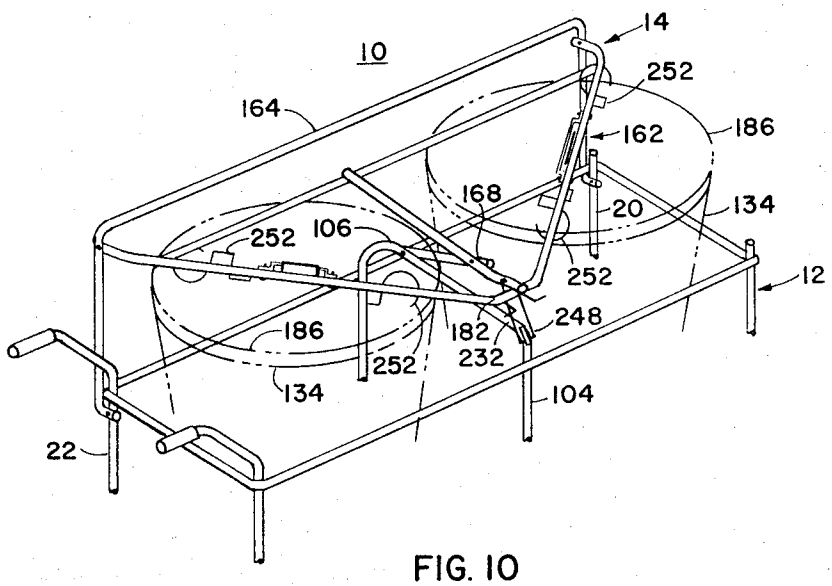
10
14
252
164
162
186
168
20
134
252
106
252
12
248
186
182
232
252
134
104
22

FIG. 10

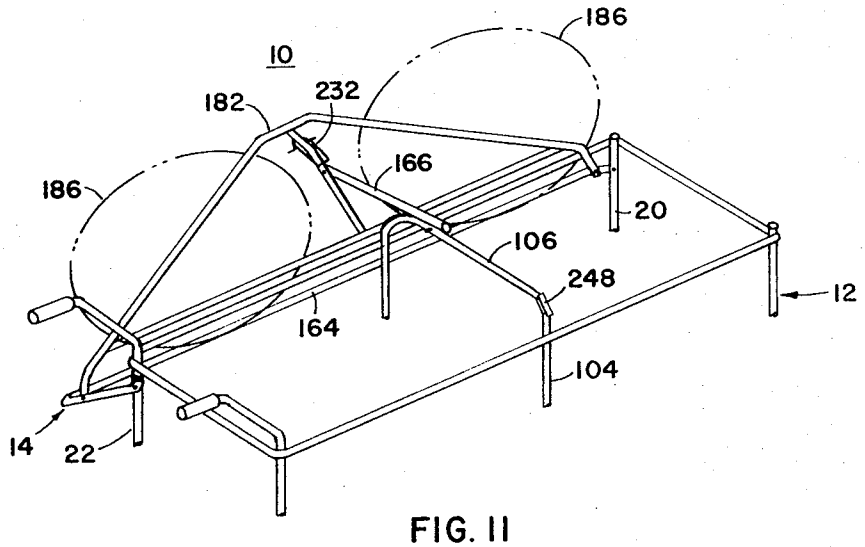
186
10
232
182
166
186
20
106
248
12
164
104
14
22

FIG. 11

# REFUSE CAN HOLDER

## BACKGROUND OF THE INVENTION

This invention relates to utility carts and more particularly to an improved portable refuse can holder.

## DESCRIPTION OF THE PRIOR ART

To facilitate the removal of trash and garbage from residential areas, many cities today require that trash containers be placed near the street during certain designated times of pickup. For this reason it is convenient for the home owner to have some type of can holder or cart for transporting these containers or cans from the house to the street and a number of such carts or can holders have been developed and are presently being marketed. However, the Applicant has found that many of them are incapable of holding up under typical usage for any significant period of time.

The basic problem appears to be that of achieving a stable construction of the frame of the cart. One approach which solves the problem is to make the frame of steel, but steel carts appear to be too heavy for general acceptance and most carts are now constructed of tubular aluminum. While it would seem that such construction would be relatively simple, and it is acknowledged that literally millions of tubular aluminum trash carts have been constructed and sold, they generally lack the structural integrity to endure for any significant periods of time. Because of this, and the aforesaid difficulties with steel carts, many department stores and other merchandising outlets have discontinued the sale of refuse carts.

A second source of dissatisfaction with existing carts is that they fail to provide, or adequately and conveniently provide means for the retention of can lids. Considering this problem, an examination of the prior art reveals several configurations of lid holders. In one such device individually hinged arms, which support lids, swing upward and thus cause the lids to be held in a substantially vertical position. This configuration often results in the lids being caught in the wind which may blow the lids shut or turn over the cart. Further such positioning of lids makes it inconvenient to dump waste into the cans or to remove cans from the cart. Another type of lid retainer assembly includes two interconnected lid clamping bars, transversely hinged, which extend centrally across the lids and are provided with lid contacting rings which press down against the central region of of the lids. The clamping bars are buttoned down firmly by means of a hasp or other latching means. Can positioning rings are provided near the bottom periphery of the cans so that the cans are prevented from being shifted while being transported. However, since the lids are not attached to the cart assembly, once the lids have been removed, it is likely that they can become separated from the cans and lost. Further, since it is possible that the upper rims of the cans may be deformed in handling, if one lid fails to seat properly over the can rim the other lid will most likely be loosely held on.

The inventor has determined that, in general, lids should not be clamped on by pressure applied to the center of can lids, since they too are rather easily deformed.

## SUMMARY OF THE INVENTION

Accordingly it is an object of this invention to provide an improved refuse can holder, or garbage cart, which is constructed of aluminum tubing and thus is of light weight but which tests indicate will meet the most rugged usage over long periods of use without failure.

A second object of this invention is to provide a lid removal and application assembly which will positively remove and apply lids, and when lids are removed, position the lids down to the side, out of the way and out of the wind. This makes can removal easier and prevents the cart from being blown over when lids are removed and thus the unloaded cart particularly vulnerable to being turned over by wind catching the face of lids.

In accordance with one aspect of the invention a cart is constructed of a generally wheelbarrow configuration and of tubular aluminum. The longer sides are constructed of U-shaped tubular members. The bottom is constructed of two V-shaped tubular members which cross and the crossing point secured together by flattening only the adjacent surfaces and leaving the other surfaces tubular. The V-shaped members are attached to the bottom longitudinal members of the U-shaped sides and the attaching surfaces are constricted to a very strong I-beam configuration modified to the extent that one side surface conforms to the tubular surface of the U-shaped side members which are undistorted. By the combination of these connections the V-shaped members provide an extremely strong vertical weight carrying ability, enabling several hundred pounds to be supported without significant distortion of the cart. A horizontal rectangular frame is attached to the upright portions of the U-shaped side members and in accordance with a particular feature of the invention it extends around the outside of the U-shaped members and is constricted to conform to the tubular contour of these members. Bolts are applied along an axis which is essentially through a center of an upstanding U-shaped side member and along an axis of 45° with respect to either a side or a front member of the rectangular frame.

A lid retainer or holder as contemplated by the present invention would be constructed as follows: a lid supporting frame or lid mounting means is pivotally supported on the fixed frame of a cart and a lid operating member is in turn supported on the lid supporting frame. The lid operating member is adapted to extend across the diameter of a can positioned in the cart and at a level substantially above the pivotal connection of the mounting means. The lid of a can is pivotally fastened to the lid operating member. Lid closing members are mounted on the lid operating member and are positioned above opposite edges of the lid. Springs apply pressure between the lid operating member and a lid whereby as a lid perating member is moved with a retained lid toward the top of a refuse can the rear of the can is first engaged by the rear lip of the lid, moving the can forward until retained, and thereafter the lid is moved downward into a closed position on the can.

## BRIEF DESCRIPTION OF THE DRAWINGS

FIG. 1 is a pictorial view of a refuse can holder with its lid holder disconnected and raised above the frame of the can holder.

FIG. 2 is a detail of construction as seen along lines 2—2 of FIG. 1.

FIG. 3 is a detail of construction as seen along lines 3—3 of FIG. 1.

FIG. 4 is a detail of construction as seen along lines 4—4 of FIG. 1.

FIG. 5 is a side view of a can centering brace.

FIG. 6 is a top view of a lid attachment assembly.

FIGS. 7 and 7*a* are front and side views, respectively, of a portion of a locking device for locking the lid retainer assembly and thus can lids in a closed position.

FIG. 8 is a pictorial view illustrating a modified form of the invention in which there are separate lid holders for each can.

FIG. 9 is a perspective view of an alternate form of lid cover.

FIGS. 10 and 11 are partial perspective views of the can holder shown in FIG. 1 illustrating lids positioned in closed and open positions, respectively.

## DESCRIPTION OF THE PREFERRED EMBODIMENT

Referring initially to FIG. 1, there is shown a cart or trash can holder **10**, preferably constructed of light weight tubing elements, detachably interconnected for easy assembly and disassembly, and which comprises two functional assemblies, cart assembly **12** and lid retainer assembly **14**. Lid retainer assembly **14** is disconnected from cart assembly **12** and interconnection points are indicated by dotted lines a. Cart assembly **12** comprises two entirely similar spaced side supporting frames **16** and **18**, each of which is generally "U" shaped and includes front and rear vertically disposed support members **20** and **22**, respectively, interconnected by longitudinal support member **24**. Longitudinal support member **24** comprises a substantially horizontal front portion **26** which extends rearward to join rear cart support foot member **28**.

Support member **28** includes elongated horizontal ground contacting portion **30** having upwardly inclined diverging end elements **32** and **34**. Upper end **36** of front element **32** connects with rear end **38** of front horizontal portion **26**. Rearwardly inclined element **34** connects with aft vertical support member **22** at a point **40** above the plane of horizontal front portion **26**. Each of side support frames **16** and **18** is provided with a rear vertical extension member **42** detachably secured to upper end **44** of rear vertical support member **22**. Extension member **42** includes an elongated vertical section **46**, the lower end of which is formed into a concave overlapping receptacle **48** (FIG. 2) which tortionally engages a similar overlapping receptacle **48** of vertical member **22**, and is secured thereto by bolts **52**. Upper portion **54** of extension member **42** is configured into a rearwardly extending handle segment **56**, preferably provided with a conventional handle bar grip **58**.

A can supporting base assembly **60** is detachably mounted to and between side frames **16** and **18** parallel to horizontal front member **26** of side frames **16** and **18**. Base assembly **60** consists of two similar V-shaped members **62**. The vertex **64** and each free end **66** of these members **62** are formed with a right angle bend, as shown in FIG. 3, resulting in a mounting cradle **68** which alleviates torsional movement of side frames **16** and **18** when assembled thereto. Arms **70** of each of V members **62** have midsections **72** reduced in one cross sectional dimension and are formed with flattened area **74** (FIG. 4), which mates with a like area of a crossing arm **70**, when in an assembled relationship thereto, to form a double "X" supporting base. Crossing midsections **72** are securely joined by bolt **76**. The concave free ends **66** of each of base members **62** are detachably secured by bolts **78** to opposing side frames **16** and **18**. One end **66** is secured at a point **80** along horizontal section **26** near front end **82** of cart assembly **12**. The opposite end **66** is secured, at an equal elevation, to rear inclined portion **34** of side frames **16** and **18**. The vertex **64** of each of base members **62** is centrally secured by bolt **84** to horizontal frame member **24** of each of side frames **16** and **18**. When thus secured to side frames **16** and **18**, base support assembly **60** improves torsional rigidity of cart assembly **12**. An upper rectangular can support frame **86** comprises two similar "U" shaped members **88**, having spaced parallel end portions **90**, the free ends **92** of which are connected by similar, oppositely oriented, concave overlapping receptacles **48** (FIG. 2) torsionally interlocked by bolts **52**. Can support frame **86** is detachably mounted by bolts **94**, at forward end **96** to upper ends **98** of forward vertical support members **20** which are nested by concave inner corners **100** of frame **86**. At the opposite end **102**, can support frame **86** is detachably connected in like manner to extension members **42** at an elevation such that support frame **86** is maintained in a position parallel to base assembly **60**. A "U" shaped intermediate support frame **104** comprises upper transverse member **106** and vertical side members **108** and **110**. Vertical side members **108** and **110** are centrally secured by bolts **116** inside upper support frame **86** near upper ends **118**. Free ends of side members **108** and **110** are formed into arcuate portions **120** which are adapted to engage outer surface **122** of side frames **16** and **18** and are secured thereto by medial base mounting bolts **84**. A pair of frame stiffening braces **124** are secured by bolts **128** as shown in FIG. 1 between forward vertical support members **20** and horizontal members **24** of side frames **16** and **18**, respectively. Eight lower can positioning elements or rods **130**, four of which are spaced about lower periphery **132** of each of cans **134**, outlined by phantom lines, are installed during assembly of cart **12**, so as to guide and support lower portion **132** of cans **134**, having different dimensions, in a desired position for correct lid replacement. At upper ends **136** (FIG. 5) rods **130** are formed with open loops **138** and at the opposite ends **140** are provided with a short vertical portion **142**. The upper ends **136** of rods **130** at front end **82** of cart assembly **12** are inserted into appropriate apertures **144** provided in vertical support members **20** and are inclined inward having lower angular portions **142** inserted through apertures **146** provided in arms **70** of base support assembly **60**. Can positioning rods **130** at rear end **102** of cart assembly **12** are attached in like manner to rear vertical extension members **42** and arms **70** of base support assembly **60**. Four adjustable medial rods **130** have upper ends **136** attached through one of preselected spaced apertures **144**, of vertical side members **108** and **110** of intermediate support frame **104** and, being inclined inward, have lower vertical portions **142** inserted through apertures **146** in arms **70** of base support assembly **60**, selected to correctly retain cans **134** of various dimensions. Open ends **98** of forward vertical support members **20** are sealed by spring retained metal caps **148**.

An elongated axle **150** is removably inserted through aligned apertures **152** provided in horizontal members **24** of side frames **16** and **18** near front end **82** of cart

assembly 12. A pair of wheels 154, preferably equipped with rubber tires 156, are rotatably retained on outer portions of axle 150 by hub caps 158 and are spaced from side frames 16 and 18 by spacers 160.

Lid retainer assembly 14 includes three pivotally interconnected members, as shown; latching lid hold down bracket or clamp assembly 162, support frame 164 and clamp control link 168. Inversely mounted "U" shaped support frame 164 includes parallel spaced end elements 166 and upper connecting element 170. The free ends 172 of end elements 166 are formed at an angle providing inward projecting mounting stubs 174. Forward mounting stub 174 is pivotally attached by bolt 176 through one of selectable spaced holes 178 provided in upper portion 98 of vertical support member 20 of side frame 18. Rear mounting stub 174 is similarly attached by bolt 176 through hole 178 in extension member 42 of side frame 18. Lid clamp assembly 162 includes "V" shaped member 180 having short longitudinally disposed front handle element 182 joined to diverging hold down arms 184 which extend across can lids 186 in a line adjustably forward of conventional lid handles 188. Free ends 190 of arms 184 are configured inward and downward, as shown in FIG. 1, forming parallel connecting stubs 192 provided with aligned apertures 194. Connecting stubs 192 are inwardly positioned and coupled by bolts 196 to similarly aligned apertures 198 provided in upper end portion 200 of spaced end elements 166 of support frame 164. Transverse latch support arm 202 is centrally attached at one end 204 by bolt 206 to front element 182 of clamp assembly 162 and is centrally secured at opposite end 208 by bolt 210 to longitudinal brace 212 having ends 214 adapted to be attached by bolts 218 to clamp assembly 162. The desired lateral position and motion of clamp assembly 162 is assured by control link 168 which is pivotally interconnected between intermediate divider 104 and latch support arm 202 of clamp assembly 162. Control link 168 is coupled by bolt 230, at one end 222, to transverse member 106 of intermediate divider 104 through one of a plurality of spaced holes 224 provided near junction of vertical member 110 and transverse member 106, and at opposite end 226, to latch support arm 202 of clamp assembly 162 through aperture 228 provided at a point rearward of depression 231 of latch support arm 202. Lid clamp assembly 162 is firmly held in horizontally clamped position, by latch 232, shown in more detail in FIG. 7, preferably formed of rod or tubing so as to provide a measure of safety should hands or fingers come in contact with latch 232 when in process of being engaged. The rod or tube is formed into a "U" configuration, and provided with mounting eyelets 234. The free ends 236 of latch 232 are extended and configured, as shown, to provide actuating finger grips 238. Latch 232 is pivotally attached by bolt 240 to latch support arm 202 at a position immediately forward of depression 231 of support arm 202 and is held in a locking position against limit pin 242 by hairpin shaped spring 244. As clamp assembly 162 is pushed downward, latch 232 engages inwardly formed indent 246 of catch 248, which is secured by bolts 250 to vertical member 108 of intermediate divider 104. As lid clamp assembly is thus locked into position, lid hold down springs 252, shown more clearly in FIG. 6, secured through apertures 254 in arms 184, apply downward pressure along top surface 256 of outer periphery 258 of can lids 186. Handles 188 of lids 186 are attached to arms 184 by bolts 264 under straps 266, spaced apart from arms 184 by spacers, not shown, to slidably restrain handles 188.

An alternate lid retainer configuration 268 is shown in FIG. 8 wherein lids 186 of individual cans 134 are removed and replaced by separate retainer assemblies 270 and 272, installed to cart assembly 12. For purposes of clarity only top portions of cart 12 and cans 134 are shown. Assembly 270 is shown with lid in removed position, while assembly 272 is shown with lid installed to can and latched in place. Similarly constructed complementary retainer assemblies 270 and 272 each include three pivotally interconnected members, as shown, latching hold down bracket or clamp assembly 274, support frame 276 and clamp control link 278. Each of "U" shaped support frames 276 is of like construction to support frame 164 of multiple lid retainer assembly 14 previously described, but is dimensioned to be pivotally attached in like manner by bolt 280 at inner ends 282 to vertical member 110 of intermediate divider 104, and at outer ends 284 as previously attached. Lid support arms 286 are similar in every way to arms 184 of multiple clamp assembly 14 and are attached in like manner but to a separate support frame 276. Each handle member 288 is supported by separate latch support arms 290, pivotally attached to inward end 292 of support frames 276. A separate latch 232 is provided for each individual retainer assembly 270 and 272, and is configured and attached, as before, near handle member 288 of latch support arm 290. Mating indents or catches 294 are attached to inclined bracket 296 which engage latches 232 as lid retainers 270 and 272 are operated to hold down position, as shown in FIG. 8. Individual clamp control links 278, pivotally attached as before, interconnect between transverse member 106 of intermediate divider 104 and each latch support arm 290, which serves, as previously described, to control lateral position and motion of each of clamp assemblies 274.

An alternate can lid 300 particularly adapted to form a seal to containers which are dented or deformed is shown in FIG. 9 and may be used with the trash can holders herein described. A circular plate, provided with conventional handle 302 and preferably formed of a non-nutrient plastic or of metal, is equipped with a pliable pad 304 dimensioned to fit periphery of can or other container. When attached to a clamp assembly such as 162, as shown in FIG. 1, pressure is applied by hold down springs 252 of lid support arms 184 and pad 304 is forced into irregularities of can and thus provides an air tight seal to can or other type container.

With reference to FIGS. 10 and 11, lid retainer assembly 14 is shown bolted to cart assembly 12, only partially shown for clarity, and is shown in a latched down position in FIG. 10. Rear support frame 164 is shown as it is pivotally assembled to vertical support members 20 and 22 of side frame 18 (FIG. 1), and control link 166 is coupled to transverse member 106 of intermediate support frame 104.

Latch 232 is engaged with catch 248 and pressure is applied to can lids 186 by holddown springs 252, thus holding lids 186 and cans 134 firmly in place.

To operate lid retainer 14, an operator would grasp handle 182 and trip latch 232. When a lifting motion is applied to handle 182, control link 168 guides vertex of holddown assembly 162 first upward, lifting lids 186

from cans **134**, then in an arc toward rear side of cart **12** (FIG. **11**). Simultaneously rear support frame **164** supports rear portion of holddown assembly **162** in a downward arc to store lids **186** in a vertical position along rear side of cart as shown in FIG. **11**. A lifting motion applied to handle member **182** lifts lids **186** from side of cart while control link **168** and support frame **164** cooperate to engage rear lip of can lids **186** with upper rim of cans **134** assuring that lids **186** are accurately replaced on cans **134**. The operation of lid retainer assemblies **270** and **272** (FIG. **8**) is the same as that just described except that each individual lid **186** may be removed or replaced.

What is claimed is:

**1.** A portable refuse can holder comprising:

a pair of upstanding, U-shaped, tubular side frame members;

a pair of oppositely positioned, crossed, V-shaped tubular members interconnecting said side frame members and forming the bottom of the can holder, adjacent inner surfaces of each V-shaped tubular member at crossing points being flattened and the outer surfaces left tubular, and where connected to said U-shaped frame member, said V-shaped members are constricted to form a generally U-shaped contour with an inner abutting region conforming to the tubular surface of a said U-shaped member.

a rectangular horizontal frame member of tubular construction interconnecting upper regions of said side frame members and providing lateral support for refuse cans;

an inverted U-shaped tubular member extending between and fastened to the mid-longitudinal region of said U-shaped side frame members and said rectangular frame and dividing the interior of said can holder into two two-can holding regions;

a pair of wheels attached to the lower region of one end of said can holder; and

a pair of handlebars extending longitudinally from the upper end of said can holder opposite to the end to which the wheels are attached.

**2.** A portable refuse can holder comprising:

a pair of upstanding, U-shaped, tubular side frame members;

a pair of oppositely positioned, crossed, V-shaped tubular members interconnecting said frame members and forming the bottom of the can holder;

a rectangular horizontal frame member of tubular construction interconnecting upper regions of said side frame members and providing lateral support for refuse cans;

an inverted U-shaped tubular member extending between and fastened to the mid-longitudinal region of said U-shaped side frame members and said rectangular frame and dividing the interior of said can holder into two two-can holding regions;

a pair of wheels attached to the lower region of one end of said can holder; and

a pair of handlebars extending longitudinally from the upper end of said can holder opposite to the end to which the wheels are attached;

a refuse can lid holding assembly comprising:

mounting means pivotally connected and supported on vertical members of one of said U-shaped tubular side members;

a lid operating member supported on said mounting means and extending across the diameter of a can positioned in said can holder and at a level substantially above the pivotal connection of said mounting means to said frame;

lid fastening means for pivotally connecting a refuse can lid to said lid operating member;

first and second lid closing members mounted on said lid operating member and positioned above opposite edges of a said lid and including spring means for applying pressure between said lid operating member and a said lid;

whereby as said lid operating member is moved with a retained lid toward the top of a refuse can, the rear of a said can is first engaged by the rear lip of a said lid, moving the can forward until restrained, and thereafter the lid is thus moved downward into a closed position on a said can.

* * * * *