Dec. 8, 1936. D. H. MYERS 2,063,184

TIME SERVICE SYSTEM

Filed May 2, 1933

FIG. 1

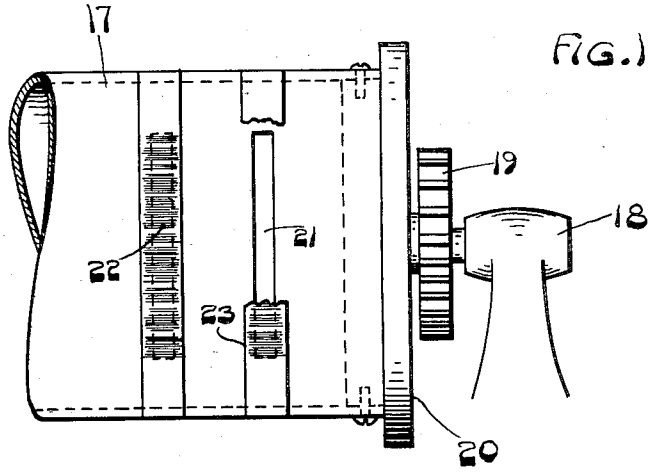

FIG. 2

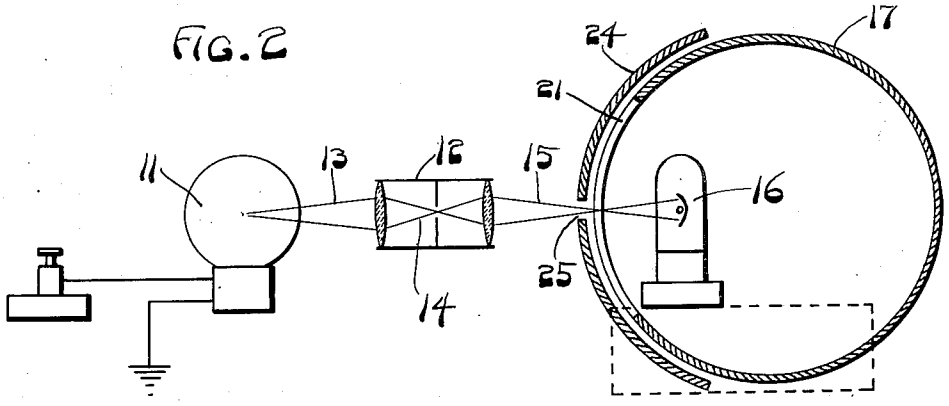

Inventor

Donald H. Myers

By Bogert & Bogert

Attorneys

Patented Dec. 8, 1936

2,063,184

UNITED STATES PATENT OFFICE

2,063,184

TIME SERVICE SYSTEM

Donald H. Myers, Cincinnati, Ohio

Application May 2, 1933, Serial No. 668,962

7 Claims. (Cl. 179—100.3)

On August 31, 1932, under Serial Number 631,197, an application was filed by me in conjunction with George Dalton Myers, covering a Time service system. The invention to which application Serial Number 631,197 refers employs a rotating element through which beams of light are projected for impinging upon photoelectric cells located on the opposite side of the moving wall of the element to be intercepted by sound records on the element surface and which are designed for reproduction by light sensitive apparatus functioned by the photoelectric cells.

In as much as such moving record-bearing elements as are contemplated in the illustrated disclosure of the application to which I have referred, are light pervious, certain objectionable features thereof have become obvious. For example, the fact that such elements were most practical as being of glass or other transparent material which is not only fragile but also expensive, made it desirable that they be made of other material. Also, because of the fact that certain cells decrease in efficiency if they are continuously exposed to light, such as would be the case through exposure to extraneous light other than the purposefully directed beams, it is desirable that such sound record-bearing elements be made in a manner such that they are both inexpensive and non-breakable, as well as opaque and also more readily adapted to record mounting and cell protection.

The objects of the present invention have been to overcome the objections and to obtain the advantages, both of which have been suggested above, in a simple structure, now to be described, and which has been disclosed in the accompanying drawing, in which:

Fig. 1 is a fragmental elevation showing a sound record-carrying element in association with mechanism details incorporated with my invention.

Fig. 2 is a somewhat diagrammatic sectional disclosure of mechanism embodying and in association with my invention.

In the invention as disclosed herein, I employ the same principle described in the application to which I have referred. This principle is incorporated in a mechanism which includes a source of illumination such as a lamp bulb 11 with a lens tube or projecting device 12 by means of which the light from lamp 11 is concentrated and projected as shown by lines 13, 14, and 15 onto the sensitive elements of the photoelectric cell 16. Cell 16 preferably is located within the sound record-bearing cylinder 17 which is rotatably mounted on bearings, such as suggested at 18, and which is driven by gearing, such as suggested at 19, through mechanism not shown. A disc 20 carries the cylinder 17.

Cylinder 17 is made of an opaque material such as metal or bakelite and the like. Within the wall of this cylinder the required number of slots 21 are cut. The number of these slots may be as described in the copending application to which I have referred. Preferably, they are placed in alignment, as the drawing suggests, and are of a width sufficient for the width of the beam 15. In this manner the sound track indications 22 which may be carried on a film or other light pervious agency 23, are handled satisfactorily by the pencil point beams passing through the slots at the film line. With nothing but these slots present in cylinder 17 there can be no extraneous light passing into the region of the light sensitivity of the cells 16, whereby they will decrease in efficiency over a period of time. Neither is there a danger of breakage such as is present with a glass cylinder, to say nothing of the cost of such a cylinder as compared with a cylinder of metal, bakelite or other opaque material. Furthermore, the use of metal or bakelite enables such sound record bearers as film, or etched glass segments to be fastened to the cylinder by clamps, screws, clips and the like in any suitable manner over the cylinder slots 21.

In the event cells of highly sensitive characteristics are employed, or in the event that cells are employed which have an efficiency subject to relatively rapid decrease or drop in life when subjected to extraneous light influences when not in use, there may be provided a stationary shield 24 through which but one aperture 25 is provided for each beam of light and cooperating slot 21. This shield may be of such a size as will protect the cells from all but direct light falling upon their elements. This shield also has the merit that it will protect the cells and record carrying elements from any damage to which they may be subjected through the slots.

Having thus described my invention what I claim is:

1. In a time service system an opaque sound record-bearing element having a portion permitting the passage of light therethrough and intercepted by the record of the sound to be reproduced, means for projecting light through said portion, means sensitive to light, adapted to receive the light after interception by the record, and means to move the element, whereby said element portion may be moved into the path of

light passing from the projecting means to the sensitive means to permit sound reproduction from said record, and whereby said element portion may be moved to block the path of light upon termination of said sound reproduction of said record.

2. In a time service system an opaque infrangible element having a portion permitting the passage of light therethrough, a sound record carried by the element in position to intercept the light, whereby its characteristics will be changed for sound reproduction purposes, means for projecting light through the portion, means sensitive to light adapted to receive the light after interception, and means to establish relative movement between the light and the element, whereby said portion is moved to permit light passage for sound reproduction purposes, and alternately moved to block light passage.

3. In a time service system a rotatable opaque sound record-bearing element having a portion permitting the passage of light therethrough and intercepted by the record of the sound to be reproduced, means for projecting light through said portion, means sensitive to light, adapted to receive the light after interception by the record, and means to rotate the element, whereby presentation of said portion to the light will facilitate sound reproduction from said record, and alternate removal of the portion from the light will prevent sound reproduction from the record.

4. In a time service system a rotatable opaque infrangible cylindrical element having a portion permitting the passage of light therethrough, a sound record carried by the element in position to intercept the light, whereby its characteristics will be changed for sound reproduction purposes, means for projecting light through the portion, means sensitive to light located within the cylinder to receive the record-intercepted light, and means to rotate the cylinder, for alternate presentation to and removal of the portion from the light to expose and protect the light sensitive means as desired.

5. In a time service system, a rotatable opaque sound record-bearing hollow cylinder having an opening in the wall thereof permitting the passage of light to the interior of the cylinder and intercepted by the record of the sound to be reproduced, a light projector exterior the cylinder and projecting light through the opening therein, a light-sensitive cell within the cylinder in position to receive light from the projector through the cylinder opening, means to rotate the cylinder, a stationary shield inclosing the cell and having an opening therein in register with the light passing from projector to cell.

6. In a time service system, a rotatable opaque sound record-bearing hollow cylinder having an opening in the wall thereof permitting the passage of light to the interior of the cylinder and intercepted by the record of the sound to be reproduced, a light projector exterior the cylinder and projecting light through the opening therein, a light sensitive cell within the cylinder in position to receive light from the projector through the cylinder opening, means to rotate the cylinder, a stationary shield inclosing the cylinder and having an opening therein in register with the light passing from projector to cell.

7. In a time service system, a rotatable sound record bearing hollow cylinder opaque to the passage of light except at a portion bearing a sound record of the type rendered effective by the passage of light therethrough, a light projector exterior the cylinder and projecting light through said portion for interception by said record, a light sensitive cell within the cylinder in position to receive light from the projector through the cylinder portion, means to rotate the cylinder, and a shield adjacent to the cylinder wall and opaque except as to a light pervious portion to register with the corresponding portion of the cylinder during rotation of said cylinder, whereby when said cylinder rotation is discontinued so that the said cylinder and shield portions are out of register, said cell will receive no light from said projector.

DONALD H. MYERS.