No. 612,672. Patented Oct. 18, 1898.

A. J. PIERCE.

MUSIC SHEET AND TURNING DEVICE THEREFOR.

(Application filed July 23, 1897.)

(No Model.)

FIG. 1.

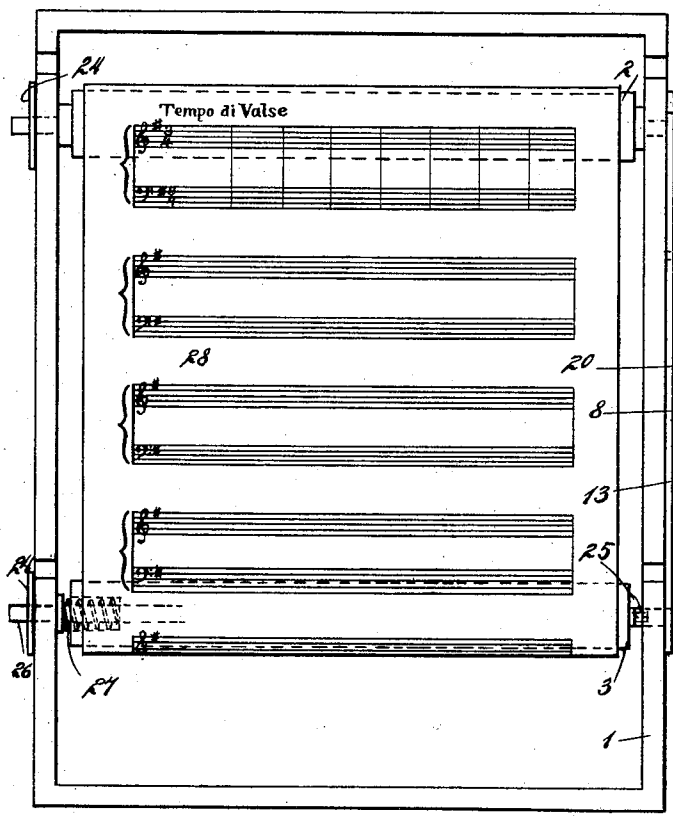

FIG. 2.

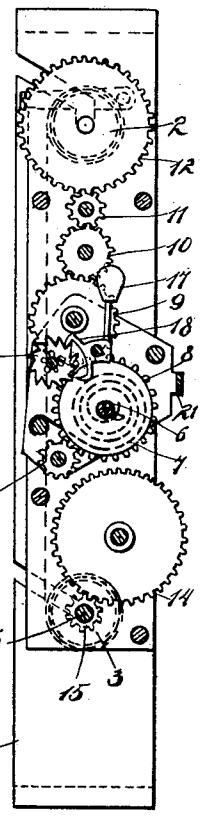

FIG. 5.

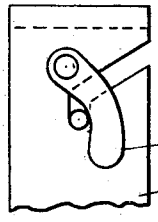

FIG. 6.

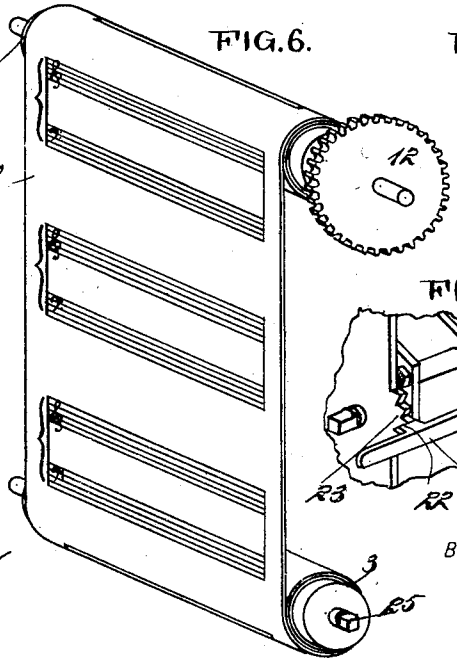

FIG. 3.

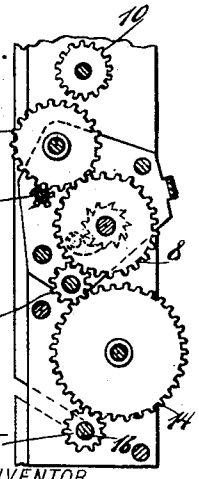

FIG. 4.

WITNESSES:

Donn Twitchell

C. R. Ferguson

INVENTOR

A. J. Pierce.

BY

Munn & Co

ATTORNEYS.

THE NORRIS PETERS CO., PHOTO-LITHO., WASHINGTON, D. C.

UNITED STATES PATENT OFFICE.

ALMON J. PIERCE, OF NEW YORK, N. Y.

MUSIC-SHEET AND TURNING DEVICE THEREFOR.

SPECIFICATION forming part of Letters Patent No. 612,672, dated October 18, 1898.

Application filed July 23, 1897. Serial No. 645,687. (No model.)

To all whom it may concern:

Be it known that I, ALMON J. PIERCE, of New York city, in the county and State of New York, have invented a new and Improved Music-Sheet and Turning Device Therefor, of which the following is a full, clear, and exact description.

This invention relates to music-sheets, in connection with a turning device; and a main object is to adapt the music, as to the space between its bars, to the uniform rate of speed of the turning device.

I will describe my invention and then point out the novel features in the appended claim.

Figure 1 is a front elevation of a music-turning device that may be employed with my invention and showing a continuous sheet of music thereon. Fig. 2 is a section on the line 2 2 of Fig. 1 and showing the motor as arranged for turning the music-sheet forward. Fig. 3 is a detail showing the motor mechanism as reversed to return the music-sheet. Fig. 4 is a detail showing a means for holding the reversing mechanism in position. Fig. 5 is a detail showing a means for holding the rollers in their bearings, and Fig. 6 is a perspective view showing a modification in the printing of the music-sheet.

Referring to the drawings, 1 designates a frame of any suitable material and in which is mounted to rotate the take-up roller 2 and a feed-roller 3. Affixed to one side of the frame 1 is a motor-frame 4, and in this motor-frame is mounted to swing a frame 5. Having journal-bearings in tbe swinging frame 5 is a winding-shaft 6, to which one end of a motor-spring 7 is attached, the other end of said spring being attached to a bar secured to the swinging frame 5. Secured to the shaft 6 is a gear-wheel 8, meshing with a gear-wheel 9, also having journal-bearings in the swinging frame, and this gear-wheel 9 is adapted to be moved into engagement with a pinion 10, having its shaft-bearings in the motor-frame, and this pinion 10 meshes with a smaller pinion 11, which engages with a large gear-wheel 12 on the extended shaft of the roller 2. Also mounted to rotate in the swinging frame 5 is a pinion 13, engaging with the gear-wheel 8 and designed to be moved into engagement with a gear-wheel 14, meshing with a pinion 15 on the shaft 16, having bearings in the motor-frame. The speed of the motor is regulated by a weight 17 on an arm extended from an escapement 18, engaging with an escapement-wheel 19, on the shaft of which is a pinion 20, meshing with the gear-wheel 9. It may be desirable, however, to employ a governor operated by a worm-wheel in order to insure noiseless action. The frame 5 is mounted to swing on the winding-shaft 6 and is held in its adjusted position by means of a lever 21, having a dog 22 for engaging in either one of a series of notches 23, formed on the edge of the motor-frame.

The frame 1 is provided with upward-inclined and outward-opening slots, the bases of which form the bearings for the journals of the roller 2, and these journals are held from outward movement by means of arms 24, pivoted to the sides of the frame and adapted to engage against the forward sides of the journals. The feed-roller 3 has at one end a trunnion, made angular in cross-section, as at 25, to engage in a correspondingly-shaped socket in the shaft 16, and at the opposite end this feed-roller 3 is provided with a shaft 26, movable in a longitudinal perforation in the end of the roller and held yieldingly by means of a spring 27, which engages at one end against a collar on said trunnion and at the other end against the roller. Obviously by moving the roller 3 lengthwise its angular portion 25 may be moved out of the recess in the shaft 16, and then the roller, to which one end of the music may be permanently attached, may be removed from the frame 1.

In operation when it is desired to move the music forward the swinging frame will be rocked to engage the lever 21 in the lower one of the notches 23. This will place the gear-wheel 9 in engagement with the pinion 10, and thus the roller 2 will be rotated in the direction to carry the music forward. When it is desired to reverse the sheet or to return it to bring its first bars in line, the lever 21 must be shifted to engage in the upper one of the notches 23, and at this time the pinion 13 will be engaged with the gear-wheel 14, thus rotating the roller 3 to return the music, as described.

It will be noted that the pinion 15 is quite small as compared with the gear-wheel 12 and that the gearing between the pinion 15 and

the gear-wheel 8 is so arranged that the motor will operate to return the music to its starting-point much more rapidly than it is fed forward by its forward-moving gear. It will be further noted that a single spring is employed for moving the music in both directions.

As the forward movement of the motor is uniform as to its speed it is necessary to so print the staves of the music-sheet as to compensate for the relation between the speed of the motor and the time of the music. This object of my invention I carry out by variously spacing the staves on a sheet, as indicated in Figs. 1 and 6.

It will be noted that with the reversing mechanism for the motor in case a song is to be played and sung the music may be at once brought back to view when the first verse is completed, thus avoiding the necessity of reprinting the notes for each verse.

The ends of the music-sheet may be attached to the rollers in any desired manner. For instance, they may be hooked onto a flap projecting from the roller, as each sheet of music should be provided with a suitable fastening on each end, so that if desirable several pieces of music may be attached to each other and wound on the feed-roller 3 before beginning to play. It may also be desirable to provide a feed-roller for each sheet of music, as when not in use the music rolled thereon will be preserved from damage and kept clean.

I have described a spring-operated motor, but it is obvious that other forms of motor may be employed—such, for instance, as an electric motor—without departing from the spirit of my invention, and in case an electric motor is employed its driving-current may also be employed for a lamp mounted on the frame or otherwise.

The music-sheet-turning device may be inclosed in a suitable casing made as ornamental as desired and provided with a swinging door, so that when not in use the parts will be wholly protected from dust.

Having thus described my invention, I claim as new and desire to secure by Letters Patent—

The combination with rollers and a motor for rotating the rollers at a uniform and predetermined speed, of one or more printed music-sheets having the time of the music printed thereon and the staves differently spaced, so as to accommodate the time of the music to the speed of the motor.

ALMON J. PIERCE.

Witnesses:
BASTABLE J. HAWKES,
E. G. ROSENBERG.