Oct. 11, 1932. A. M. COYLE 1,881,421

TUNNEL CONSTRUCTION

Filed April 4, 1930 2 Sheets-Sheet 1

Fig. 1.

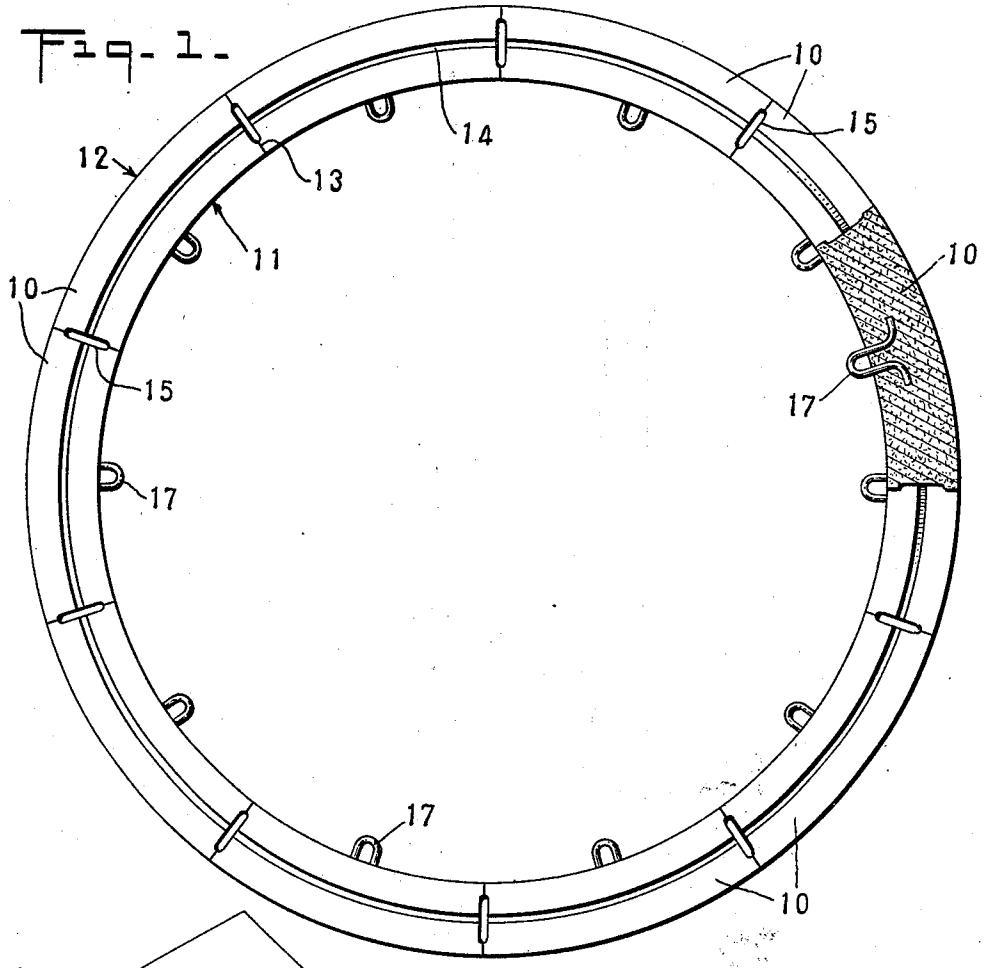

Fig. 2.

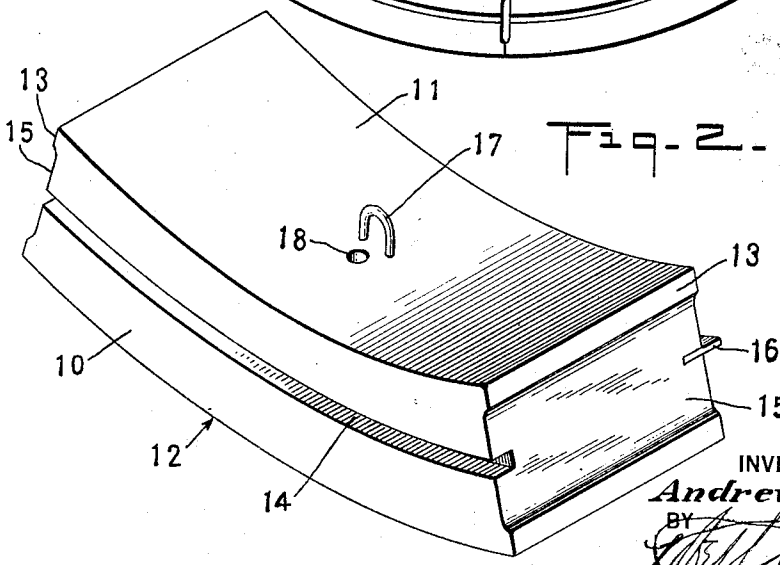

INVENTOR
Andrew M. Coyle,
BY
ATTORNEY

Oct. 11, 1932. A. M. COYLE 1,881,421

TUNNEL CONSTRUCTION

Filed April 4, 1930 2 Sheets-Sheet 2

Fig. 3.

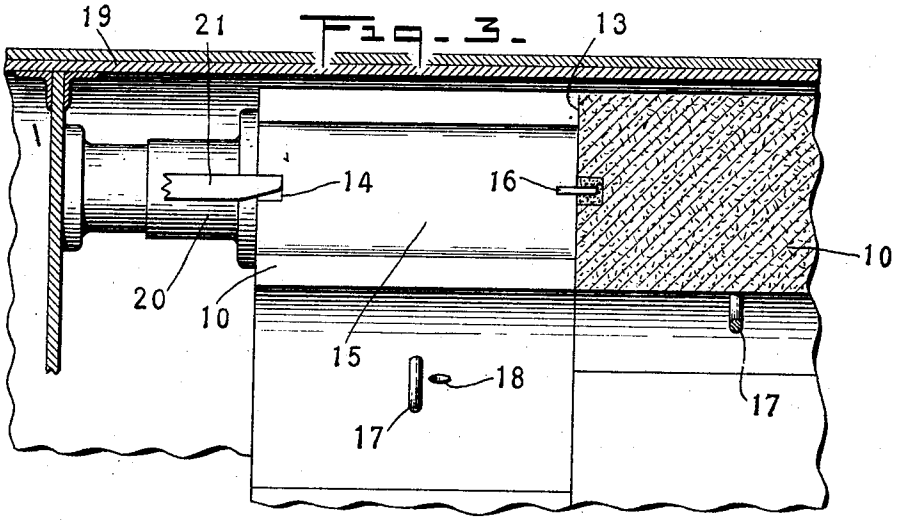

Fig. 4.

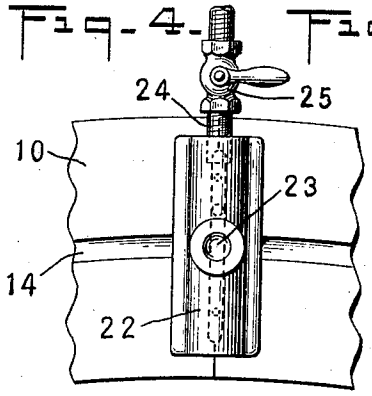

Fig. 5.

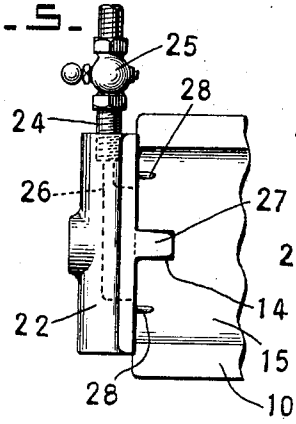

Fig. 6.

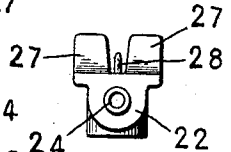

Fig. 7.

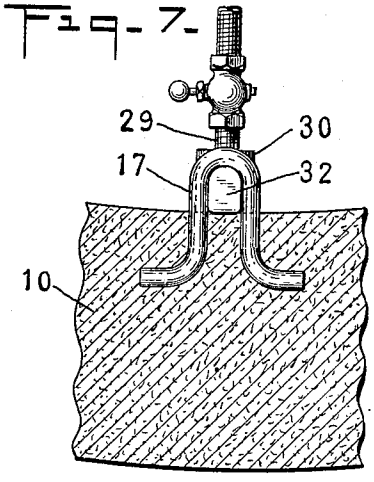

Fig. 8.

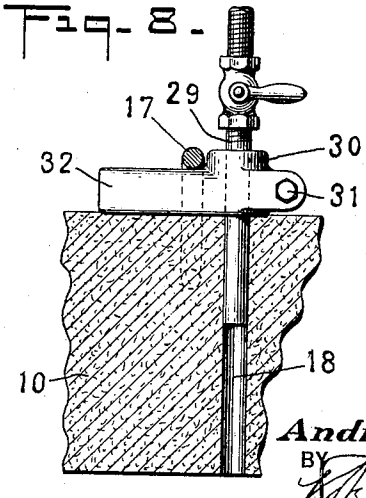

Fig. 9.

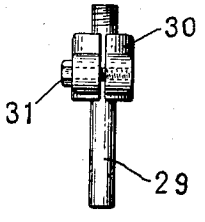

INVENTOR

Andrew M. Coyle,

BY

ATTORNEY

Patented Oct. 11, 1932 1,881,421

UNITED STATES PATENT OFFICE

ANDREW M. COYLE, OF MOUNT VERNON, NEW YORK

TUNNEL CONSTRUCTION

Application filed April 4, 1930. Serial No. 441,550.

This invention relates to the construction of tunnels especially those formed of concrete and other blocks and used as subways, and has for its object to simplify the construction, to reduce the cost and increase the rigidity of such tunnels.

In one practical type of concrete block tunnel construction the blocks are provided with large projections on a lateral face which engage similar recesses of a contiguous block. It is customary for plungers to be carried by the shield for pressing against the blocks to hold them in place and to push the shield forward. With these large projections and recesses, the area of the block side face which is available to receive the heavy pressure is not as large as is desired. By substituting a narrow groove and a metal tongue for the large receses and projections, practically the whole side face of the block is available to receive the pressure of the plungers. When blocks are recessed as in present practice it would be a difficult operation to spread an even coat of cement or other bonding material upon the face of the block. On this account it is customary to set the blocks dry and then to force grout into the joints. In order to flow through these narrow joints it is necessary to use very thin grout. When the joints are filled in this manner the result is uncertain. The joint may or may not be completely filled. Inspection is impossible. When thin grout sets it is not substantial. The flat face of the block shown herein, and the method hereinafter described of coating the surface with well mixed cement mortar or other plastic material does insure a completely filled joint. The surface may be inspected before the new block is set and the engineer in charge can be certain of the character of the work.

Referring to the drawings:

Fig. 1 shows an end of a tunnel section partly in section.

Fig. 2 is a perspective of one of the improved blocks used in this invention.

Fig. 3 is a detail section along a longitudinal center line through the top of the tunnel in Fig. 1.

Fig. 4 shows the device for blowing the mortar into the bonding recess between block ends.

Fig. 5 is a side view of the device shown in Fig. 4.

Fig. 6 is an end view of the device shown in Fig. 4 removed from the block.

Fig. 7 is a front view showing the pipe clamp held in position under the staple on the inner face of the block.

Fig. 8 is a side view of the device shown in Fig. 7.

Fig. 9 is a rear view of the pipe clamp of Figs. 7 and 8.

The tunnel of Fig. 1 consists of a number of blocks 10, in this case ten, of concrete or other suitable material capable of being bonded and formed into the tunnel construction illustrated. Each block has an inner face 11 curved on a radius about the center of the tunnel, an outer face 12 curved about the same center, and radial ends 13.

One lateral face of each block is provided with a recess 14 for the reception of cementitious material and the curved metal projecting strip 16 of a contiguous block. This strip or rib 16 is preferibly cast in position when the block is being molded. If desired, this metal rib may be tapered slightly toward its outer edge in order to more easily enter the recess 14 of a contiguous block and eject mortar therefrom. It has been found that such a metal rib is capable of withstanding the stresses to which the tunnel may be subjected and yet is capable of doing what a large or integral rib could not do, namely, eject mortar from the recess 14 as the rib is moved into the recess under pressure exerted longitudinally of the tunnel. The central portion of the inner face of a block preferably has a staple 17 molded therein. Adjacent the staple is a passageway or a perforation 18 which extends all the way through the block from the inner face to the outer face so that after being erected filling material may be forced or blown through the perforation 18.

As shown in Fig. 3 the usual metal shield 19 extends along the outside of the blocks for several courses and is moved forward by pressure against the blocks as the courses are

successively erected. To erect a course the blocks are laid beginning at the bottom and then building up to the top, the top block or blocks being put in place last and when in position act as keystones of an arch.

Each course is laid with the ribs 16 on the rear side and the groove 14 at the front. When a ring course of blocks has been completed the shield is pushed forward by the action of the plungers, so as to provide space for a new ring course. After the shield has been advanced a sufficient distance the valves controlling the hydraulic pressure are closed, leaving the plungers in an extended position, bearing upon the blocks. When a block of the new ring is to be set, two or more plungers are withdrawn to make space for the block. The grooves, 14, in the faces of the blocks which are in place, are then completely filled with cement mortar or other plastic material, and the faces of the blocks in place are coated with the same material, excepting for spaces of about one inch at the inner and outer edges. These exposed edges are used to guide a sweep or scraper which is passed over the face of the blocks, so as to leave the coating of even thickness. In practice the groove 14 is filled and the coating applied by tools (not herein described), so that the plastic is applied quickly. The surfaces having been thus prepared the block to be set is brought into position so that the rib 16 of the block being set is in line with the filled groove 14, and the radial face of the block being set is in abutment with any block already in place in the new ring. The block is then pushed into place (by machinery not herein described) and the plungers which were withdrawn to make room for the block are advanced, sufficient pressure being applied to force the tongue 16 into the groove 14, and to firmly bed the block in the plastic material, which material is forced outward toward the edges of the blocks. This method of setting a block produces a completely filled joint, and is more certain than the method of forcing the grout between the blocks after they have been set in place.

Under all ordinary circumstances the pressure exerted by the plungers may be relied upon to hold the block in place. These blocks are roughly 18″ thick, about 30″ wide and about 5′ long along their inner surface and weigh over 1½ tons so that precautions must be taken to guard against a block accidently falling before the keystone is in place. There are conditions which might release this pressure, such as the bursting of a pipe or fitting, or the movement of a wrong valve by the operator. It is, therefore, desirable to provide some sort of safety device for supporting the blocks in the upper part of the ring, so as to guard against accident should the pressure of the plungers be released. This holding means comprises a safety support 21 which has a slidable member adjustably secured to the shield and adapted to engage the groove 14 of each block between plungers so that even if the plungers should be released this safety support 21 will retain the blocks in position and prevent their falling.

When the block is put in place the plungers exert a substantial pressure on each block generally in excess of 50,000 lbs. so that the mortar is squeezed out from between the blocks leaving a very close joint which may be struck off with a trowel on the inside.

The radial end faces of each block are contiguous at their inner and outer portions as shown in Figs. 1 and 2, while between these contacting portions each block has a recess to provide a space for a cementitious bond. Instead of filling the space 15 with a very thin grout as is customary, a thicker material is forced into the recess under pressure.

This use of heavier material is to lessen likelihood of blowing out and not forming a good bond. To inject such cementitious material into the recess 15, the filling cap 22 is placed over the forward end of recess 15. This cap as shown in Figs. 4 to 6 inclusive, is provided with a socket 23 which receives the end of a small jack screw which rests against the shield to hold the cap in place. A filling pipe 24 provided with a valve 25 supplies the material under pressure for filling the recess 15. As shown in Fig. 5 the cap 22 has an internal passage 26 leading to the recess. In order to position the cap radially of the tunnel and at the same time to block the grooves 14 against the loss of material being injected, the cap 22 is provided with projections 27 shown clearly in Figs. 5 and 6. To assist in positioning the cap material over the recess 15 with the passage 26 in alignment with the recess, the cap is also provided with small lugs 28 which enter the recess 15.

By turning on the valve the bonding recess 15 will be filled and after being filled the cap 22 may be removed before the bond has set. This can be done because the grout is thick and can be held back by a little mortar placed with a trowel. It will be understood that the block joints in the various courses are not aligned so that the opposite end of each recess 15 is closed by the previously formed course and the contacting end portions of each block prevent the escape of bonding material, especially when thick grout or mortar is used.

The staple 17 is to assist in handling the block which is preferably cast with its inner or concave surface uppermost as shown in Fig. 2. On removal of the top and ends of the mold the block may be lifted by means of the staple and carried where desired to be dried or cured. The staple 17 also serves to

lift the block on to a truck for hauling to the work, and enables it to be lifted on to the cars for movement through the tunnel and into the shield, and finally the staple 17 enables the block to be lifted by the erector arm and set in place. This staple is preferably made of 5/8" bar steel and is cast into the block and firmly bonded, so as to be capable of supporting a load of five tons. Hitherto it has been the practice to cast cavities in the blocks and to handle them by means of specially designed tongs or clamps, which fit into these cavities. There are several objections to this arrangement. The cavities complicate the casting of the blocks and to some extent weaken the construction. After the tunnel is completed the cavities have to be filled, which requires labor. The edges of the cavities are sometimes broken by the tongs or clamps, and the blocks dropped. When the moulds are removed the blocks are easily handled by a derrick, the hook being inserted in the staple. When the blocks are being erected the attachment on the erector arm is extremely simple. The erector arm head is provided with a slotted plate. This slot receives the staple and a bolt is thrown through the staple by means of a lever. This is simpler and more positive than the present method of setting up clamp jaws by means of screws.

Heretofore the passages through the blocks used for grouting and filling have been provided with screw threads and the grout or fill pipes screwed in. This takes time. The threads on the pipes soon become damaged and have to be renewed. To avoid this disadvantage the present invention contemplates the provision of a clamp 30 for the pipe 29 shown in Figs. 7 to 9 inclusive. The outer end of this clamp is split in the usual manner and provided with a tightening bolt 31 while the opposite portion of this clamp has a projection 32 which is shaped to fit into the staple and when so fitted hold the pipe 29 in position for forcing filling material through the perforation 18 into the space along the outside of the tunnel. By using the staples and the device shown in Fig. 8 the operation of connecting the pipes is greatly facilitated. During the construction of the tunnel, and after its completion a number of pipes, conduits and electric wires have to be supported on the walls of the tunnel. Heretofore, supports for these have been provided either by driving wood blocks into the cavities or by expansion bolts driven into the blocks. The staples provide convenient anchorages for the pipes, etc. During construction it is frequently necessary to use a block and fall, either to hoist material or to draw some heavy object horizontally. The staples provide convenient attachments for the block and fall. After the tunnel is completed such staples as are not wanted can be easily clipped off by a special tool provided for that purpose. This requires no scaffolding, and can be done in much less time than required to fill the cavities.

I claim:

1. A tunnel comprising blocks having curved interlocking means on the lateral faces, and end faces contacting along their inner and outer portions and recessed between said contacting portions, and an enclosed cementitious bond between the block end faces and between said inner and outer contacting portions.

2. A tunnel comprising concrete blocks having interlocking means on the lateral faces, and radial end faces contacting along their inner and outer portions and recessed between said contacting portions, and an enclosed cementitious bond between the block end faces and between said inner and outer contacting portions, said interlocking means comprising a grout filled narrow recess on the front and an arcuate metal tongue on the back of each block shaped for movement longitudinally of the tunnel into the narrow recess of contiguous blocks.

3. A tunnel comprising cementitious blocks having interlocking means on the lateral faces, and radial end faces, said interlocking means comprising a narrow longitudinal grout receiving recess on the front lateral face and a curved metal rib on the back lateral face of each block for reception in the recess of contiguous blocks, the front lateral face of each block being broad and flat except for said narrow grout recess whereby a large bearing surface is provided against which shield actuating jacks may press, and said metal interlocking rib being adapted to withstand stresses which would require a much larger rib if the same were made of cementitious material, whereby a strong tunnel results and the blocks are adapted to offer wide jack bearing surface.

4. The method of erecting tunnel blocks having symmetrical ends and provided with interlocking means for the lateral faces which comprises sliding a block in place with cementitious material between its rear lateral face and the front face of contiguous rear blocks and with its end abutting the inner and outer end portions of a contiguous block, said abutting end portions being in sliding contact as the block is pushed in place, holding the block in position and then filling a deep recess between the abutting ends with grout, while covering the open front end of said grout recess through which the grout is supplied, until after said grout has set sufficiently to preclude its running out of said recess, said grout being thick enough to be retained within the recess by the abutting end portions which are in sliding contact.

5. A tunnel block of cementitious material provided on its rear face with a curved inter-

locking rib and having on its front face an arcuate recess adapted to receive the rib of another block, the end faces of said block being provided with narrow portions adapted to contact with contiguous blocks adjacent the top and bottom faces, the portion of the end faces between said contacting portions being recessed for at least the major portion of the depth of said block for receiving a cementitious bond.

6. A tunnel block of cementitious material comprising an arcuate metal rib held within its rear face, said rib being strong enough to transmit radial thrusts on said block, and being much stronger than a rib of the same cementitious material as the block and several times thicker, the front face of the block being provided with an arcuate recess for receiving the rib of the block in front of it, said rib being also thin enough to eject bonding material from the recess of the contiguous block into which it is forced, and the end faces of said block being provided with bond receiving recesses intermediate inner and outer narrow portions adapted for contact with contiguous block end faces.

7. A tunnel block having a curved interlocking rib on one lateral face and a narrow grout receiving recess on its opposite lateral face, and the end faces of which are adapted to contact with adjacent blocks along their inner and outer portions, at least one end face of said block being recessed between said contacting portions, for receiving cementitious material bonding such end face to the end face of a contiguous block, a supporting staple projecting from the central portion of the inner face of said block and said block being provided with a perforation extending through the block from the inner to the outer face adjacent said staple.

ANDREW M. COYLE.