Jan. 19, 1943. A. H. REIBER 2,308,543

TAPE PERFORATOR

Filed April 5, 1940 2 Sheets-Sheet 1

FIG. 3

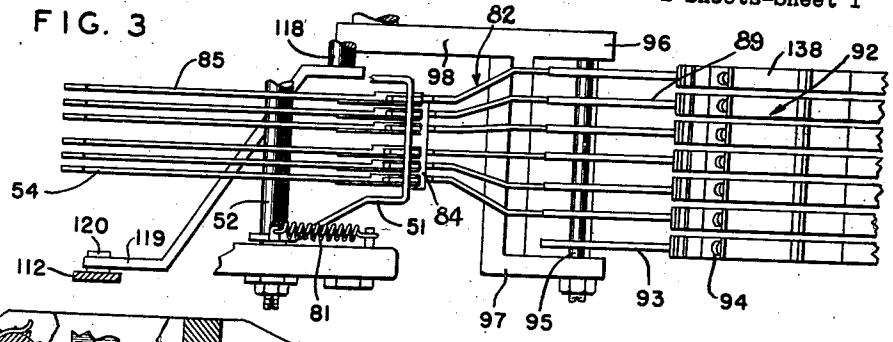

FIG. 1

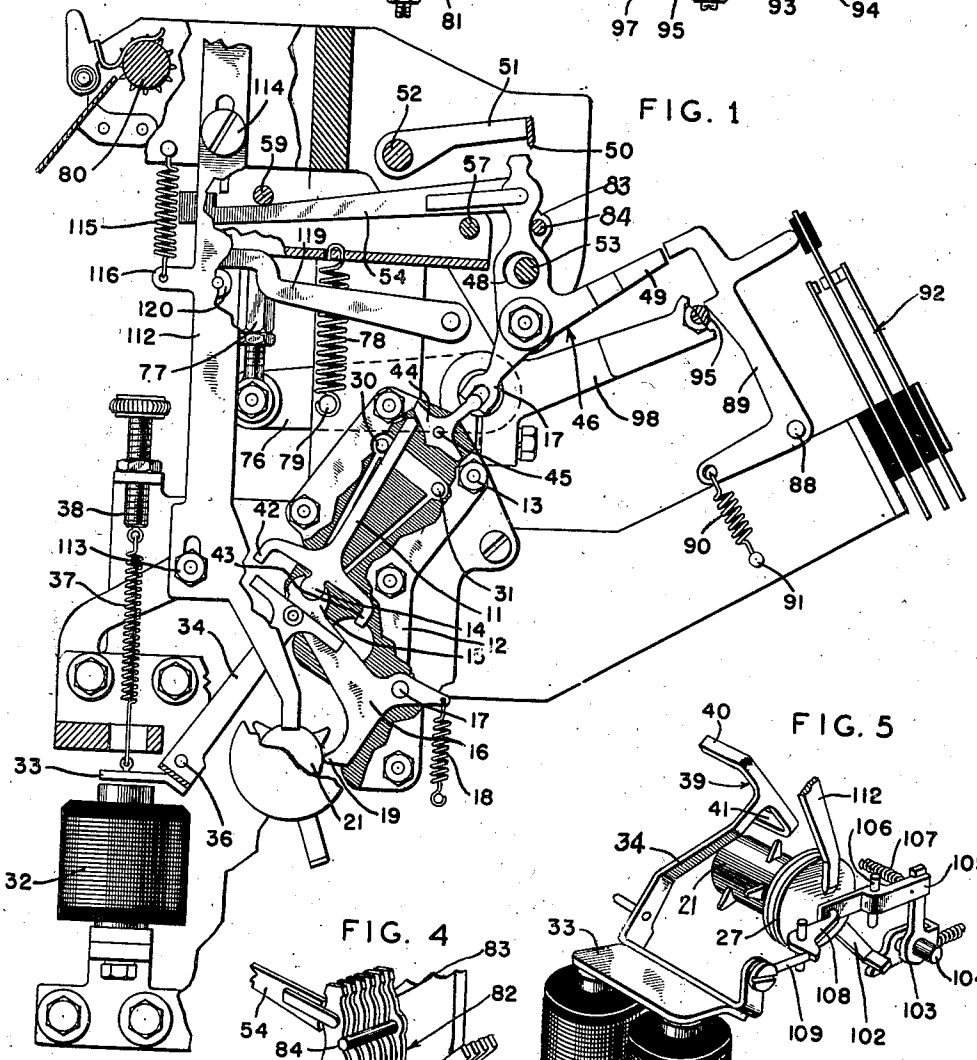

FIG. 4

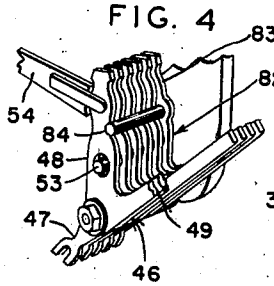

FIG. 5

INVENTOR.
ALBERT H. REIBER

BY

ATTORNEY.

Jan. 19, 1943. A. H. REIBER 2,308,543

TAPE PERFORATOR

Filed April 5, 1940 2 Sheets-Sheet 2

FIG. 6

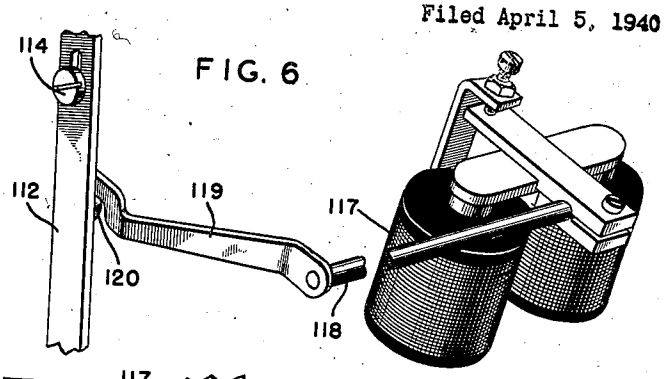

FIG. 2

FIG. 7

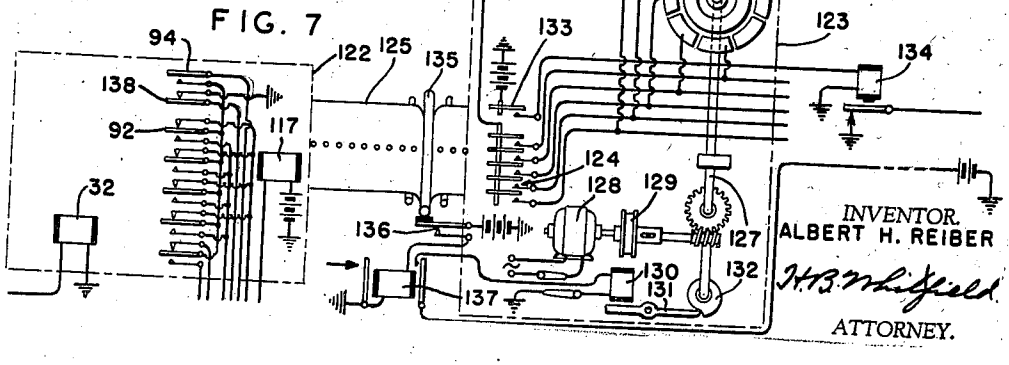

INVENTOR.
ALBERT H. REIBER
H. B. Whitfield
ATTORNEY.

Patented Jan. 19, 1943 2,308,543

UNITED STATES PATENT OFFICE

2,308,543

TAPE PERFORATOR

Albert H. Reiber, Evanston, Ill., assignor to Teletype Corporation, Chicago, Ill., a corporation of Delaware

Application April 5, 1940, Serial No. 327,956

8 Claims. (Cl. 178—92)

This invention relates to signaling apparatus and more particularly to printing telegraph apparatus responsive to signaling impulses for producing a perforated strip and for the selective control of electrical circuits.

An object of the invention is the provision of apparatus responsive to signaling impulses for correspondingly perforating a strip and for operating electrical contacts for the selective control of electrical circuits for controlling telegraphic communication channels in a facile and expeditious manner.

Another object is the provision of a perforator responsive to signaling impulses arranged to perforate an additional hole in a strip in response to a predetermined signaling condition.

A still further object of the invention is the provision of a perforator responsive to signaling impulses arranged to perforate a strip in accordance with the received signaling impulses and to operate invariably for each operation of the perforator for a set of electrical contacts for functional control of electrical conditions involved in a printing telegraph switching system.

The above and other objects of the invention are achieved by the provision of a perforator embodying a single magnet selector mechanism for setting selectively punch interponents which, upon the operation of a cam operated punch hammer, perforate a tape corresopnding to the received signals. Under certain conditions of the interponents, it is desirable to perforate an additional hole for particular circuit control, and accordingly an additional punch will be operated by the punch hammer when the interponents in response to a particular signal assume a predetermined position. Only upon such setting of the interponents will the additional punch be operated.

Selective control of circuits through the operation of the punch interponents is desirable and the present invention attains this result by the provision of levers which permissibly assume the position of the punch interponents to control correspondingly electrical contacts and the circuits under their control.

For each operation of the perforator; that is, each time the operating cam shaft of the perforator is released for operation, a set of contacts included in the electrical circuits under the control of elements of the perforator will be operated for performing functions allocated thereto. Invariably for each operation of the cam shaft of the perforator a particular electrical contact will be operated for a particular electrical circuit control.

A more complete understanding of the invention may be had from the following description taken in conjunction with the accompanying drawings, wherein

Fig. 1 is a side elevational view of the apparatus embodying the invention;

Fig. 2 is an end elevational view of the apparatus showing particularly the mechanism for operating the punch hammer;

Fig. 3 is a partial plan view of the apparatus shown in Fig. 1;

Fig. 4 is a detailed view showing the setting of the additional interponents in response to the predetermined setting of the other interponents;

Fig. 5 is a view of the mechanism for the control of tape spacing;

Fig. 6 shows the electromagnet for operating the tape spacing mechanism in response to predetermined conditions; and

Fig. 7 shows schematically the application of the apparatus to an electrical circuit.

Reference should be had to Patent No. 1,884,743 issued October 25, 1932, to E. E. Kleinschmidt, for specific details of the perforating apparatus not disclosed herein.

Selector operation

Referring now to the drawings wherein like reference characters indicate similar parts throughout the several views, there is shown in Fig. 1 a selective mechanism comprising a set of selector elements in the form of thin, flat fingers or swords 11 arranged in juxtaposition relation with guide plates 12. These plates are mounted on studs 13 and suitably placed washers (not shown). The circular rear ends 14 of the swords 11 engage correspondingly shaped sockets 15 in a corresponding number of flat bell cranks 16 pivotally mounted on a common shaft 17. Individual springs 18 normally hold the bell cranks and selector fingers or swords in the position shown in Fig. 1 with the pointed lower end 19 of the bell cranks 16 in contact with a cam on a selector cam barrel 21 on the main operating shaft 22 (Fig. 2) which is driven continuously by a motor 23 through a pinion 24 secured to the motor shaft 25, which meshes with a gear 26 secured to shaft 22.

As shown in Fig. 2, the selector cam barrel 21 is frictionally driven through a friction clutch 27 inserted between the continuously rotating shaft 22 and the selector cam barrel 21. Pressure for promoting the frictional relationship between

the elements of the friction clutch is supplied by a coiled compression spring 28. The selector cam barrel 21 is provided with a helically arranged series of cams 29 which engage the end 19 of the bell cranks 16 successively and thus reciprocate longitudinally the swords 11 as the cam barrel 21 is rotated.

In addition to their longitudinal movement, the swords 11 also have a lateral swinging movement between the pair of studs 30 and 31. The setting of each sword 11 either to its right-hand or its left-hand position is determined by a single selector electromagnet 32 which is mounted adjustably in the apparatus. Armature 33 of electromagnet 32 is secured to a selector lever 34 which is pivoted on a shaft 36 suitably mounted in the frame of the apparatus and which is subjected to the pull of a spring 37 distended between the armature 33 and an adjustable screw 38. Lever 34 terminates in a U-shaped portion 39 (Fig. 5) arranged with laterally extending arms 40 and 41 which cooperate with the arms 42 and 43 of the swords 11 for moving the latter either in a right-hand or a left-hand position.

The swords 11 act through a corresponding number of T-shaped levers 44 arranged between the guide plates 12 and pivotally mounted on a stud 45 to position a set of Y-shaped levers 46, each provided with a plurality of arms 47, 48, and 49. The springs 18 associated with bell cranks 16 normally hold the swords 11 in their forward position and in engagement with the T-levers 44, maintaining the latter in either one or the other of its two selective positions according to the position of the associated swords 11.

Arm 47 of each of the levers 46 has its lower end bifurcated to receive one arm of its associated T-lever 44. The other arms 48 and 49 of each of the levers 46 will be specifically identified later in their relationship with the other elements of the apparatus.

As the signal impulses are received, electromagnet 32 responds to one of the two different electrical conditions comprising the signals attracting its armature 33 when a marking impulse is received and releasing it in response to a spacing signal while the swords 11 are reciprocated successively and in synchronism with the received signals through the corresponding operation of cams 29 on the periphery of the selector cam barrel 21. The arms 42 and 43 of each of the swords 11 are thereby brought into operative relation with the extending arms 40 and 41 of the selector lever 34 at the corresponding signal interval, setting the swords 11 in varying combinations. The levers 46 are likewise set in varying combinations corresponding to the particular setting of swords 11 for each received code combination of signals through the corresponding operation of the T-levers 44.

Perforating operation

Each arm 48 of the levers 46 is beveled in its extremity for cooperation with a knife-edge 50 formed on a universal bail 51 which is pivoted on a horizontally extending shaft 52 suitably supported in the side frames of the machine. Levers 46, through the cooperation of bail 51 with the extremity of each of the arms 48, are locked either in their clockwise or in their counterclockwise positions between the operating knife-edge 50 and a stop 53 operative in an enlarged hole in each arm 48 of the levers 46. Pivotally connected to each arm 48 of the levers 46 is a punch interference member or punch interponent 54, the extremity of which is slidably carried in slots formed in a comb member 55 (Fig. 2) integrally formed on a cradle 56 which is pivotally carried on a pair of studs such as 57 (Fig. 1). Each of the interponents 54 is provided with an enlargement at its free end, the purpose of which is to cooperate with an associated punch 58, as determined by the position of its associated arm 48 of its corresponding lever 46. A rod 59 is disposed over the interponents 54 and serves to guide the interponents 54 and to prevent independent upward movement thereof. Comb member 55 is provided with a projection 60 adapted to cooperate with a feed hole punch 35 to perforate invariably a tape-feed hole in the tape for each operation of the perforating mechanism.

Having reference particularly to Fig. 2, the mechanism for operating the punches 58 in accordance with the setting of the interponents 54 will now be described. As shown in the drawings, the main shaft 22 is journaled in anti-friction bearings 61 and 62 mounted in the frame of the apparatus and, as previously described, is rotated from power delivered by motor 23.

Also mounted on shaft 22 is a flanged sleeve 63 to which is secured an operating cam 64 for the signal hole punches 58. Sleeve 63 has a slidable connection with a flanged member 65, a helical spring 66 being interposed between cam 64 and flanged member 65. The tension of spring 66 tends to force longitudinally of shaft 22 a bushing 67 which forms the driven member of a grab clutch 68, the driving member 69 of which is keyed to shaft 22. By this construction rotation of cam 64 is achieved by power communicated from shaft 22 through the elements of grab clutch 68. Normally, cam 64 tends to rotate by power communicated from shaft 22 through a friction clutch 72.

The driven portion 67 of grab clutch 68 is urged during its operative period into mesh with the driving portion 69 by compression spring 66. This tendency, however, is counteracted by a stop lever 70 which coacts with a cam formed on the side of flanged member 65 integral with bushing 67. Lever 70 which is pivoted at 71 is normally urged into cooperative relation with the cam formed on flange 65 by a spring (not shown) and is provided with an arm engaged by a cam formed on the periphery of selector cam barrel 21 in such a manner that at a predetermined point in the cycle of rotation of cam barrel 21, the cam will engage an arm of lever 70 and rotate it against the action of its spring sufficiently to move it free of the cam formed on the side of flanged member 65. Under such circumstances, bushing 67 will rotate by power communicated through clutch 72 and spring 66 will act to move bushing 67 along shaft 22 into engagement with the driving portion 69 of grab clutch 68. Simultaneously with the engagement of the driven and driving portions of clutch 68, operating cam 64 will be rotated. During the single cycle of rotation of clutch 68, the lever 70 will be restored to its operating position with respect to the cam on flanged member 65 by its spring preparatory to coacting again with such cam during the final period of rotation of clutch 68, at which time the driven portion of the clutch 68 will be separated from the driving portion thereof.

Cam 64 coacts with a follower roller 73 mounted at the extremity of one arm of a punch operating bell crank lever 74 which is mounted on a shaft 75 suitably carried in the frame of the ma-

chine. As shown in Fig. 2, lever 74 is provided with an arm 76 which functions to actuate cradle 56 pivotally about its pivots 57. At the extremity of arm 76 an adjustable strut 77 is pivotally articulated, which functions due to its connection with cradle 56 to operate the cradle correspondingly against the action of a spring 78, which has one end attached to cradle 56 and the other end attached to a spring post 79 fixed to the frame of the machine.

For each rotation of cam 64 lever 74 will be rotated with its shaft 75 to oscillate correspondingly arm 76 and move through strut 77 against the action of spring 78 cradle 56 which, due to its operative relation with the interponents 54, will cause their movement to operate correspondingly punches 58. Significant, of course, is the fact that the punches 58 will be operated depending upon the position of the interponents 54. With the interponents 54 in the position shown in Fig. 1 with their enlarged end displaced with respect to the punch pins 58, the five code punch pins 58 will not be operated upon the upward movement of cradle 56 even though the interponents follow the movement of cradle 56. Such operation results due to the fact that the enlarged end of the interponents 54 lies out of the path of its associated punch 58. For each operation of cradle 56 a feed hole punch 35 is operated to perforate a feed hole in the tape.

As is usually provided in apparatus for perforating control strips, the apparatus disclosed in the above-identified drawings includes a pin wheel feed mechanism 30 which, for each oscillation of arm 76 of lever 74, is rotated through a suitable pawl and ratchet mechanism to advance the tape, through its cooperation with the feed holes, to present an unperforated area in alignment with the code punches 58. Details of the tape feed mechanism are fully disclosed in Patent No. 2,042,788, granted June 2, 1936, to Howard L. Krum, and reference should be had to such patent for a detailed description of this particular mechanism.

During each oscillation of cradle 56, locking bail 51 is operated, for, as cradle 56 is swung upwardly, mechanism operates to allow bail 51 under the action of spring 81, Fig. 3, to rotate about its pivot. Proper timing of the movement of bail 51 is regulated by suitable mechanism of the construction disclosed in the aforementioned patent of Howard L. Krum.

Incidentally, the punches 58 are spring returned and are operatively mounted in a punch block, as disclosed in Fig. 2 and as described in greater detail in the Howard L. Krum patent previously referred to.

Also mounted on the shaft supporting levers 46 is a further lever 82, Fig. 4, which has an arm 83 to which is fixed a rod 84 cooperating with each of the arms 48 of each of the levers 46. In response to the predetermined positioning of levers 46, lever 82 will, through its rod 84, be correspondingly positioned to cause corresponding movement of its associated interponent 85 which, as shown in Figs. 1 and 3, has its enlarged end offset with respect to the enlarged ends of the other interponents 54 to operate correspondingly its punch 86, Fig. 2. For example, with the interponents 54 in the position shown in Fig. 1 and with the interponent 85 in the position shown in such figure, only the punch 86 will be operated to perforate the tape upon the upward movement of cradle 56. In the other position of interponent 85, punch 86 will not be operated. Consequently, with the interponents 54 set in an all-spacing position, lever 82 will follow such movement due to the cooperation of rod 84 of arm 83 with each of the arms 48. When so positioned, its interponent 85 will be positioned with respect to its punch 86 to perforate the tape upon the operation of cradle 56. If any of the arms 48 of levers 46 is in a marking position, then lever 82 through the cooperation of rod 84 with such arm 48 will be moved correspondingly and its interponent 85 will be positioned such that its punch 86 will not be operated upon operation of cradle 56. With such an arrangement the tape may be perforated with a particular perforation for the purpose of controlling electrical circuits which will be referred to hereinafter.

Electrical contact operation

Pivotally mounted on rod 88 are a plurality of levers 89, each of which is provided with a spring 90 which has one end secured to an arm of lever 89 and the other end secured to a spring post 91. Individual to each of the levers 89 is a set of contact springs 92 which are shown diagrammatically in Fig. 7. The purpose of contact springs 92 will be described later. Cooperating with each of the levers 89 is an arm 49 of levers 46. Through such cooperation the corresponding lever 89 is permitted to rotate in a counterclockwise direction, as viewed in Fig. 1, under the tension of its spring 90 and cause the corresponding operation of contacts 92; that is, when rotated in a counterclockwise direction, lever 89 permits the opening of a contact and the closure of another contact.

Also mounted on rod 88 is a lever 93 which is not associated with an arm of a lever 46 but which is, as described for levers 89, spring urged in a counterclockwise direction to operate its associated contact springs 94. Regardless of the position of levers 46, lever 93 will be operated for operating invariably its associated contacts 94.

Common to the levers 89 and lever 93 is a bail 95 mounted between the extensions 96 and 97 of a lever 98, Fig. 3, secured to shaft 75 and oscillated therewith upon rotation of cam 64. Normally, lever 98 occupies the position shown in Fig. 1 and holds levers 89 and 93 against the tension of their individual springs in the position shown in Fig. 1 to operate their contacts correspondingly. Bail 95 holds such levers 89 out of engagement, when in its normal position, with their arm 49 of lever 46. For each operation of lever 74, lever 98 will be oscillated first to permit levers 89 to assume positions depending upon the position of arms 49 and to operate lever 93 through which contacts 94 are operated and to restore levers 89 against the tension of springs 90 to their normal position or the position shown in Fig. 1. From the foregoing description it is apparent that levers 89 assume positions depending upon the position of their associated arm 49; that is, with the arm 49 in a spacing position or the position shown in Fig. 1, its contacts 92 will remain in the position shown in Fig. 1 even though bail 95 is moved free of levers 89. However, with arm 49 in a marking position and with bail 95 moved free of lever 89, its spring 90 will rotate such lever about its pivot 88 sufficiently to open normally closed contacts of contacts 92 and close the normally open contacts of such contacts 92.

As disclosed in Fig. 5, selector cam drum 21 is driven through a friction clutch 27 and is normally held against rotation due to the engagement of an arm 102 secured thereto with an arm

of a stop lever 103 which is pivoted on a rod 104. Engaging an arm of lever 103 is the offset end of a lever 105 pivoted at 106 and rotated in a counterclockwise direction, as viewed in Fig. 5, by a spring 107 into engagement with the vertically extending arm of lever 103. Rotation of lever 105 in a clockwise direction against the tension of its spring 107 results from the rotation of pivoted lever 108 in response to the movement of pin 109 which is operated by armature 33 of electromagnet 32. Normally, electromagnet 32 is energized and consequently, pin 109 is held free of pivoted lever 108 and the horizontally extending arm of lever 103 lies in the path of stop arm 102 of the selector cam barrel 21. Cam barrel 21 is, under such conditions, held against rotation.

Upon the de-energization of electromagnet 32 in response to a spacing signal indicative of the start impulse of a start-stop printing telegraph system, pin 109 will rotate lever 108 in a counterclockwise direction, as viewed in Fig. 5, to rotate lever 105 against the tension of its spring 107 and free lever 103 to respond to the action of its spring, whereupon the horizontal arm of lever 103 is moved free of stop arm 102 to permit rotation of selector cam barrel 21 by power communicated through friction clutch 27. Cam barrel 21 rotates and in its rotation its cams 29 engage successively lever 16 to rock the swords 11 to bring the abutments 42 or 43 into operative relation with extensions 40 and 41 of arm 39 secured to armature 33 of electromagnet 32. Swords 11 will be set in accordance with the marking and spacing signals received during the rotation of selector cam barrel 21. Upon the receipt of the stop impulse, electromagnet 32 will be energized and lever 103 will be positioned such that its horizontal arm lies in the path of stop arm 102. Consequently, selector cam barrel 21 will be arrested at the end of its cycle of rotation.

Release of the selector cam barrel 21 may also be controlled by a member 112 slidably supported through screw and slot connections 113 and 114 to the frame of the machine. Member 112 is normally held in its vertical or upward position by a spring 115 which has one end secured to a projection 116 and the other end secured to a fixed spring post. The lower extremity of member 112 is beveled as shown in Fig. 5. When depressed, the lower extremity of lever 112 engages lever 108 to cause rotation of lever 105 and correspondingly the rotation of lever 103. Such operation will, as was described in connection with the de-energization of electromagnet 32, cause the release of selector cam barrel 21.

Release of cam barrel 21 can thus be achieved either in response to a signaling impulse which energizes electromagnet 32 or the manual depression of member 112. When selector cam barrel 21 is released in response to the depression of member 112, the mechanism will be operated to establish an all-marking condition of the interponents 54 to perforate an all-marking or letters code combination of perforations in the tape. However, under such conditions, interponent 85 will not be in a position in alignment with its punch 86 so that for each operation of cradle 56, the tape will not be perforated in this position. Also, for each operation of the cradle 56, the feed hole punch 35, previously referred to, will be operated to perforate a series of feed holes in the tape.

Under certain conditions of operation, remote control of member 112 is desired. To provide such control, the mechanism disclosed herein embodies an electromagnet 117, Fig. 6, the armature of which is secured to a rod 118 which is journaled in the frame of the machine and which has secured to it an arm 119. Arm 119, as disclosed in Figs. 1 and 6, engages a roller 120 secured to the back side of member 112. Normally, electromagnets 117 are de-energized and thus member 112 is held in its vertical position by its spring 115. Upon the energization of electromagnets 117, rod 118 will be rotated counterclockwise, as viewed in Fig. 6, member 112 will be depressed against the tension of its spring 115, and selector cam barrel 21 will be released for rotation in a manner identical to that previously described upon the manual depression of member 112. For each rotation of selector cam barrel 21, the cradle 56 will be oscillated through lever 76 to operate the feed hole punch 35 and punches 58. Rotation of selector cam barrel 21 energized. Upon the de-energization of electromagnets 117, spring 115 restores member 112 to its normal position and lever 103 is restored to its normal position wherein its horizontal arm continues as long as electromagnetis 117 remain lies in the path of stop arm 102. Selector cam barrel 21 will thus be arrested at the end of its cycle of rotation.

The structure previously described is especially adaptable for use in a system of the character disclosed and described in application Serial No. 248,426, filed December 30, 1938, in the names of W. M. Bacon and E. F. Watson. Fig. 7 shows schematically the adaptation of the perforating and contact operating apparatus described herein with a signaling system of the form generally disclosed in the cited Bacon et al. application.

As disclosed in Fig. 7, the rectangle 122 represents diagrammatically the apparatus previously described in detail and the rectangle 123 represents diagrammatically a start-stop transmitter which includes a plurality of contacts 124 set in accordance with the code perforations in a tape 125 which is prepared by passing it through the reperforator disclosed in Figs. 1 to 6, inclusive, and a brush type distributor 126. The distributor 126 includes a plurality of arcuately arranged segments and a brush arm which is secured to a shaft 127 driven from a motor 128 through a friction clutch 129 and suitable gearing. An electromagnet 130 operates on a stop arm 131 which engages a stop lug 132 secured to the end of shaft 127 normally to hold shaft 127 against rotation. In response to energization of electromagnet 130, arm 131 will be moved free of stop lug 132 and shaft 127 will be released for rotation.

In addition to contacts 124, there is a further contact 133, the sensing element of which responds to the perforation inserted through the operation of punch 86 to control the energization of electromagnet 134, which corresponds to electromagnet 117 of the system disclosed in the afore-mentioned copending application and which performs a function similar to that of such relay.

Intermediate the perforator 122 and the transmitter 123 is a rod or arm 135 which responds to the condition of the tape 125 intermediate the perforator and transmitter to control contacts 136. When the tape 125 between the perforator 122 and the transmitter 123 becomes taut, contacts 136 will be opened and consequently relay 137 will be de-energized to open the energizing circuit of start magnet 130.

The perforator 122, as shown diagrammatically

in Fig. 7, embodies a receiving electromagnet 32 and tape-out electromagnet 117 which serve to control the operation of swords 11 and member 112, respectively. In response to the energization of electromagnet 32, the interponents 54 will be positioned, the code punches 58 will be operated in response to the oscillation of cradle 56 to perforate the tape 125 correspondingly, and the contacts 92 and 94 will be operated, the former contacts in accordance with the position of arms 49 of each of the levers 46. However, for each operation of bail 95, contact 94 will be operated, which is common to the other contacts and which, as disclosed in Fig. 7, functions to control the application of battery to the contacts 92 through contacts of relays disclosed in the cited copending application of Bacon et al. Responsive to the operation of lever 82 when the levers 46 are in an all-spacing position, contacts 138, Figs. 3 and 7, will be operated to perform their particular control function.

While the invention has been disclosed and described with regard to particular apparatus, it is obvious that various modifications may be made thereto without departing from the spirit and scope of the invention as defined in the appended claims.

What is claimed is:

1. A telegraph machine including an electromagnet, a selector mechanism controlled by said electromagnet, elements set in accordance with the operation of the selector mechanism, a recording mechanism controlled by said elements for recording the operations of said electromagnet, a member in juxtaposition to said elements having a rod extending transversely of said elements and operated by said elements, and a recording mechanism controlled by said members when said elements are all in a predetermined position to record a particular condition.

2. A telegraph machine including an electromagnet, a selector mechanism controlled by said electromagnet, elements set in accordance with the operation of the selector mechanism, a recording mechanism controlled by said elements for recording the operations of said electromagnet, a member in juxtaposition to said elements having a rod extending transversely of said elements and operated by said elements, a recording mechanism controlled by said member when said elements are all in a predetermined position through the coaction with said rod to record a particular condition, a plurality of electrical contacts, and means controlled by said elements for operating said contacts correspondingly.

3. A telegraph machine including an electromagnet, a selector mechanism controlled by said electromagnet, elements set in accordance with the operation of the selector mechanism, a punch pin interponent individual to each of said elements and responsive thereto, power driven means for operating the punch pin interponents to perforate a tape, a plurality of electrical contacts one individual to each of said elements, and a bail operated by said power operated means for normally maintaining said contacts in a predetermined electrical condition.

4. A telegraph machine including an electromagnet, a selector mechanism controlled by said electromagnet, elements having a plurality of arms set in accordance with the operation of the selector mechanism, a punch pin interponent individual to an arm of each of said elements and responsive thereto, power driven means for operating the punch pin interponents to perforate a tape, a plurality of electrical contacts, a pivoted lever individual to each of said contacts and cooperating with an arm of its corresponding element, and a bail operated by said power operated means for cyclically freeing said pivoted levers whereby said levers assume positions in accordance with the position of said elements and operate the electrical contacts correspondingly.

5. A telegraph machine including an electromagnet, a selector mechanism controlled by said electromagnet, a tape perforating mechanism controlled by said selector mechanism, a plurality of electrical contacts, means controlled permissibly by said perforating mechanism for operating certain of said contacts in permuted combinations, and means operated invariably with the operation of said perforating mechanism to operate another of said contacts simultaneously with the operation of said other contacts.

6. A telegraph machine including an electromagnet, a selector mechanism controlled by said electromagnet, a tape perforating mechanism controlled by said selector mechanism, a plurality of electrical contacts, means operated in timed relation with the operation of said perforating mechanism for controlling the permissive operation of certain of said contacts in permuted combinations, and means operated by said last mentioned means for operating one of said contacts invariably.

7. A telegraph machine including an electromagnet, a selector mechanism controlled by said electromagnet, a tape perforating mechanism controlled by said selector mechanism, a plurality of electrical contacts each having a normally closed position, a further electrical contact having a normally open position, means controlled permissibly by said perforating mechanism whereby said normally closed electrical contacts assume a different electrical condition, and means operated in timed relation with the operation of said perforating mechanism and simultaneously with said means for closing invariably the normally open electrical contact.

8. A telegraph machine including an electromagnet, a selector mechanism controlled by said electromagnet, a recording mechanism controlled by said selector mechanism, mechanically operated means for operating said recording mechanism to record its operations on a tape, a plurality of electrical contacts, means controlled by said recording mechanism for operating said contacts correspondingly upon the predetermined operation of said mechanically operated means, and means operated by said mechanically operated means for operating one of said electrical contacts invariably.

ALBERT H. REIBER.

CERTIFICATE OF CORRECTION.

Patent No. 2,308,543. January 19, 1943.

ALBERT H. REIBER.

It is hereby certified that error appears in the printed specification of the above numbered patent requiring correction as follows: Page 1, first column, line 14, for "resopnsive" read --responsive--; line 30, for "corresopnding" read --corresponding--; page 4, second column, line 20, before the word "energized" insert --continues as long as electromagnets 117 remain--; line 24, strike out "continues as long as electromagnetis 117 remain"; and that the said Letters Patent should be read with this correction therein that the same may conform to the record of the case in the Patent Office.

Signed and sealed this 1st day of June, A. D. 1943

Henry Van Arsdale,
Acting Commissioner of Patents.

(Seal)