(12) PATENT
(19) AUSTRALIAN PATENT OFFICE

(11) Application No. AU 199650536 B2
(10) Patent No. 702273

(54) Title

A compact disposable packing that forms a kit

(51)[6] International Patent Classification(s)

B65D 081/32 B65D 025/08
A45D 034/00 B65D 075/34
A45D 034/04 B65D 075/36
A61F 015/00 B65D 077/08

(21) Application No: 199650536 (22) Application Date: 1996.04.04

(30) Priority Data

(31) Number	(32) Date	(33) Country
95 04243	1995.04.10	FR

(43) Publication Date : 1996.10.24
(43) Publication Journal Date : 1996.10.24
(44) Accepted Journal Date : 1999.02.18

(71) Applicant(s)

Michel Garconnet; Claudine Marie-Christine Garconnet; Armelle Annick Garconnet; Corinne Madeleine Gisele Garconnet

(72) Inventor(s)

Michel Garconnet

(74) Agent/Attorney

SPRUSON FERGUSON,GPO Box 3898,SYDNEY NSW 2001

AU9650536

(12) PATENT ABSTRACT (11) Document No. AU-A-50536/96
(19) AUSTRALIAN PATENT OFFICE

(54) Title
A COMPACT DISPOSABLE PACKING THAT FORMS A KIT

(51)[6] International Patent Classification(s)
B65D 081/32 **A45D 034/00** **A45D 034/04** **A61F 015/00**
B65D 025/08 **B65D 075/34** **B65D 075/36** **B65D 077/08**

(21) Application No. : **50536/96** (22) Application Date : **04.04.96**

(30) Priority Data

(31) Number (32) Date (33) Country
95 04243 **10.04.95** **FR FRANCE**

(43) Publication Date : **24.10.96**

(71) Applicant(s)
MICHEL GARCONNET; CLAUDINE MARIE-CHRISTINE GARCONNET; ARMELLE ANNICK GARCONNET; CORINNE MADELEINE GISELE GARCONNET

(72) Inventor(s)
MICHEL GARCONNET

(74) Attorney or Agent
SPRUSON & FERGUSON , GPO Box 3898, SYDNEY NSW 2001

(57)

The compact disposable packing for kit that contains aiding means which are secured from any contamination comprises a back plate (3) made of plastic material. The back plate (3) is covered with a sheet (4) that forms a resevoir (4a) which opens in a small duct (5) comprising a breakage incipient area (5a). The sheet (4) is itself covered with a hood (8) that delimits a housing (8') for a member like a gauze (6) and similar. The plate (3), the sheet (4) and the hood (8) are tightly assembled and sealed, and the breakage incipient area (5a) is arranged so that the small duct (5) is broken in the housing (8') upon bending the back plate (3) for bringing a fluid contained in the resevoir (4a) to impregnate the member.

A Compact Disposable Packing that Forms a Kit

ABSTRACT

The compact disposable packing for kit that contains aiding means which are secured from any contamination comprises a back plate (3) made of plastic material. The back plate (3) is covered with a sheet (4) that forms a resevoir (4a) which opens in a small duct (5) comprising a breakage incipient area (5a). The sheet (4) is itself covered with a hood (8) that delimits a housing (8') for a member like a gauze (6) and similar. The plate (3), the sheet (4) and the hood (8) are tightly assembled and sealed, and the breakage incipient area (5a) is arranged so that the small duct (5) is broken in the housing (8') upon bending the back plate (3) for bringing a fluid contained in the resevoir (4a) to impregnate the member.

DLG:5419M

S & F Ref: 336360

AUSTRALIA

PATENTS ACT 1990

COMPLETE SPECIFICATION

FOR A STANDARD PATENT

ORIGINAL

Name and Address of Applicant: Michel Garconnet
76510 St. Nicolas
D'Aliermont
FRANCE

Claudine Marie-Christine Garconnet
76510 St. Nicolas
D'Aliermont
FRANCE

Armelle Annick Garconnet
76510 St. Nicolas
D'Aliermont
FRANCE

Corinne Madeleine Gisele Garconnet
Route de Fongueusemare
76280, Criquetot L'Esneval
FRANCE

Actual Inventor(s): Michel Garconnet.

Address for Service: Spruson & Ferguson, Patent Attorneys
Level 33 St Martins Tower, 31 Market Street
Sydney, New South Wales, 2000, Australia

Invention Title: A Compact Disposable Packing that Forms a Kit

The following statement is a full description of this invention, including the best method of performing it known to me/us:-

FIELD OF THE INVENTION

The present invention relates to a multi purpose kit substantially enabling to keep under a small space and secured from air a plurality of products having thereafter to be used together or successively for carrying into effect various actions.

There is a need in the art to provide a kit enabling liquid, pasty and/or solid products to be conditioned in a packing and to be made usable at any time.

There is also a need to provide: that hands of a user cannot come into contact with some of the products, that these products are always secured from contaminations risking to modify properties of the products, and that some of the products so contained are brought together into contact before opening the kit while they remain isolated from other products to which it is possible ulteriorly to have access. It would also be desirable to have a plurality of kits that are connected together for the selling and maintenance thereof while they are used only successively.

A kit as described may find a particularly suitable application in the making of first aid dressings placed in a disposable packing and able to be used in any place both by experienced people and by the general public. Such a kit

can samely be suitable for the conditioning of food products, cosmetic products, cleaning products, and the like.

BACKGROUND OF THE INVENTION

Prior art has already disclosed small cases that form kits for first aid interventions.

In this respect, FR-A-1 202 852 has disclosed a cover or pocket that contains a liquid, such as a disinfecting liquid as well as an applicator for example a cotton-wool pad, a portion that contains the liquid being spaced apart, from a portion that contains the cotton-wool pad, by a closing member which can be ejected by pressure. The small cover or pocket comprises one side with a breakage incipient area that can be torn for having access to the pad which can be taken by the user with his/her fingers.

The known device protects both the liquid and the pad as long as this device is not open, but the device necessitates that the pad, once impregnated with the liquid, is taken with fingers, which can cause a contamination of the pad by various exterior agents.

US-A-2 377 117 discloses a first aid kit that is similar to a fountain-pen within which is placed a supply of a liquid

contained in a reservoir closed by a spongy like tip. A roll of a self-adhesive bandage is, moreover, also arranged within the body of the pen shaped kit.

In the above known embodiment, the spongy-like tip can obviously be submitted to contamination, and the same is true for the wrapped bandage.

US-A-3 964 604 discloses a flexible packaging bag that delimits a mixing chamber and at least one reservoir chamber which can communicate together through an opening of a breakage area.

This publication does not show any elements for constituting a dressing so that the products able to be mixed together cannot prevent a possible contamination of a pad of cotton-wool, gauze or other material having to be impregnated.

DE-C-1 087 758 discloses a roller for delimiting successive segments that respectively contain spongy-like pads, and flasks that contain impregnation liquids. In this case also, at least the spongy-like pads can be submitted to contaminations.

FR-A-1 111 282 discloses a small case that delimits two compartments, one compartment for an ampulla that contains a disinfecting liquid and another compartment for a self-adhesive dressing. When the small case is open, both the ampulla and the dressing must be taken by the user with his/her fingers, which generates a risk of contamination at least of the dressing.

PURPOSE OF THE INVENTION

It is the object of the present invention to overcome or substantially ameliorate at least one of the above disadvantages.

SUMMARY OF THE INVENTION

There is disclosed herein a dispensable packing including: a back plate made of plastics material; a sheet forming a reservoir being attached to the back plate, the reservoir including a duct with a breakage section; a hood forming a housing for a member such as a gauze, the hood being attached to the sheet; and wherein said duct is adapted such that said breakage section is broken upon bending said back plate for bringing a fluid contained in said reservoir to impregnate said member.

Preferably, said hood further forms a second housing substantially covering said reservoir.

Preferably, an inner wall of a portion of said hood that forms said housing comprises graphical signs.

Preferably, the packing further includes a self-adhesive film being attached to said back plate on a face opposite to that on which said sheet is attached, a self-adhesive sheet being attached to said self-adhesive film for protecting a covering means of the dressing type which is accessible by peeling off said self-adhesive sheet, with directions of use being carried by self-adhesive sheet.

Preferably, said self-adhesive flexible film and said self-adhesive sheet are provided with ends, with said ends projecting beyond said back plate and said sheet and said hood are sealed by means of a glue, a solder or similar.

Preferably, said housing has an upper wall provided with a plug for maintaining said member.

Preferably, said plug is maintained on said upper wall by an edge.

Alternatively, said plug is formed by said upper wall of said housing, and wherein a further breakage section is formed around said plug.

Preferably, said plug has bellows shaped side walls.

Preferably, at least said hood is made of clear plastic material.

BRIEF DESCRIPTION OF THE DRAWINGS

A preferred form of the present invention will now be described by way of example only, with reference to the accompanying drawings, wherein:

Fig. 1 is a top view of a complete packing that forms a kit;

Fig. 2 is a bottom view of the kit of Fig. 1;

Fig. 3 is a side view of the kit;

Fig. 4 is an exploded side view of the kit.

DETAILED DESCRIPTION OF THE PREFERRED EMBODIMENT

In the following disclosure, the kit is described as a packing for first aid dressing, without however been limited

to such an embodiment.

In the drawings, a flexible film 1a of a bag 1 having a generally rectangular shape is covered with a coating of a synthetic adhesive 2 on at least its face that is upwardly directed.

The adhesive coated surface of the flexible film 1a is made adhering with a back plate 3. The part 3a of the back plate 3 which is shown at right hand of the drawing, is opposite to a reservoir 4a containing an active product which generally is a liquid or a more or less viscous fluid.

A plurality of disinfecting products may be convenient as active product.

The reservoir 4a is delimited by a sheet 4 made of a rigid plastic material which is compatible with that forming the back plate 3 for enabling a tight connection therewith by soldering or any other suitable means.

The reservoir 4a is extended by a small duct 5 formed as the reservoir 4a by an upper part of the back plate 3 that forms the bottom portion of the reservoir 4a.

The small duct 5 is provided, in a part of its wall formed by the sheet 4, with a breakage incipient area 5a for facilitating an opening of the small duct 5.

A pad 6 or other applicator, made of gauze or an other product which can be shredded or is able to be rolled, pleated or bent in any other appropriate shape, is arranged on a top portion of the back plate 3.

The pad 6, as well as both the reservoir 4a and the small duct 5 are covered with a hood 8 of a clear plastic material preferably of a same kind as that forming the sheet 4, this hood 8 delimiting a frame 8a covering a periphery of the sheet 4.

The hood 8 delimits a housing 8_1 for covering the reservoir 4a, and a housing 8_2 for covering the pad 6.

As shown in the drawings, it is advantageous that the housing 8_2 has an opening 8' for a plug 7 having an edge 7a bearing on a bottom portion of an upper part of the housing 8_2, as illustrated in Fig. 3.

The plug 7 is a hollow plug and is filled by the pad 6 which maintains the edge 7a on the lower wall of the housing 8_2,

thereby ensuring a suitable tightness between these two members.

As this is diagrammatically illustrated in Figs. 3 and 4, the plug 7 has possibly a bellows shaped side wall 7_2 for permitting a possible deformation thereof.

The width of the edge 7a of the plug 7, which is made in a flexible plastic material similar to that of the hood 8, is small for enabling a possible extraction of this plug, as this is explained hereinafter.

It is also possible, without departing from the scope of the invention, that the plug 7 is formed integrally with the wall of the housing 8_2, and that the edge 7a is substituted by a breakage incipient area similar to the breakage incipient area 5a.

It is also possible, for ensuring a full tightness between the wall of the housing 8_1 and the plug 7, that the edge 7a is connected to the wall of the housing 8_2 by a seal tightness material, such as a wax material.

The housing 8_1 which covers the reservoir 4a is advantageous-

ly used for showing graphical signs that are printed on an inner wall of the housing 8_1. These graphical signs can for example give an information about a reference of a manufacturing batch, a time limitation date or other information which are thus made indelebile since they are not accessible from the outside.

As this is shown from the above description, the various members as above described, except the pad 6, are made of plastic material, this plastic material being preferably a clear plastic material at least for the making of the hood 8 in order that the above mentioned graphical signs are clearly readable and that the pad 6 as well as the product contained in the reservoir 4a can easily be seen.

The connection between the hood 8, the back plate 3 and the sheet 4 is made by glueing or by soldering, or by any other suitable means appropriate to the art of the material used for making these parts.

The bag 1 is prepared separately by placing, in a known manner, a dressing 10 or an other covering means on the flexible film 1a and by covering this dressing and the flexible film 1a with a self-adhesive sheet 11, the visible lower face of which being provided with information about directions of use.

Preferably, both the flexible film 1a and the self-adhesive sheet 11 covering the dressing 10 will project beyound the back plate 3 as shown at 1b and 11a in the drawings.

When it is desired to use the dressing, the small duct 5 is broken along the breakage incipient area 5a by bending the back plate 3, the sheet 4 and the hood 8 between the housings 8_1 and 8_2, which makes that the liquid or semi-liquid active product contained in the reservoir 4a will impregnate the pad 6. Flowing of the active product is accelerated by pressing the reservoir 4a between fingers.

When the pad 6 is impregnated, the plug 7 is extracted by pressing it between fingers, which has for its effect to withdraw in the same time the pad 6 which can be used for cleaning and disinfecting a wound without the pad being into contact with fingers and, consequently, without this pad having been submitted to any contamination since it remains within the plug 7. Maintaining the pad 6 within the plug 7 is still improved when the plug 7 comprises a bellows shaped edge 7_2 .

A similar use of the pad 6 maintained within the plug 7 is obtained when a pre-breakage line is provided in the wall of the housing 8_2.

After a cleaning of the wound, the self-adhesive sheet 11 of the bag 1 is peelled off, which permits an application of the dressing 10 on the wound without the dressing 10 having been itself into contact with fingers of a user.

This obviates also any contamination of the dressing 10.

The ends 1b, 11a of the sheets that constitute the bag 1 facilitate a handling of the dressing, and samely the glueing of the flexible film 1a on the back plate 3 facilitates the handling of the dressing, this back plate 3 forming a relatively rigid support for the bag 1 as long as the sheet 11 is not peelled off.

The invention is not restricted to the embodiment shown and described in detail since various modifications thereof can be applied thereto without departing from its scope as shown in the appendant claims.

The claims defining the invention are as follows:

1. A dispensable packing including:

a back plate made of plastics material;

a sheet forming a reservoir being attached to the back plate, the reservoir including a duct with a breakage section;

a hood forming a housing for a member such as a gauze, the hood being attached to the sheet; and

wherein said duct is adapted such that said breakage section is broken upon bending said back plate for bringing a fluid contained in said reservoir to impregnate said member.

2. The packing as set forth in claim 1, wherein said hood further forms a second housing substantially covering said reservoir.

3. The packing set forth in claim 2, wherein an inner wall of a portion of said hood that forms said housing comprises graphical signs.

4. The packing as set forth in claim 1, further including a self-adhesive film being attached to said back plate on a face opposite to that on which said sheet is attached, a self-adhesive sheet being attached to said self-adhesive film for protecting a covering means of the dressing type which is accessible by peeling off said self-adhesive sheet, with directions of use being carried by self-adhesive sheet.

5. The packing as set forth in claim 4, wherein both said self-adhesive flexible film and said self-adhesive sheet are provided with ends, with said ends projecting beyond said back plate and said sheet and said hood are sealed by means of a glue, a solder or similar.

6. The packing as set forth in claim 1, wherein said housing has an upper wall provided with a plug for maintaining said member.

7. The packing as set forth in claim 6, wherein said plug is maintained on said upper wall by an edge.

8. The packing as set forth in claim 6, wherein said plug is formed by said upper wall of said housing, and wherein a further breakage section is formed around said plug.

9. The packing as set forth in claim 6, wherein said plug has bellows shaped side walls.

10. The packing as set forth in claim 1, wherein at least said hood is made of clear plastics material.

11. A packing substantially as hereinbefore described with reference to the accompanying drawings.

DATED this Twenty-first Day of December 1998

Michel Garçonnet

Claudine Marie-Christine Garçonnet

Armelle Annick Garçonnet

Corinne Madeleine Gisele Garçonnet

Patent Attorneys for the Applicants

SPRUSON & FERGUSON

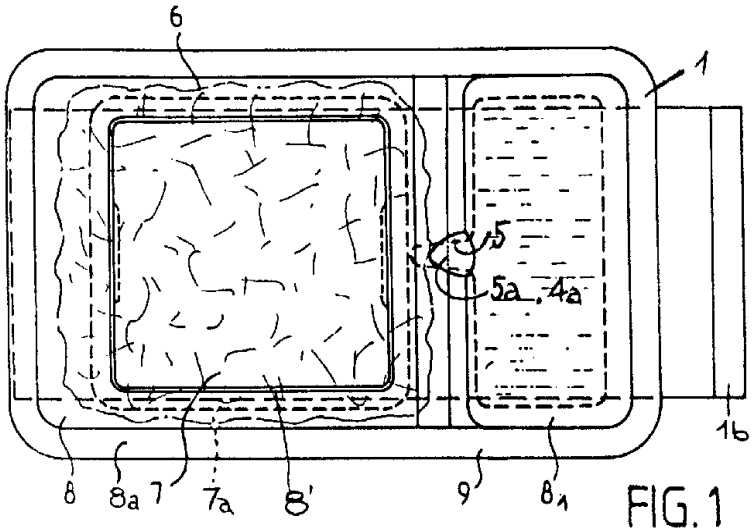

FIG. 1

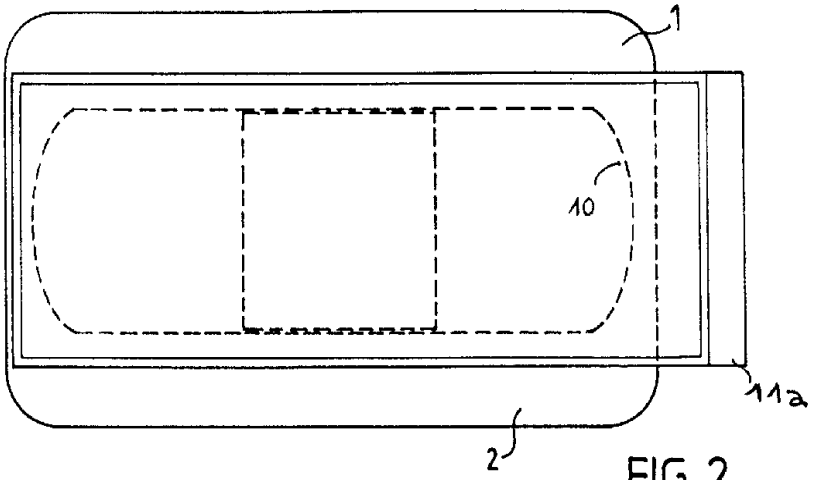

FIG. 2

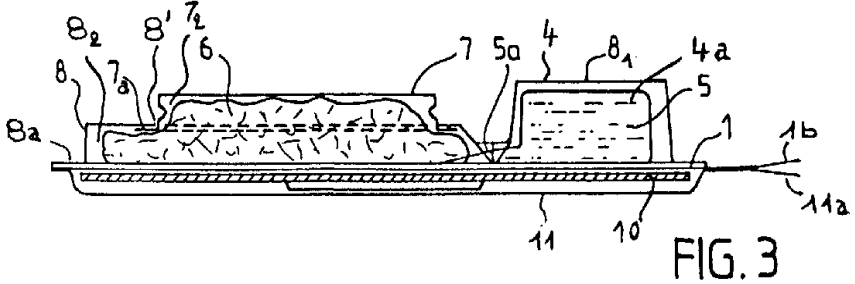

FIG. 3

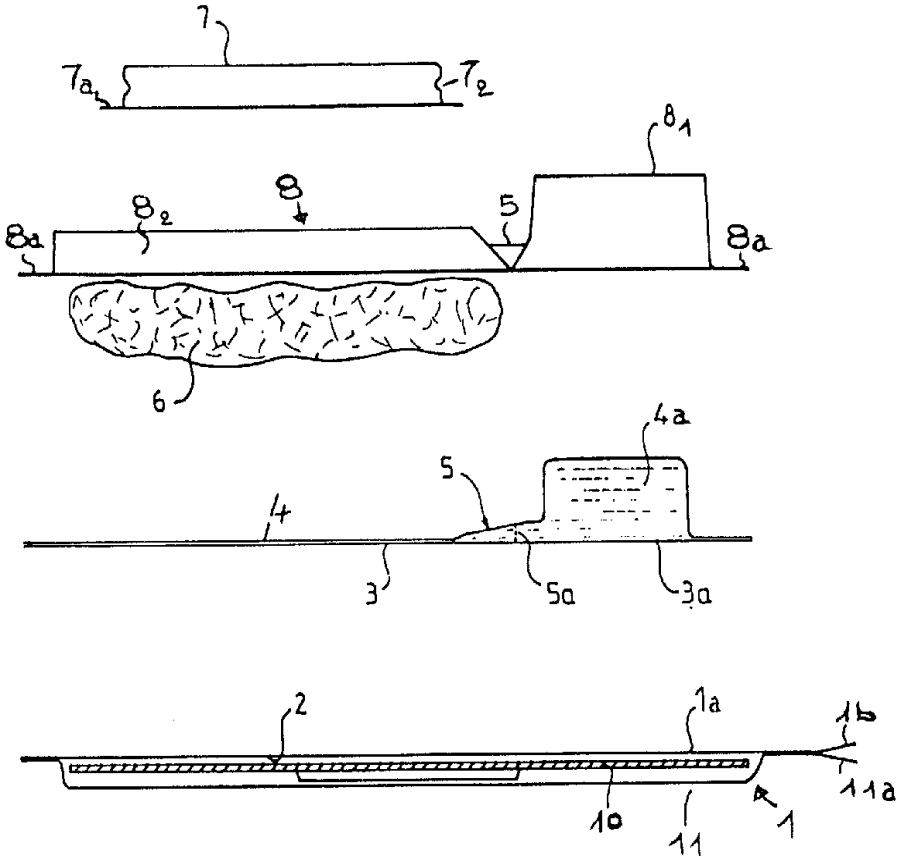

FIG. 4