PCT WORLD INTELLECTUAL PROPERTY ORGANIZATION
International Bureau

INTERNATIONAL APPLICATION PUBLISHED UNDER THE PATENT COOPERATION TREATY (PCT)

(51) International Patent Classification 6 :
G01N 13/00, B01L 7/00

A1

(11) International Publication Number: **WO 95/23329**

(43) International Publication Date: 31 August 1995 (31.08.95)

(21) International Application Number: PCT/US95/00692

(22) International Filing Date: 17 January 1995 (17.01.95)

(30) Priority Data:
08/201,633 25 February 1994 (25.02.94) US

(71) Applicant: DISTEK INC. [US/US]; 208 North Center Drive, North Brunswick, NJ 08902-4246 (US).

(72) Inventors: BRINKER, Gerald; 20 Vetter Court, North Brunswick, NJ 08902 (US). HLADIK, Peter; 8 Thornton Lane, Piscataway, NJ 08854 (US). GUTWILLIG, Alan; 940 Columbus Avenue, Batesville, IN 47006 (US).

(74) Agent: MURRAY, William, H.; Suite 3600, 1600 Market Street, Philadelphia, PA 19103 (US).

(81) Designated States: CA, JP, European patent (AT, BE, CH, DE, DK, ES, FR, GB, GR, IE, IT, LU, MC, NL, PT, SE).

Published
With international search report.

(54) Title: DISSOLUTION TESTING APPARATUS

(57) Abstract

The dissolution testing apparatus (100) has a plurality of stirring elements (104) for stirring the test solutions within a plurality of test vessels (102) with reflective surfaces. The temperatures of the test solutions are individually controlled by a temperature control system. The temperature control system includes a controller (112), a heating element (302) for each test vessel (102) to heat the corresponding test solution, and a temperature sensor (606) for each test vessel (102) to measure the temperature of the corresponding test solution. The heating elements (302) are wrapped around the outside of the test vessels (102) and held in place by spring-loaded heater jackets (304). Each stirring element (104) has a hollow shaft (602), a detachable stirring attachment (e.g., blade (604) or basket (702)), a temperature sensor (606) inside the hollow shaft (602), and a signal transfer device (608) to transmit signals from the temperature sensor (606) to the controller (112). The test vessels (102) are supported and aligned with respect to the stirring elements (104) with a holding plate (118) having openings (1302) and corresponding alignment fixtures (1304).

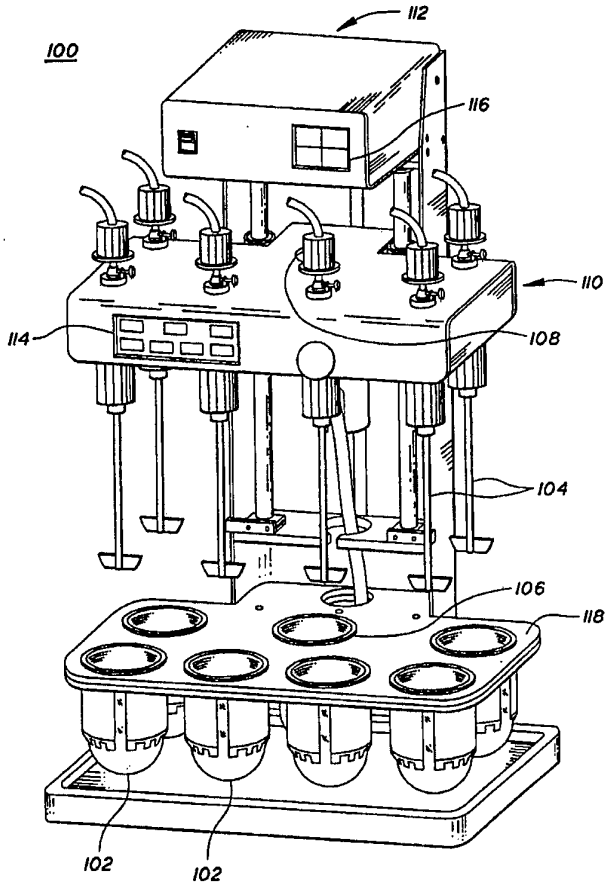

FOR THE PURPOSES OF INFORMATION ONLY

Codes used to identify States party to the PCT on the front pages of pamphlets publishing international applications under the PCT.

AT	Austria	**GB**	United Kingdom	**MR**	Mauritania
AU	Australia	**GE**	Georgia	**MW**	Malawi
BB	Barbados	**GN**	Guinea	**NE**	Niger
BE	Belgium	**GR**	Greece	**NL**	Netherlands
BF	Burkina Faso	**HU**	Hungary	**NO**	Norway
BG	Bulgaria	**IE**	Ireland	**NZ**	New Zealand
BJ	Benin	**IT**	Italy	**PL**	Poland
BR	Brazil	**JP**	Japan	**PT**	Portugal
BY	Belarus	**KE**	Kenya	**RO**	Romania
CA	Canada	**KG**	Kyrgystan	**RU**	Russian Federation
CF	Central African Republic	**KP**	Democratic People's Republic of Korea	**SD**	Sudan
CG	Congo			**SE**	Sweden
CH	Switzerland	**KR**	Republic of Korea	**SI**	Slovenia
CI	Côte d'Ivoire	**KZ**	Kazakhstan	**SK**	Slovakia
CM	Cameroon	**LI**	Liechtenstein	**SN**	Senegal
CN	China	**LK**	Sri Lanka	**TD**	Chad
CS	Czechoslovakia	**LU**	Luxembourg	**TG**	Togo
CZ	Czech Republic	**LV**	Latvia	**TJ**	Tajikistan
DE	Germany	**MC**	Monaco	**TT**	Trinidad and Tobago
DK	Denmark	**MD**	Republic of Moldova	**UA**	Ukraine
ES	Spain	**MG**	Madagascar	**US**	United States of America
FI	Finland	**ML**	Mali	**UZ**	Uzbekistan
FR	France	**MN**	Mongolia	**VN**	Viet Nam
GA	Gabon				

DISSOLUTION TESTING APPARATUS

BACKGROUND OF THE INVENTION

Field of the Invention

The present invention relates to the field of dissolution testing and, in particular, to apparatuses for dissolution testing of pharmaceuticals in solid, semi-solid, or transdermal dosage form.

Description of the Related Art

Dissolution testing and apparatuses for performing such are known in the art. U.S. Patent Nos. 4,279,860 (Smolen) and 4,335,438 (Smolen) provide descriptions of the art of dissolution testing. In general, dissolution testing is used to determine the rate of dissolution of a material in a solution. For example, dissolution testing may be used to determine the rate of dissolution of pharmaceuticals in dosage form in specific test solutions to simulate digestion in a human. The requirements for such dissolution testing apparatuses are provided in United States Pharmacopeia (USP), Edition XXII, Section 711, Dissolution (1990).

Conventional dissolution testing apparatuses have one or more test vessels in which test solutions may be placed. One conventional configuration of a dissolution testing apparatus has, for each test vessel, a basket-type stirring element consisting of a metal shaft with a cylindrical basket at the end. After placing the dosage to be dissolved into the basket, the stirring element is lowered into the test solution near the center of the vessel and rotated at a specified rate (typically measured in revolutions per minute (RPM)) for a specified duration. Samples of the test solutions may be periodically withdrawn from the vessels to determine the degree of dissolution of the dosages as a function of time.

Another conventional configuration of a dissolution testing apparatus has a paddle-type stirring element consisting of a metal shaft with a metal blade at the end. In dissolution testing with this type of apparatus, the stirring element is rotated within the test solution with the dosage at the bottom of the vessel.

In either conventional configuration, the temperature of the test solutions is maintained at the required level (e.g., 37 degrees centigrade) by placing the test vessels in a water bath. The temperature of the water bath is typically controlled by an external water pump/heater which continually recycles water between the water bath and the pump/heater. The temperature of a test solution within one of the test vessels may be measured directly by inserting a thermometer into the test solution or indirectly by measuring the temperature of the water bath, either in the water bath itself or within the water pump/heater. Direct temperature measurement of the test solutions is not

permitted during the actual dissolution testing procedure. As a result, only indirect temperature measurements are available during the testing procedure.

Conventional dissolution testing apparatuses have a number of problems. As just discussed, conventional apparatuses do not support direct measurement of test solution temperatures during testing procedures. Moreover, since all test vessels of a dissolution testing apparatus are placed within the same water bath, the temperatures for all test solutions for a specific testing procedure are the same. In addition, water baths have problems related to leaking, evaporation, and algae growth. As a result, water baths must be emptied, cleaned, and refilled periodically. Furthermore, the time required to heat test solutions using conventional water bath dissolution testing apparatuses is long -- typically 30 to 45 minutes.

What is needed is an improved dissolution testing apparatus that eliminates or reduces the problems associated with conventional apparatuses.

It is accordingly an object of this invention to overcome the disadvantages and drawbacks of the known art and to provide improved apparatuses for dissolution testing.

It is a further object of this invention to provide a dissolution testing apparatus that does not rely upon a water bath to control the temperature of the test solutions in one or more test vessels.

It is another object of this invention to provide a dissolution testing apparatus that provides for direct measurement of test solution temperature during actual dissolution testing procedures and still conform to the USP dissolution test requirements.

It is yet another object of this invention to provide a dissolution testing apparatus that reduces the time required to heat the test solutions to the desired levels for dissolution testing.

Further objects and advantages of this invention will become apparent from the detailed description of a preferred embodiment which follows.

SUMMARY OF THE INVENTION

The present invention is an apparatus for dissolution testing of a material in a test solution within a test vessel. According to a preferred embodiment, the apparatus comprises (a) a stirring element for stirring the test solution; (b) a heating element placed around the outside of the test vessel for heating the test solution; and (c) a controller for controlling the heating element to control the temperature of the test solution.

According to an alternative preferred embodiment of the present invention, the apparatus comprises a stirring element for stirring the test solution. The stirring element comprises (1) a hollow stirring assembly; and (2) a temperature sensor located within the hollow stirring assembly for generating signals representative of the temperature of the test solution.

According to another alternative preferred embodiment of the present invention, the apparatus comprises (a) a test vessel for holding the test solution and the material, wherein the test vessel comprises a reflective surface; and (b) a stirring element for stirring the test solution.

According to yet another alternative preferred embodiment of the present invention, the apparatus comprises a stirring element for stirring the test solution. The stirring element comprises (1) a shaft and (2) a stirring element attachment, adapted to be removably coupled to the shaft.

According to still another alternative preferred embodiment of the present invention, the apparatus comprises (a) a stirring element for stirring the test solution; and (b) a holding plate having at least one opening for receiving and supporting the test vessel. The holding plate comprises a plurality of alignment fixtures for aligning the test vessel with respect to the stirring element.

The present invention is also an apparatus for dissolution testing of a plurality of materials in a plurality of test solutions within a plurality of test vessels. For each test vessel, the apparatus preferably comprises a stirring element for stirring the test solution; a heating element placed around the outside of the test vessel for heating the test solution; a heater jacket surrounding the heating element for holding the heating element in place around the test vessel; and a controller. Each stirring element comprises (1) a hollow shaft; (2) a stirring element attachment, adapted to be removably coupled to the hollow shaft, wherein the stirring element attachment is one of a blade attachment and a basket attachment; (3) a temperature sensor located within the hollow shaft for generating signals representative of the temperature of the test solution when the hollow shaft is inserted into the test solution; and (4) a signal transfer device for transmitting the signals from the temperature sensor while the stirring element stirs the test solution. The controller controls each heating element to control the temperature of each test solution in accordance with the signals from each temperature sensor. The heater jacket and heating element are configured to permit viewing of the stirring element through the front of the test vessel when the stirring element is inserted into the test vessel. The heater jacket and the heating element are also configured to provide a gap between the outer surface of the heating element and the inner surface of the heater jacket. The heating element has two heating areas with different power ratings.

The present invention is also a test vessel for use with an apparatus for dissolution testing of a material in a test solution, wherein the test vessel comprises a reflective surface.

BRIEF DESCRIPTION OF THE DRAWINGS

Other objects, features, and advantages of the present invention will become more fully apparent from the following detailed description of the preferred embodiment, the appended claims, and the accompanying drawings in which:

Fig. 1 shows a perspective view of a dissolution testing apparatus, according to a preferred embodiment of the present invention;

Fig. 2 is a front view of a test vessel of the apparatus of Fig. 1;

Fig. 3 shows a front view of a test vessel of the apparatus of Fig. 1, configured with a heater assembly;

Fig. 4 shows a front view of a test vessel with an alternative preferred configuration of a heater jacket used to hold the heating element onto the test vessel;

Fig. 5 is a plan view of a heating element of the test vessels of Figs. 3 and 4, before the heating element is wrapped around the test vessel;

Fig. 6 shows an exploded, partial cutaway front view of a paddle-type stirring element of the apparatus of Fig. 1;

Fig. 7 shows an exploded, partial cutaway front view of a basket-type stirring element of the apparatus of Fig. 1;

Figs. 8 and 9 show the assembled paddle-type and basket-type stirring elements of Figs. 6 and 7, respectively, positioned within test vessels for dissolution testing;

Fig. 10 is a process flow diagram for a typical dissolution test using the apparatus of Fig. 1 configured with paddle-type stirring elements;

Fig. 11 is a process flow diagram for a typical dissolution test using the apparatus of Fig. 1 configured with basket-type stirring elements;

Fig. 12 is a circuit block diagram of the controller of the apparatus of Fig. 1; and

Fig. 13 is a plan view of the test vessel holding plate of Fig. 1.

DESCRIPTION OF THE PREFERRED EMBODIMENT(S)

The present invention is directed to a dissolution testing apparatus having a plurality of test vessels and a plurality of stirring elements. The temperatures of the solutions placed in the test vessels for dissolution testing are individually controlled by a temperature control system. The temperature control system includes a controller, a heating element for each test vessel to heat the test solution, and a temperature sensor for each test vessel to measure the temperature of the test solution. In a preferred embodiment, the heating elements are wrapped around the outside of the test vessels and the temperature sensors are placed within the hollow shafts of the stirring elements. In addition, the test vessels preferably have a reflective surface and the stirring elements have interchangeable attachments such as blade and basket attachments.

Referring now to Fig. 1, there is shown a dissolution testing apparatus **100**, according to a preferred embodiment of the present invention. Dissolution testing apparatus **100** has six test vessels **102** and six corresponding stirring elements **104**. A seventh test vessel **106** may be used as an unstirred control vessel during dissolution testing. Apparatus **100** has a port **108** that may optionally be used to configure apparatus **100** with a seventh stirring element corresponding to the seventh test

vessel **106**. The test vessels **102**, **106** are held in place within test vessel holding plate **118**. As shown in Fig. 1, the stirring elements **104** are configured as paddle-type stirring elements.

Dissolution testing apparatus **100** also has a drive system **110** to lower the stirring elements **104** into the test vessels **102** at the start of dissolution testing, to rotate the stirring elements **104** about their shaft axes during dissolution testing, and to raise the stirring elements **104** out of the test vessels **102** at the end of dissolution testing. Such drive systems are known in the art of dissolution testing.

The operations of apparatus **100** are controlled by controller **112**. LCD display **114** preferably has seven fields, one for each test vessel **102**, that may be used to display the current temperature of the test vessel or the current power in watts being used to heat the test vessel. LED display **116** preferably has four fields that may be used to display simultaneously the information related to the following: (1) average test vessel temperature; (2) current stirring element rate (in RPM); (3) elapsed time of dissolution test; and (4) time of next solution sampling.

Referring now to Fig. 2, there is shown a front view of a test vessel **102**, according to a preferred embodiment of the present invention. Test vessel **102** may vary in size from 50-milliliter capacity to 4-liter capacity. The preferred size may be dictated by the appropriate UPS regulations.

Test vessel **102** has a cylindrical portion **202**, a semi-spherical portion **204**, and a flange **206**. The outer diameter (OD) of the flange **206** is preferably greater than the OD of the cylindrical portion **202**. The semi-spherical portion **204** preferably has a reflective coating, such as but not limited to a mirrored coating, to provide test vessel **102** with a reflective surface that inhibits the flow of heat out of the test vessel **102**. Those skilled in the art will understand that the purpose of such a reflective surface is to improve warm-up characteristics and temperature control of the test solution by reducing heat loss from the test vessel and reducing the time required to bring the test solution to the desired temperature.

Referring now to Fig. 3, there is shown a front view of a test vessel **102** of apparatus **100** of Fig. 1, configured with a heater assembly. According to the present invention, test vessel **102** is wrapped with a heating element **302** that is held in place by a spring-loaded stainless steel heater jacket **304**. The configuration of heating element **302** and heater jacket **304** preferably provides a port or opening **306** to permit observation of the test specimen and stirring element **104** during testing. Since heater jacket **304** covers heating element **302**, the only portion of heating element **302** that is visible in Fig. 3 is the part that wraps around the back of the test vessel **102** and is visible through opening **306**. In an alternative preferred embodiment, the heater jacket covers the bottom of the test vessel **102** and the bottom portion of the heater jacket may have a reflective inner surface.

Heater jacket **304** is designed to provide a gap between the outer surface of heating element **302** and the inner surface of heater jacket **304**. The gap permits more accurate temperature control. Heating element **302** is powered and controlled via wiring **308** by controller **112** of Fig. 1.

Referring now to Fig. 4, there is shown a test vessel **102** with an alternative preferred configuration of a heater jacket **402** used to hold the heating element **302** onto test vessel **102**. Heater jacket **402** is a spring-loaded stainless steel open frame that provides a border over the outer edges of heating element **302**. In this embodiment, most of the outer surface of heating element **302** is uncovered and exposed to the air to permit accurate temperature control.

Referring now to Fig. 5, there is shown a plan view of heating element **302** of Figs. 3 and 4, before the heating element is wrapped around test vessel **102**, according to a preferred embodiment of the present invention. Heating element **302** is a flexible resistive heating device such as an etched foil silicone rubber band heater. Heating element **302** has a silicone side and a fiberglass support side. In order to permit easy installation of heating element **302** around test vessel **102**, the low-friction fiberglass side faces the test vessel rather than the high-friction silicone side.

As shown in Fig. 5, heating element **302** has two heating areas with different power ratings: a 100-watt area **502** and a 200-watt area **504**. When wrapped around test vessel **102**, the 100-watt area **502** is closer to the top of test vessel **102** and the 200-watt area **504** is closer to the bottom of test vessel **102**, as indicated in Fig. 5. Heating areas **502** and **504** are powered by controller **112** of Fig. 1 via wiring **308**.

Heating areas **502** and **504** may be configured to be powered at different voltages, such as 115 or 230 volts. Controller **112** is preferably capable of powering heating element **302** at varying power levels from 0 to 300 watts. In addition, 200-watt area **504** has a thermal fuse **506** that trips at a designed temperature limit, such as about 180 degrees Fahrenheit, to prevent a run-away temperature scenario.

In an alternative preferred embodiment of heating element **302**, the controller is capable of powering each heating area independently at varying power levels from 0 to about 100 watts for area **502** and from 0 to about 200 watts for area **504**. Those skilled in the art will understand that, under such an embodiment, when, for example, a 1-liter test vessel **102** is filled with only 500 milliliters of test solution, 100-watt area **502** need not be powered to control the temperature of the test solution.

Those skilled in the art will understand that alternative embodiments of heating element **302** fall within the scope of the present invention. For example, the heating elements may be constructed of different materials such as Kapton®, manufactured by E.I. DuPont de Nemours of Wilmington, Delaware, instead of silicone. In addition, the heating areas **502** and **504** may have power ratings of other than 100 and 200 watts, respectively. In general, heating element **302** may be any device for heating a test solution in a test vessel **102**. For example, heating element **302** may comprise a metal block, such as an aluminum block, with embedded heaters, such as resistive heaters. Heating element **302** specifically is not a water (or other liquid) bath that heats a test solution within a

test vessel by immersing the test vessel in the bath. One purpose of heating element **302** is to eliminate the need for a water bath in dissolution testing apparatuses.

Referring now to Fig. 6, there is shown an exploded, partial cutaway front view of paddle-type stirring element **104** of apparatus **100** of Fig. 1. Paddle-type stirring element **104** comprises hollow shaft **602**, blade **604**, temperature sensor **606**, and signal transfer device **608**. Shaft **602** and blade **604** are appropriately threaded and tapped to permit them to be removably coupled to form a leak-proof seal. In a preferred embodiment, an O-ring seal (not shown) is used, although other types of seals may alternatively be employed. Temperature sensor **606** is located near the bottom of hollow shaft **602** and is preferably in physical thermal contact with the inner surface of shaft **602**. Power to temperature sensor **606** and signals from temperature sensor **606** are transmitted along cable **610**. Cable **610** is in turn electrically coupled to signal transfer device **608** which transfers power and signals between cable **610** and cable **612**. Those skilled in the art will understand that signal transfer device **608** provides transfer of power and signals when stirring element **104** is rotated about shaft axis **614** with respect to cable **612**. Cable **612** is in turn connected to the same controller **112** that controls the power to the heating element **302** of test vessel **102** of Fig. 3.

Referring now to Fig. 7, there is shown an exploded, partial cutaway front view of basket-type stirring element **700**, according to a preferred embodiment of the present invention. Those skilled in the art will understand that dissolution testing may be performed using basket-type stirring element **700** in place of paddle-type stirring element **104** of Fig. 6. Basket-type stirring element **700** is preferably identical to paddle-type stirring element **104**, except that blade **604** of Fig. 6 is replaced by basket **702**. Basket **702** is tapped similarly to blade **604** to permit removable coupling to hollow shaft **602**. As a result, blade **604** and basket **702** are interchangeable attachments to a common shaft **602**.

Each stirring element **104** of apparatus **100** of Fig. 1 may be individually configured to perform dissolution testing as either a paddle-type stirring element or a basket-type stirring element by installing the appropriate blade or basket attachment. Figs. 8 and 9 show the assembled paddle-type and basket-type stirring elements, respectively, positioned within test vessels for dissolution testing.

The sizes, shapes, and materials of test vessel **102** of Fig. 2, shaft **602** and blade **604** of Fig. 6, and basket **702** of Fig. 7 are preferably selected to conform with the appropriate USP regulations. As such, alternative preferred embodiments of those elements are those permitted by USP regulations.

Temperature sensor **606** may be any suitable device for generating signals representative of temperature and is preferably a resistance temperature detector (RTD). It will be understood that, in alternative preferred embodiments, temperature sensor **606** may be other devices such as thermocouple or thermistor devices.

Signal transfer device **608** may be any suitable device for transmitting electrical energy to and from rotating equipment, such as a mercury rotating electrical connector sold by Mercotac Inc. of Carlsbad, California or a slip ring assembly sold by Airflyte Electronics Company of Bayonne, New Jersey.

In an alternative preferred embodiment of the stirring elements of the present invention, each stirring element comprises a hollow shaft with an inner stationary probe. In this embodiment, the probe does not rotate when the shaft is rotated to stir the test solution. Those skilled in the art will understand that an energy transfer device such as a slip ring assembly is not required for this alternative embodiment. As a result, this embodiment avoids any of the possible drawbacks associated with the cost and potentially limited lifetime of slip ring assemblies.

Referring now to Fig. 13, there is shown a plan view of the test vessel holding plate **118** of apparatus **100** of Fig. 1, according to a preferred embodiment of the present invention. Holding plate **118** has seven openings **1302**, one for each test vessel. Each opening **1302** has three alignment fixtures **1304** positioned around the circumference of the opening preferably with about 120 degrees separation. Each alignment fixture **1304** has two alignment arms **1306**, which extend into the area of the opening or just above the opening. The alignment arms **1306** are made of a semi-rigid material, such as PVC plastic.

Holding plate **118** provides at least two functions: (1) supporting the weight of the test vessels and (2) aligning the test vessels under the stirring elements **104**. The flange **206** of a test vessel rests on top of the alignment fixtures **1304**, thereby providing support for the weight of the test vessel. All six centering arms **1306** of the three alignment fixtures **1304** of an opening **1302** are preferably in contact with the OD of the cylindrical portion **202** of the test vessel. Altogether the centering arms **1306** exert compressive forces that tend to center the test vessel within the opening. In this way, the test vessel may be aligned with respect to the corresponding stirring element **104**. Those skilled in the art will understand that the three alignment fixtures provide symmetrical spring forces on the test vessel to align the test vessel and hold it in place during dissolution testing.

Referring now to Fig. 10, there is shown a process flow diagram for a typical dissolution test using apparatus **100** of Fig. 1 configured with paddle-type stirring elements **104**. With the paddle-type stirring elements **104** raised (i.e., not inserted into test vessels **102**), the test vessels **102** are filled with the appropriate test solutions (block **1002** of Fig. 10). The paddle-type stirring elements **104** are then lowered into test vessels **102** and rotated to stir the test solutions (block **1004**). With the paddle-type stirring elements **104** rotating, the test solutions are heated to the specified temperatures using heating elements **302** of Fig. 3 (block **1006**). Controller **112** of apparatus **100** is preferably able to control the temperature of the test solution in each test vessel **102** independently of the other test solution temperatures.

After the desired test solution temperatures have been achieved, the rotation of the paddle-type stirring elements **104** is temporarily stopped (block **1008**) and the dosages are placed at the bottom of the test vessels **102** (block **1010**). The rotation of the paddle-type stirring elements **104** is then resumed at specified rates for specified durations (block **1012**) to begin the actual dissolution testing.

Throughout the dissolution testing procedure, samples of the test solutions may be periodically removed for analysis to determine the degree of dissolution of the dosages (block **1014**). Those skilled in the art will understand that such sampling may be accomplished manually by syringe or pipet or via auxiliary automatic sampling system known in the art.

Referring now to Fig. 11, there is shown a process flow diagram for a typical dissolution test using apparatus **100** of Fig. 1 configured with basket-type stirring elements **700**. Basket-type dissolution testing begins with the stirring elements configured at paddle-type stirring elements **104**. With the paddle-type stirring elements **104** raised (i.e., not inserted into test vessels **102**), the test vessels **102** are filled with the appropriate test solutions (block **1102** of Fig. 11). The paddle-type stirring elements **104** are then lowered into test vessels **102** and rotated to stir the test solutions (block **1104**). With the paddle-type stirring elements **104** rotating, the test solutions are heated to the specified temperatures using heating elements **302** of Fig. 3 (block **1106**).

After the desired test solution temperatures have been achieved, the rotation of the paddle-type stirring elements **104** is temporarily stopped and the stirring elements are raised out of the test solutions (block **1108**). The paddle attachments are then replaced with basket attachments containing the appropriate dosages (block **1110**). The basket-type stirring elements **700** are then lowered into the test vessels **102** and rotated at specified rates for specified durations (block **1112**) to begin the actual dissolution testing.

As in paddle-type dissolution testing, throughout the basket-type dissolution testing procedure, samples of the test solutions may be periodically removed for analysis to determine the degree of dissolution of the dosages (block **1114**).

Throughout both the dissolution test procedures of Figs. 10 and 11, controller **112** independently controls the temperature of each of the test solutions using temperature measurements from temperature sensors **606** and by powering heating elements **302**. Dissolution testing with apparatus **100** may be performed with some of the stirring elements configured as paddle-type stirring elements and other stirring elements configured as basket-type stirring elements. In an alternative preferred embodiment of apparatus **100**, controller **112** may independently control the rate and duration of rotation of each of the stirring elements.

The controller **112** of apparatus **100** simultaneously controls the temperatures of all of the solutions within the test vessels **102**. The controller is preferably a microprocessor-based controller that implements a closed-loop proportional integral derivative (PID) control algorithm using

the signals from the temperature sensors **606** as the feedback signals to control the power to the heating elements **302** to achieve and maintain the desired test solution temperatures for each of the test vessels.

Referring now to Fig. 12, there is shown a circuit block diagram of controller **112** of apparatus **100** of Fig. 1, according to a preferred embodiment of the present invention. Controller **112** has a system controller **1202**, a motor controller **1204**, a sensor controller **1206**, and a heater controller **1208**. Motor controller **1204** controls the operations of the servo motor **1210**, which raises, lowers, and rotates the stirring elements **104**.

Sensor controller **1206** processes the signals received from the shaft-mounted RTD temperature sensors **606** via the signal transfer devices **608** and the RTD signal analog interface **1212**. Sensor controller **1206** also controls the display of the test solution temperatures on liquid crystal display (LCD) device **1214**. LCD device **1214** may also be used to display the power levels to the heating elements **302**. The display is preferably an LCD display but may alternatively be other types of displays such as an LED display.

Heater controller **1208** controls the power distributed to the heating areas of the heating elements **302**. Heater controller **1208** interfaces with system controller **1202** via interface **1216**.

System controller **1202** monitors and controls the operations of motor controller **1204**, sensor controller **1206**, and heater controller **1208**. System controller **1202** also provides the capability to print the dissolution test results (e.g., temperature profiles) for all of the test vessels on a single printer.

Controller **112** is configured with a user-accessible, nonvolatile, removable memory device (such as datakey **1218** of Fig. 12). The system configuration and test setup parameters (e.g., temperatures, stirring element speeds, sampling intervals, infinity RPM, drug name) may be entered into the removable memory device by the user, or the removable device may be supplied pre-configured to the user. The memory device helps achieve consistent test runs by eliminating possible errors in test results caused by improper system setup.

Controller **112** implements a heater safety procedure to turn off the heater elements **302** automatically if a problem arises in the apparatus that could cause a thermal runaway condition. Heater controller **1208** is configured to accept a periodic signal from system controller **1202**. This signal contains on/off control information for each heating element **302**. If a hardware problem occurs that prevents this periodic signal from arriving at heater controller **1208**, or if the normal operation of system controller **1202** is interrupted, then all heating elements **302** are automatically turned off.

Controller **112** also provides heater burnout / sensor open detection. Controller **112** continually monitors the status of each heating element **302** and each temperature sensor **606**. If a problem arises, then appropriate action is taken to prevent a thermal runaway condition. The rate of

change of temperature is detected for each test vessel **102**. If a heating element **302** fails to warm the corresponding vessel **102** to the desired temperature, then appropriate action is taken. Controller **112** also monitors the state of the temperature sensors **606**. If a sensor **606** develops a short, or an open, then appropriate action is taken.

Those skilled in the art will appreciate the advantages of apparatus **100** of the present invention over conventional dissolution testing apparatuses. One advantage is the elimination of the water bath and its associated water pump/heater assembly. This alleviates the problems associated with leaking, evaporation, algae growth, emptying, cleaning, and refilling of the water bath. Moreover, the time required to heat the test solutions to the specified temperatures with apparatus **100** is typically less than that of conventional dissolution testing apparatuses having water baths. Furthermore, the use of a hollow stainless steel shaft **602** instead of the conventional solid stainless steel shaft results in less temperature loss with a cold shaft is inserted into a warm test solution at the start of dissolution testing.

Another advantage of apparatus **100** is that the temperature sensors within the hollow stirring elements provides the capability for direct in situ temperature measurements of the test solutions during test procedures without having to interrupt the test procedures.

Another advantage of apparatus **100** that was mentioned earlier is that the temperature of each test solution may be independently monitored and controlled during a single test procedure. Apparatus **100** may also be configured to perform dissolution testing with paddle-type stirring elements in some test vessels and basket-type stirring elements in other test vessels.

Those skilled in the art will understand that the dissolution testing apparatuses of the present invention may be used to perform dissolution tests on materials other than pharmaceutical dosages.

It will be further understood that various changes in the details, materials, and arrangements of the parts which have been described and illustrated in order to explain the nature of this invention may be made by those skilled in the art without departing from the principle and scope of the invention as expressed in the following claims.

CLAIMS

What is claimed is:

1. An apparatus for dissolution testing of a material in a test solution within a test vessel, comprising:

(a) a stirring element for stirring the test solution;

(b) a heating element placed around the outside of the test vessel for heating the test solution; and

(c) a controller for controlling the heating element to control the temperature of the test solution.

2. The apparatus of claim 1, further comprising a test vessel comprising a reflective surface.

3. The apparatus of claim 1, wherein the stirring element comprises:

(1) a hollow shaft; and

(2) a temperature sensor located within the hollow shaft for generating signals representative of the temperature of the test solution when the hollow shaft is inserted into the test solution, wherein the controller controls the heating element in accordance with the signals from the temperature sensor.

4. The apparatus of claim 3, wherein the stirring element further comprises:

(3) a signal transfer device for transmitting the signals from the temperature sensor to the controller while the stirring element stirs the test solution.

5. The apparatus of claim 1, wherein the stirring element comprises:

(1) a shaft; and

(2) a stirring element attachment, adapted to be removably coupled to the shaft.

6. The apparatus of claim 5, wherein the stirring element attachment is one of a blade attachment and a basket attachment.

7. The apparatus of claim 1, further comprising:

(d) a heater jacket surrounding the heating element for holding the heating element in place around the test vessel.

8. The apparatus of claim 7, wherein the heater jacket and heating element are configured to permit viewing of the stirring element through the front of the test vessel when the stirring element is inserted into the test vessel.

9. The apparatus of claim 7, wherein the heater jacket and heating element are configured to provide a gap between the outer surface of the heating element and the inner surface of the heater jacket.

10. The apparatus of claim 1, wherein the heating element comprises:

(1) a first heating area having a first power rating; and

(2) a second heating area having a second power rating different from the first power rating.

11. An apparatus for dissolution testing of a material in a test solution within a test vessel, comprising:

(a) a stirring element for stirring the test solution, wherein the stirring element comprises:

(1) a hollow stirring assembly; and

(2) a temperature sensor located within the hollow stirring assembly for generating signals representative of the temperature of the test solution.

12. The apparatus of claim 11, further comprising a test vessel comprising a reflective surface.

13. The apparatus of claim 11, wherein the stirring element further comprises:

(3) a signal transfer device for transmitting the signals from the temperature sensor while the stirring element stirs the test solution.

14. The apparatus of claim 11, wherein the hollow stirring assembly comprises:

(1) a hollow shaft; and

(2) a stirring element attachment, adapted to be removably coupled to the shaft.

15. The apparatus of claim 14, wherein the stirring element attachment is one of a blade attachment and a basket attachment.

16. The apparatus of claim 11, further comprising:

(b) a heating element placed around the outside of the test vessel for heating the test solution; and

(c) a controller for controlling the heating element to control the temperature of the test solution in accordance with the signals from the temperature sensor.

17. The apparatus of claim 16, further comprising:

(d) a heater jacket surrounding the heating element for holding the heating element in place around the test vessel.

18. The apparatus of claim 17, wherein the heater jacket and heating element are configured to permit viewing of the stirring element through the front of the test vessel when the stirring element is inserted into the test vessel.

19. The apparatus of claim 17, wherein the heater jacket and heating element are configured to provide a gap between the outer surface of the heating element and the inner surface of the heater jacket.

20. The apparatus of claim 16, wherein the heating element comprises:

(1) a first heating area having a first power rating; and

(2) a second heating area having a second power rating different from the first power rating.

21. An apparatus for dissolution testing of a material in a test solution, comprising:

(a) a test vessel for holding the test solution and the material, wherein the test vessel comprises a reflective surface; and

(b) a stirring element for stirring the test solution.

22. The apparatus of claim 21, wherein the stirring element comprises:

(1) a hollow shaft; and

(2) a temperature sensor located within the hollow shaft for generating signals representative of the temperature of the test solution.

23. The apparatus of claim 22, wherein the stirring element further comprises:

(3) a signal transfer device for transmitting the signals from the temperature sensor while the stirring element stirs the test solution.

24. The apparatus of claim 21, wherein the stirring element comprises:

(1) a shaft; and

(2) a stirring element attachment, adapted to be removably coupled to the shaft.

25. The apparatus of claim 24, wherein the stirring element attachment is one of a blade attachment and a basket attachment.

26. The apparatus of claim 21, further comprising:

(c) a heating element placed around the outside of the test vessel for heating the test solution; and

(d) a controller for controlling the heating element to control the temperature of the test solution.

27. The apparatus of claim 26, further comprising:

(e) a heater jacket surrounding the heating element for holding the heating element in place around the test vessel.

28. The apparatus of claim 27, wherein the heater jacket and heating element are configured to permit viewing of the stirring element through the front of the test vessel when the stirring element is inserted into the test vessel.

29. The apparatus of claim 27, wherein the heater jacket and heating element are configured to provide a gap between the outer surface of the heating element and the inner surface of the heater jacket.

30. The apparatus of claim 26, wherein the heating element comprises:

(1) a first heating area having a first power rating; and

(2) a second heating area having a second power rating different from the first power rating.

31. An apparatus for dissolution testing of a material in a test solution within a test vessel, comprising:

(a) a stirring element for stirring the test solution, wherein the stirring element comprises:

(1) a shaft; and

(2) a stirring element attachment, adapted to be removably coupled to the shaft.

32. The apparatus of claim 31, wherein the shaft is hollow and the stirring element further comprises a temperature sensor located within the hollow shaft for generating signals representative of the temperature of the test solution.

33. The apparatus of claim 32, wherein the stirring element further comprises a signal transfer device for transmitting the signals from the temperature sensor while the stirring element stirs the test solution.

34. The apparatus of claim 31, further comprising a test vessel comprising a reflective surface.

35. The apparatus of claim 31, wherein the stirring element attachment is one of a blade attachment and a basket attachment.

36. The apparatus of claim 31, further comprising:

(b) a heating element placed around the outside of the test vessel for heating the test solution; and

(c) a controller for controlling the heating element to control the temperature of the test solution.

37. The apparatus of claim 36, further comprising:

(d) a heater jacket surrounding the heating element for holding the heating element in place around the test vessel.

38. The apparatus of claim 37, wherein the heater jacket and heating element are configured to permit viewing of the stirring element through the front of the test vessel when the stirring element is inserted into the test vessel.

39. The apparatus of claim 37, wherein the heater jacket and heating element are configured to provide a gap between the outer surface of the heating element and the inner surface of the heater jacket.

40. The apparatus of claim 36, wherein the heating element comprises:

(1) a first heating area having a first power rating; and

(2) a second heating area having a second power rating different from the first power rating.

41. An apparatus for dissolution testing of a material in a test solution within a test vessel, comprising:

(a) a stirring element for stirring the test solution; and

(b) a holding plate having at least one opening for receiving and supporting the test vessel, the holding plate comprising a plurality of alignment fixtures for aligning the test vessel with respect to the stirring element.

42. The apparatus of claim 41, wherein each alignment fixture comprises two semi-rigid alignment arms adapted to provide compressive force to the test vessel.

43. The apparatus of claim 41, wherein the holding plate comprises three alignment fixtures for each opening.

44. The apparatus of claim 41, wherein the stirring element comprises:

(1) a shaft; and

(2) a stirring element attachment, adapted to be removably coupled to the shaft.

45. The apparatus of claim 44, wherein the shaft is hollow and the stirring element further comprises a temperature sensor located within the hollow shaft for generating signals representative of the temperature of the test solution.

46. The apparatus of claim 45, wherein the stirring element further comprises a signal transfer device for transmitting the signals from the temperature sensor while the stirring element stirs the test solution.

47. The apparatus of claim 41, further comprising a test vessel comprising a reflective surface.

48. The apparatus of claim 41, further comprising:

(c) a heating element placed around the outside of the test vessel for heating the test solution; and

(d) a controller for controlling the heating element to control the temperature of the test solution.

49. The apparatus of claim 48, further comprising:

(e) a heater jacket surrounding the heating element for holding the heating element in place around the test vessel.

50. The apparatus of claim 49, wherein the heater jacket and heating element are configured to permit viewing of the stirring element through the front of the test vessel when the stirring element is inserted into the test vessel.

51. The apparatus of claim 49, wherein the heater jacket and heating element are configured to provide a gap between the outer surface of the heating element and the inner surface of the heater jacket.

52. The apparatus of claim 48, wherein the heating element comprises:

(1) a first heating area having a first power rating; and

(2) a second heating area having a second power rating different from the first power rating.

53. An apparatus for dissolution testing of a plurality of materials in a plurality of test solutions within a plurality of test vessels, comprising:

(a) a stirring element for each test vessel, for stirring the test solution, wherein each stirring element comprises:

(1) a hollow shaft;

(2) a stirring element attachment, adapted to be removably coupled to the hollow shaft, wherein the stirring element attachment is one of a blade attachment and a basket attachment;

(3) a temperature sensor located within the hollow shaft for generating signals representative of the temperature of the test solution when the hollow shaft is inserted into the test solution; and

(4) a signal transfer device for transmitting the signals from the temperature sensor while the stirring element stirs the test solution;

(c) a heating element for each test vessel, placed around the outside of the test vessel for heating the test solution, wherein the heating element comprises:

(1) a first heating area having a first power rating; and

(2) a second heating area having a second power rating different from the first power rating;

(d) a heater jacket for each test vessel, surrounding the heating element for holding the heating element in place around the test vessel, wherein the heater jacket and heating element are configured to permit viewing of the stirring element through the front of the test vessel when the stirring element is inserted into the test vessel and wherein the heater jacket and heating element are configured to provide a gap between the outer surface of the heating element and the inner surface of the heater jacket;

(e) a controller for controlling each heating element to control the temperature of each test solution in accordance with the signals from each temperature sensor.

54. A test vessel for use with an apparatus for dissolution testing of a material in a test solution, wherein the test vessel comprises a reflective surface.

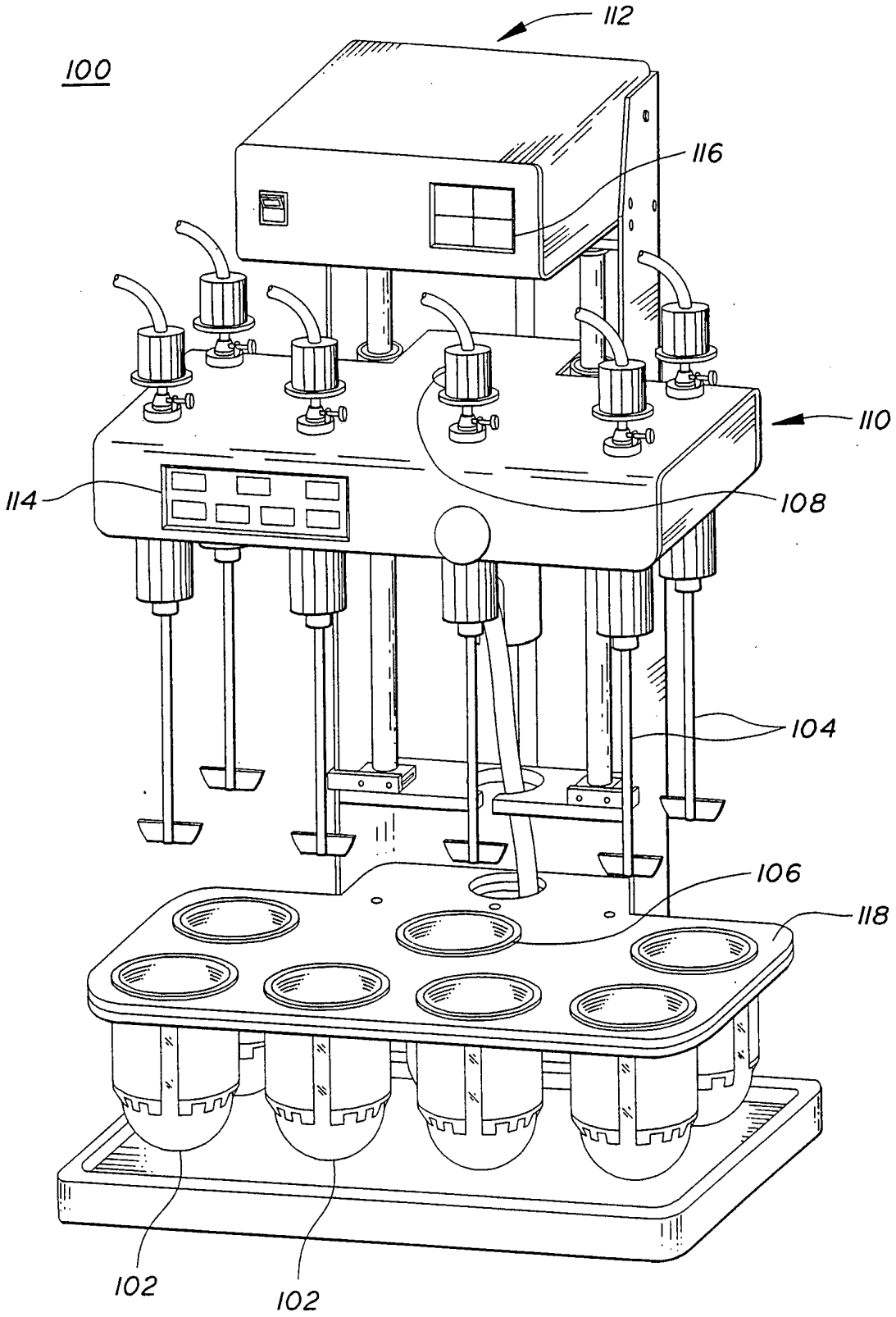

FIG. 1

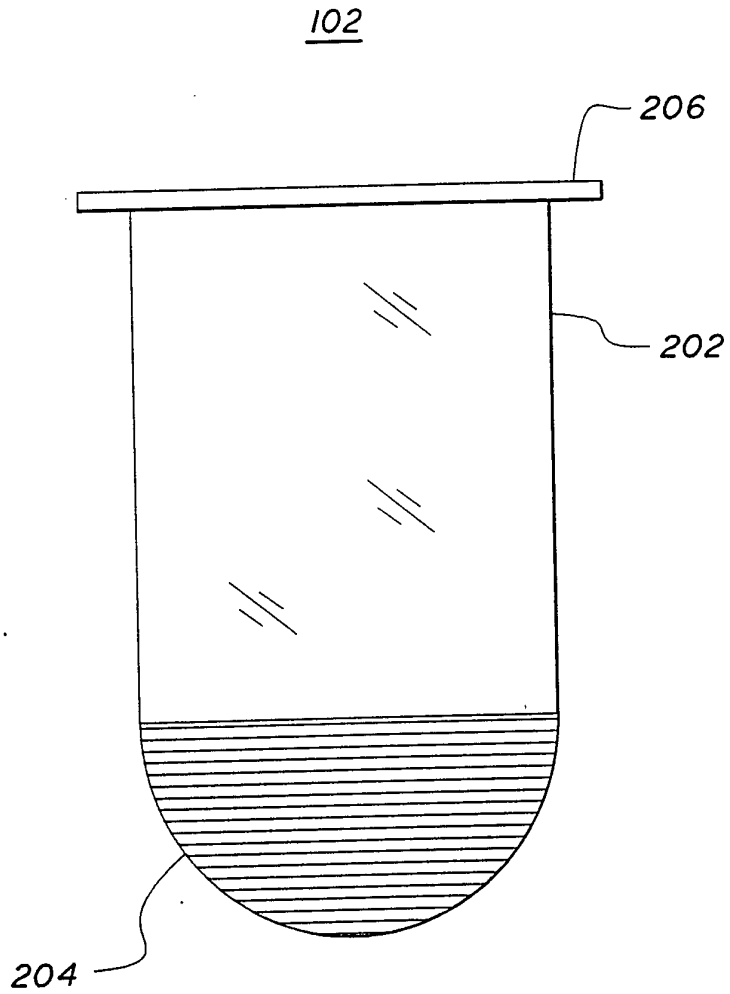

FIG. 2

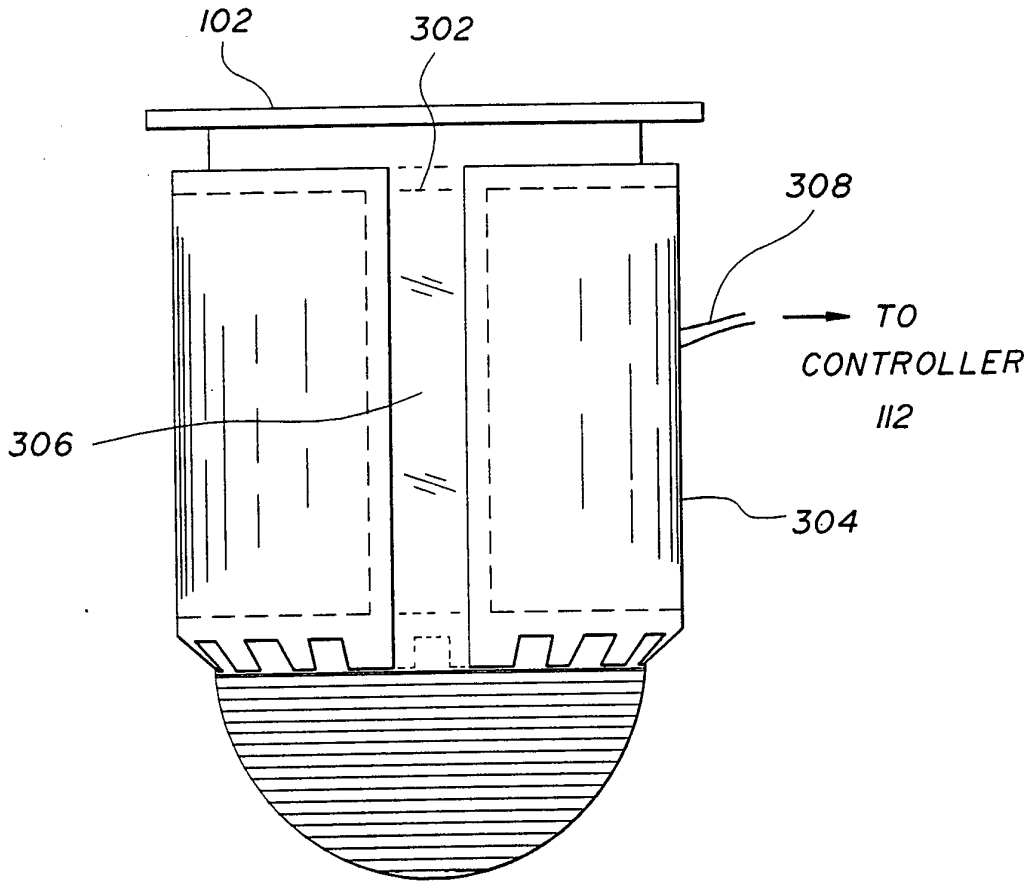

FIG. 3

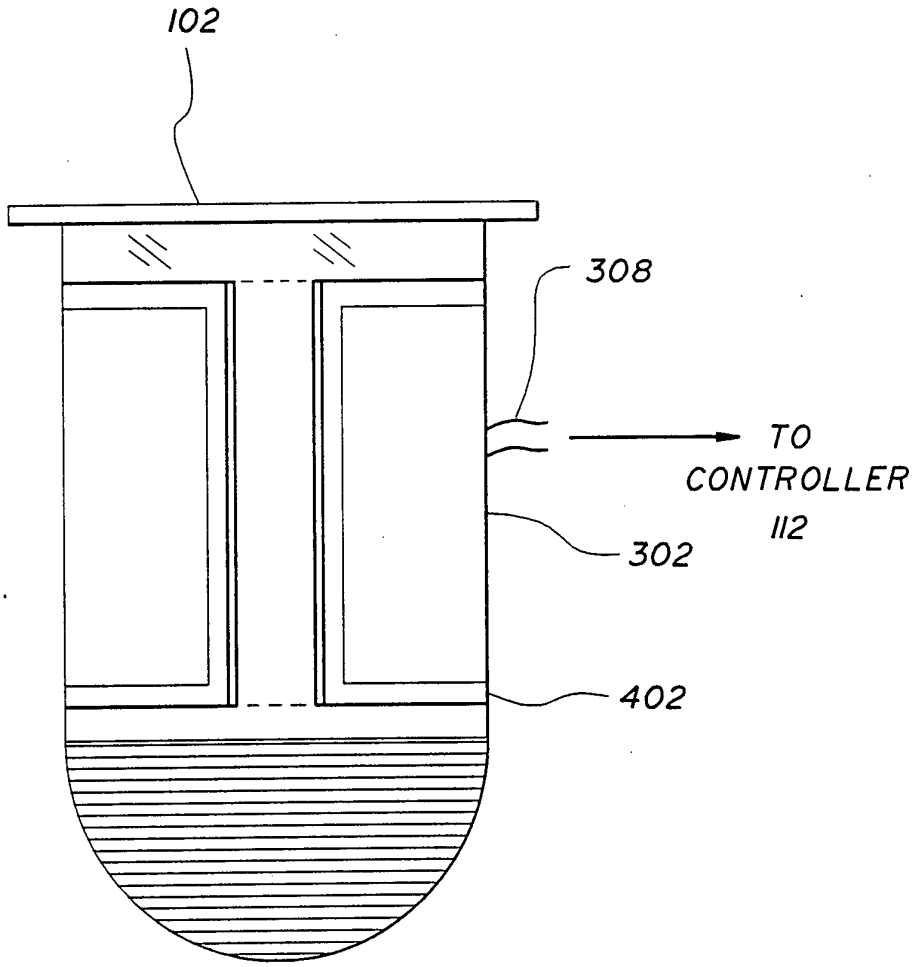

FIG. 4

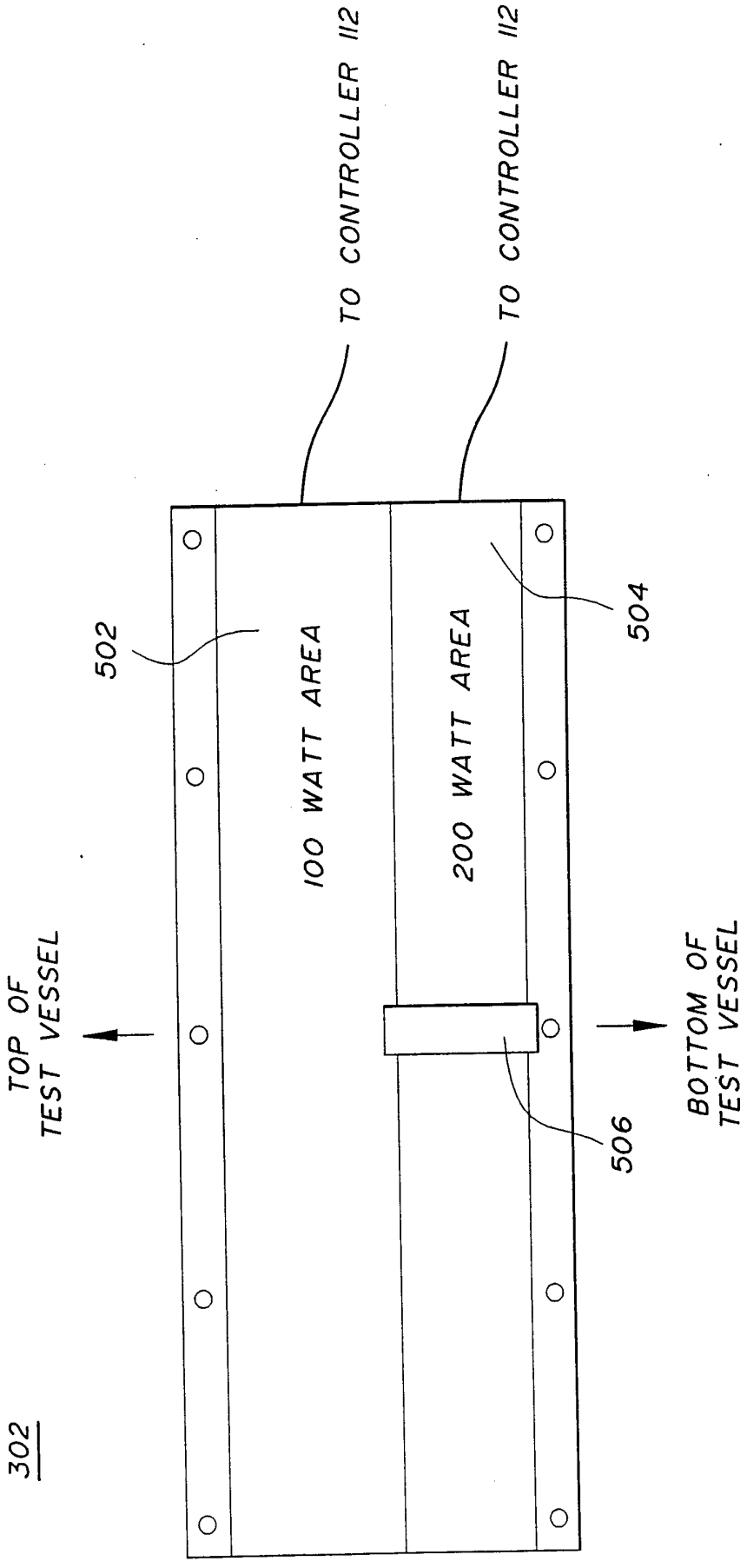
TO CONTROLLER 112
TO CONTROLLER 112
502
504
100 WATT AREA
200 WATT AREA
TOP OF TEST VESSEL
BOTTOM OF TEST VESSEL
506
302

FIG. 5

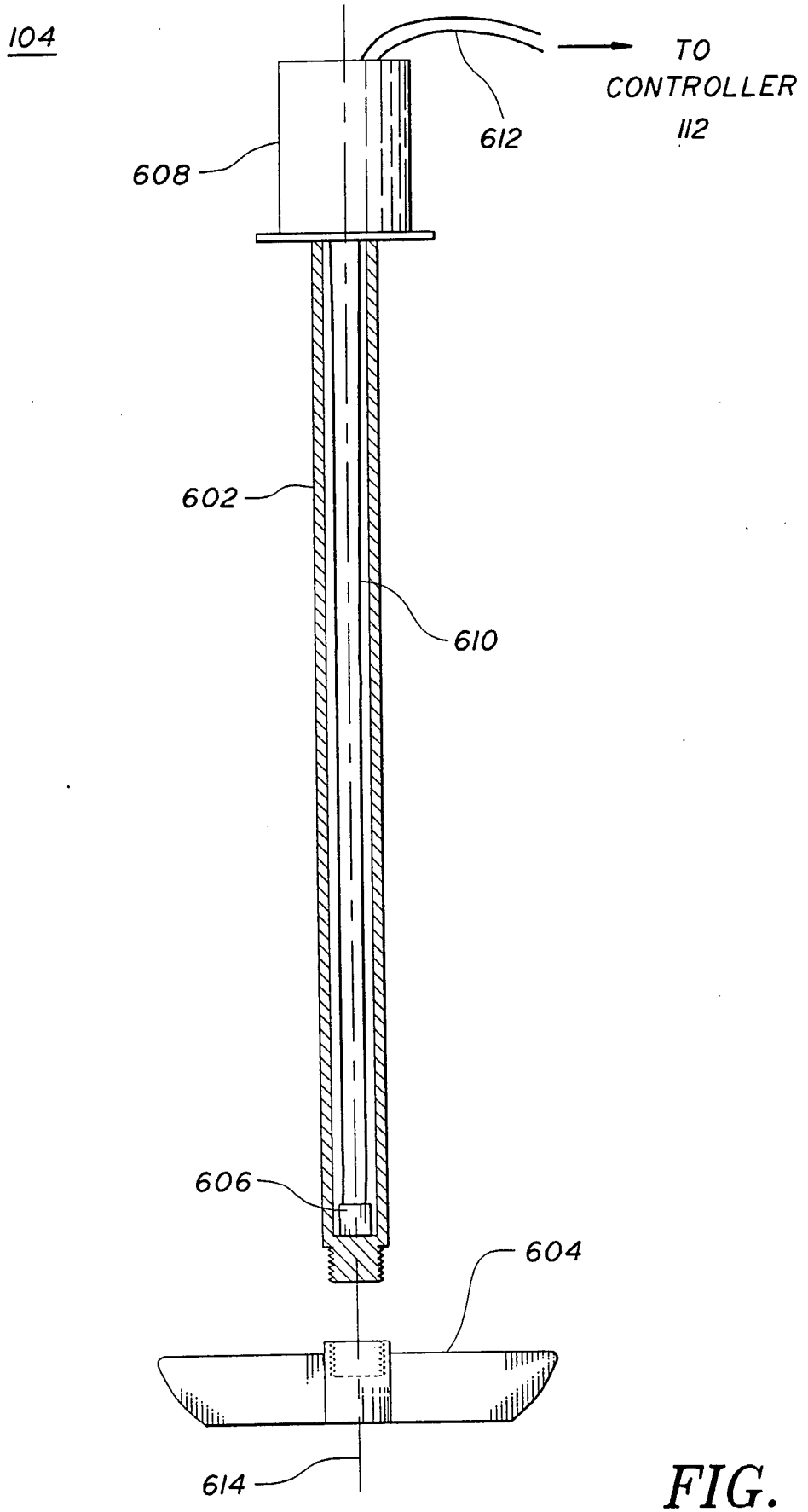

FIG. 6

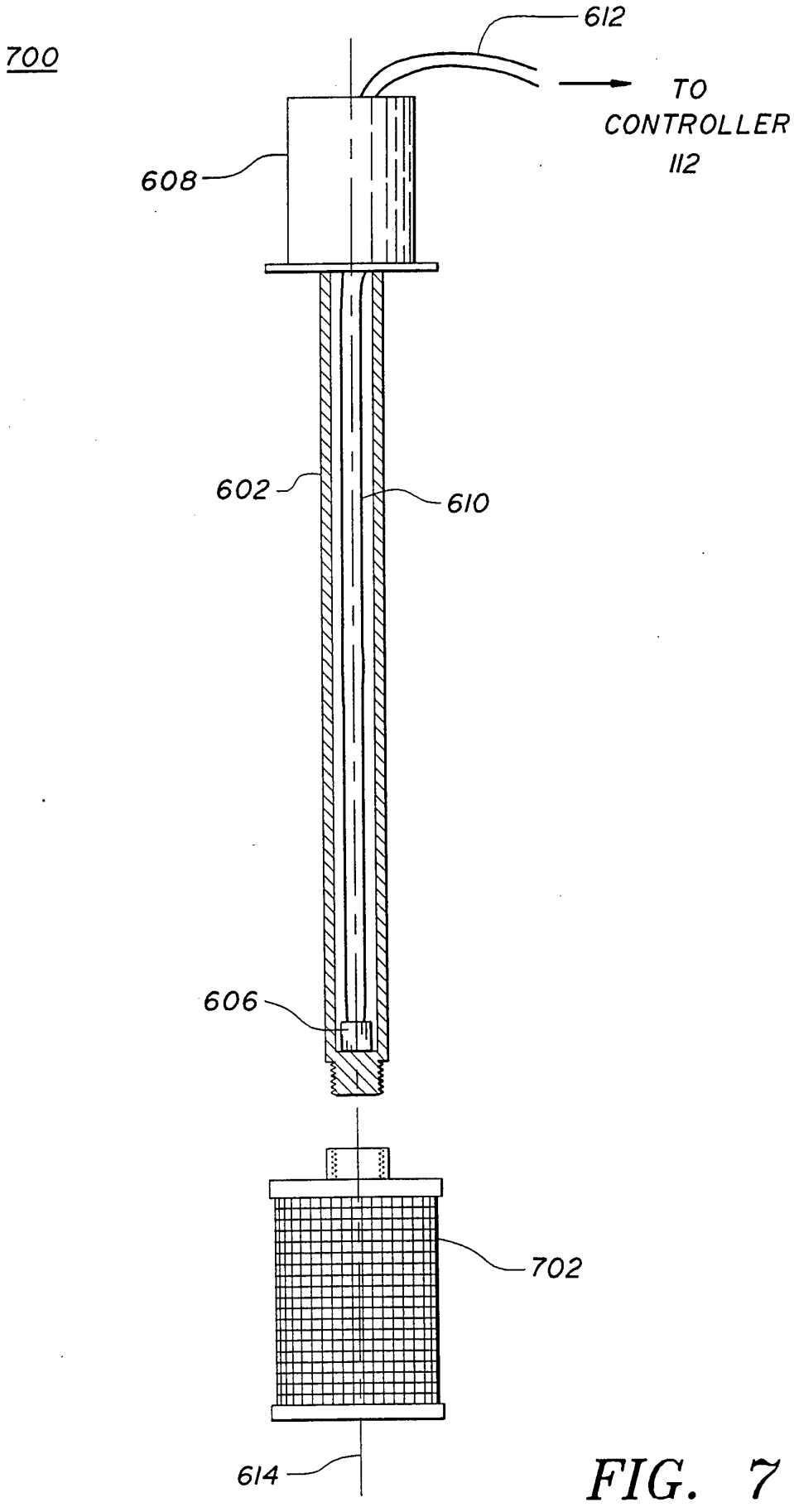

FIG. 7

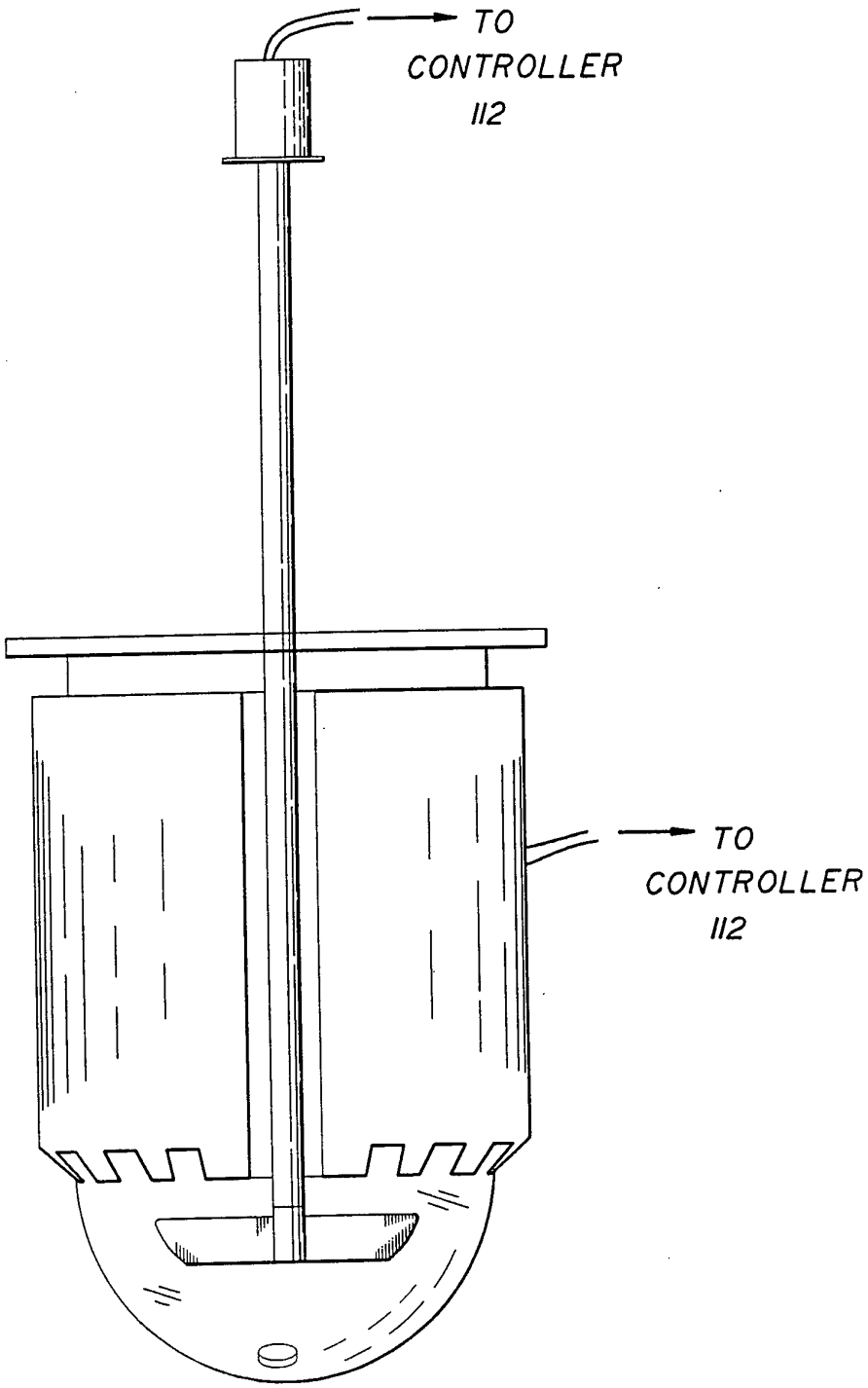

FIG. 8

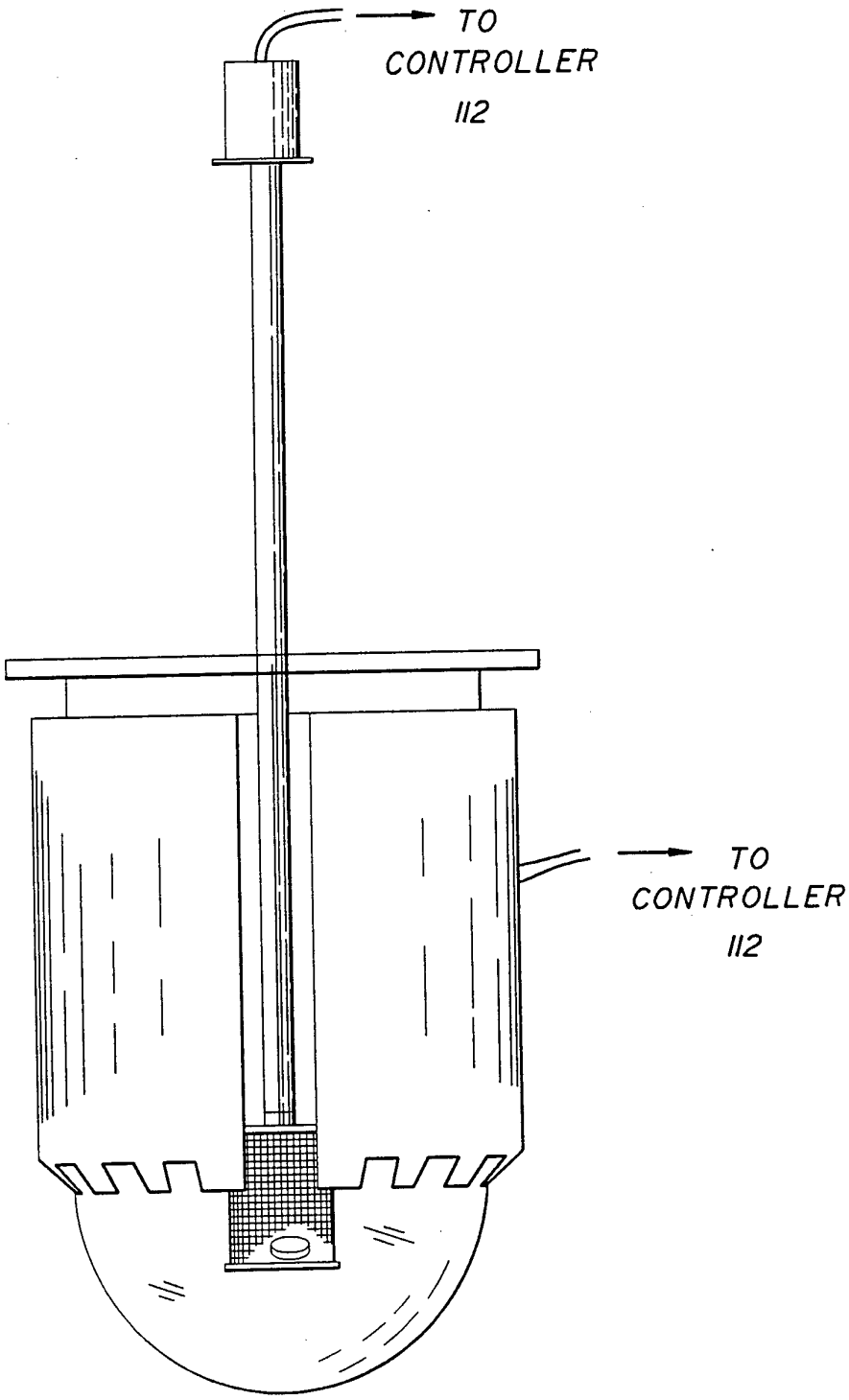

FIG. 9

FIG. 10. PADDLE-TYPE DISSOLUTION TEST PROCEDURE

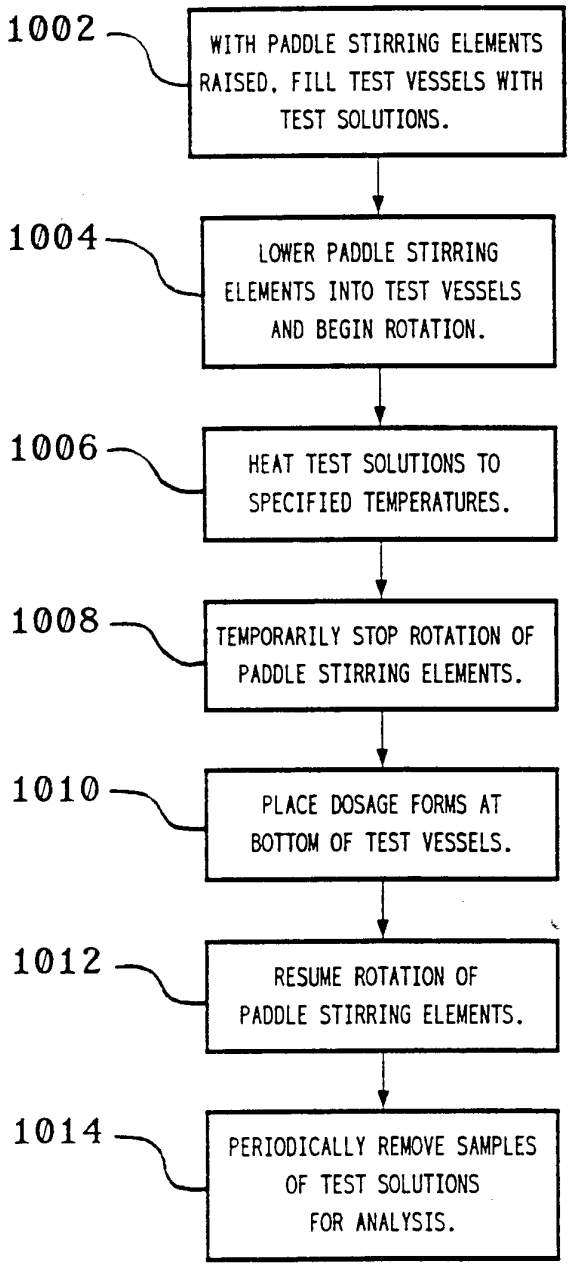

FIG. 11. BASKET-TYPE DISSOLUTION TEST PROCEDURE

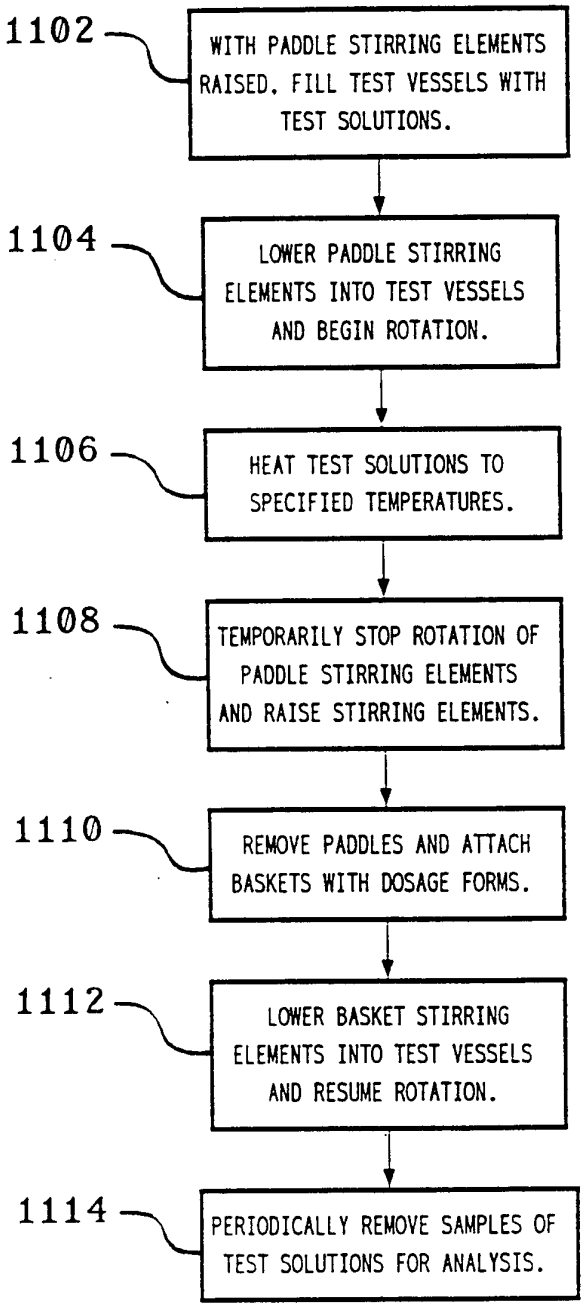

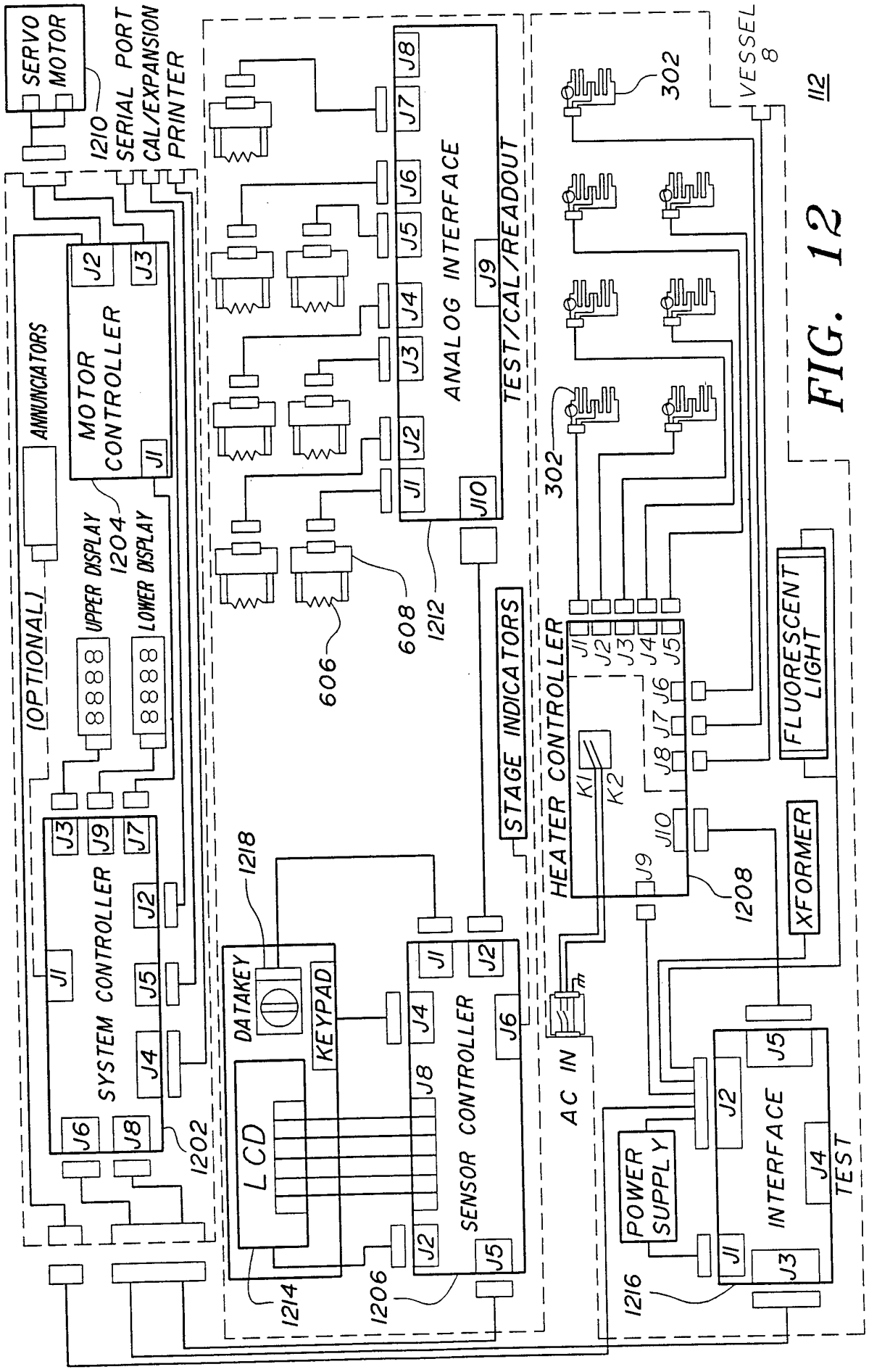
SERVO MOTOR
1210
SERIAL PORT
CAL/EXPANSION
PRINTER
ANNUNCIATORS
(OPTIONAL)
MOTOR CONTROLLER
J1
J2
J3
UPPER DISPLAY
1204
LOWER DISPLAY
8888
8888
SYSTEM CONTROLLER
J1
J2
J3
J4
J5
J6
J7
J8
J9
1202
1218
DATAKEY
KEYPAD
LCD
1214
1206
SENSOR CONTROLLER
ANALOG INTERFACE
TEST/CAL/READOUT
606
608
1212
STAGE INDICATORS
HEATER CONTROLLER
K1
K2
AC IN
302
VESSEL 8
FLUORESCENT LIGHT
XFORMER
1208
POWER SUPPLY
1216
INTERFACE
TEST
112

FIG. 12

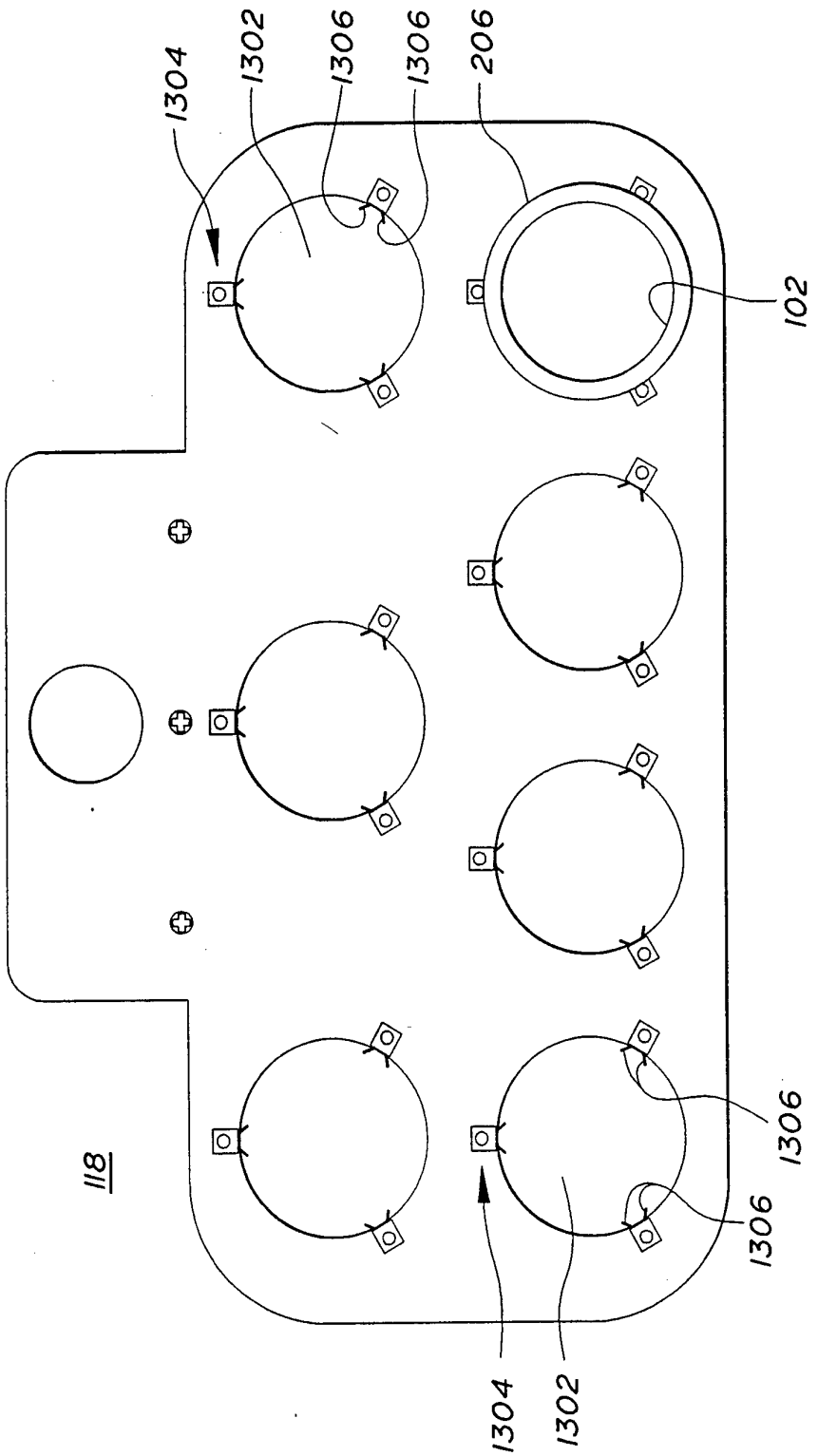

FIG. 13

INTERNATIONAL SEARCH REPORT

Intern al Application No
PCT/US 95/00692

A. CLASSIFICATION OF SUBJECT MATTER
IPC 6 G01N13/00 B01L7/00

According to International Patent Classification (IPC) or to both national classification and IPC

B. FIELDS SEARCHED

Minimum documentation searched (classification system followed by classification symbols)
IPC 6 G01N B01L

Documentation searched other than minimum documentation to the extent that such documents are included in the fields searched

Electronic data base consulted during the international search (name of data base and, where practical, search terms used)

C. DOCUMENTS CONSIDERED TO BE RELEVANT

Category °	Citation of document, with indication, where appropriate, of the relevant passages	Relevant to claim No.
X Y	US,A,4 754 657 (SCHNEIDER ORTWIN) 5 July 1988 see the whole document	1 2,3,5-7, 9-11,13, 16,21, 26,36 48,53
A	---	
X Y	US,A,5 023 187 (KOEBLER DOUGLAS J ET AL) 11 June 1991 see column 5, line 57 - line 67	54 2,21,26, 34
A	---	12,47
Y A	US,A,3 109 913 (GALAJDA JOHN E) 5 November 1963 see column 2, line 70 - column 3, line 22; figure	3,11,13, 16,32,33 22,23, 45,46,53
	--- -/--	

[X] Further documents are listed in the continuation of box C.

[X] Patent family members are listed in annex.

° Special categories of cited documents :

"A" document defining the general state of the art which is not considered to be of particular relevance

"E" earlier document but published on or after the international filing date

"L" document which may throw doubts on priority claim(s) or which is cited to establish the publication date of another citation or other special reason (as specified)

"O" document referring to an oral disclosure, use, exhibition or other means

"P" document published prior to the international filing date but later than the priority date claimed

"T" later document published after the international filing date or priority date and not in conflict with the application but cited to understand the principle or theory underlying the invention

"X" document of particular relevance; the claimed invention cannot be considered novel or cannot be considered to involve an inventive step when the document is taken alone

"Y" document of particular relevance; the claimed invention cannot be considered to involve an inventive step when the document is combined with one or more other such documents, such combination being obvious to a person skilled in the art.

"&" document member of the same patent family

Date of the actual completion of the international search	Date of mailing of the international search report
11 May 1995	02. 06. 95

Name and mailing address of the ISA	Authorized officer
European Patent Office, P.B. 5818 Patentlaan 2 NL - 2280 HV Rijswijk Tel. (+31-70) 340-2040, Tx. 31 651 epo nl, Fax: (+31-70) 340-3016	Bindon, C

Form PCT/ISA/210 (second sheet) (July 1992)

INTERNATIONAL SEARCH REPORT

Intern· ·al Application No
PCT/US 95/00692

C.(Continuation) DOCUMENTS CONSIDERED TO BE RELEVANT

Category °	Citation of document, with indication, where appropriate, of the relevant passages	Relevant to claim No.
A	US,A,4 704 035 (KOWALCZYK JAMES E) 3 November 1987 see abstract ---	4,13,22, 23,32, 33,53
X	US,A,4 681 858 (CHAUDHARI ET AL) 21 July 1987	31,35
Y	see column 3, line 25 - line 55; figure 1	5,6, 32-34,36
A		14,15, 24,25, 44,53

Y	GB,A,757 616 (CURTIS HARRY) 19 September 1956	7,9
A	see page 1, line 68 - page 2, line 47; figure 1	17,19, 27,29, 37,39, 49,51,53

Y	US,A,3 092 704 (DE WOODY ET AL) 4 June 1963	10
A	see column 2, line 45 - column 3, line 45; figure 1	8,18,20, 28,30, 38,40, 50,52,53

A	WO,A,92 10294 (MANNINEN A P) 25 June 1992 see page 3, line 32 - page 5, line 3 ---	7-9, 17-19, 27-29, 37-39, 49-51,53
Y	EP,A,0 278 374 (PHARMATEST APPARATEBAU GMBH) 17 August 1988	41-43
A	see column 4, line 17 - column 6, line 39 ---	53
Y	US,A,5 080 232 (LEONCAVELLO ET AL.) 14 January 1992 see column 2, line 60 - column 3, line 47; figures 2,8-12 -----	41-43

Form PCT/ISA/210 (continuation of second sheet) (July 1992)

INTERNATIONAL SEARCH REPORT

Interr ·nal Application No
PC1/US 95/00692

Patent document cited in search report	Publication date	Patent family member(s)		Publication date
US-A-4754657	05-07-88	DE-C-	3520034	07-05-86
		WO-A-	8607453	18-12-86
		EP-A-	0224526	10-06-87
		JP-T-	63500115	14-01-88
US-A-5023187	11-06-91	US-A-	4731335	15-03-88
		CA-A-	1333467	13-12-94
		DE-D-	68914182	05-05-94
		DE-T-	68914182	13-10-94
		EP-A-	0334534	27-09-89
		JP-A-	1302135	06-12-89
		DE-A-	3630866	26-03-87
		GB-A,B	2180647	01-04-87
		JP-C-	1804588	26-11-93
		JP-B-	5011857	16-02-93
		JP-A-	62098231	07-05-87
		JP-A-	5240748	17-09-93
		JP-B-	6070603	07-09-94
		US-A-	4801431	31-01-89
		US-A-	4798706	17-01-89
		US-A-	4777020	11-10-88
US-A-3109913	05-11-63	NONE		
US-A-4704035	03-11-87	DE-A-	3729157	07-04-88
US-A-4681858	21-07-87	CA-A-	1274159	18-09-90
		GB-A,B	2191857	23-12-87
GB-A-757616		NONE		
US-A-3092704	04-06-63	NONE		
WO-A-9210294	25-06-92	FI-B-	89563	15-07-93
		AU-A-	9096091	08-07-92
EP-A-0278374	17-08-88	JP-A-	1053154	01-03-89
		US-A-	4879917	14-11-89
US-A-5080232	14-01-92	CA-A-	2016526	01-12-90